EN

MIXED-FLOW INLINE FAN
USER'S MANUAL



TT

VENTS

www.ventilation-system.com

CONTENTS

Delivery set 6
Brief description 6
Fan modifications 6
Operation guidelines 7
Designation key 8
Mounting 9
Maintenance 12
Transportation and storage rules 12
Manufacturer's warranty 13

This user's manual is a main operating document intended for technical, maintenance, and operating staff. The manual contains information about purpose, technical details, operating principle, design, and installation of the TT unit and all its modifications.
Technical and maintenance staff must have theoretical and practical training in the field of ventilation systems and should be able to work in accordance with workplace safety rules as well as construction norms and standards applicable in the territory of the country.

Connection to the mains must be made through a disconnecting device, which is integrated into the fixed wiring system in accordance with the wiring rules for design of electrical units, and has a contact separation in all poles that allows for full disconnection under overvoltage category III conditions.

This unit is not intended for use by persons (including children) with reduced physical, sensory or mental capabilities, or lack of experience and knowledge, unless they have been given supervision or instruction concerning use of the unit by a person responsible for their safety.
Children should be supervised to ensure that they do not play with the unit.
This appliance can be used by children aged from 8 years and above and persons with reduced physical, sensory or mental capabilities or lack of experience and knowledge if they have been given supervision or instruction concerning use of the appliance in a safe way and understand the hazards involved.
Cleaning and user maintenance shall not be done by children without supervision.
Children shall not play with the appliance.

If the supply cord is damaged, it must be replaced by the manufacturer, its service agent, or similarly qualified persons in order to avoid a safety hazard.

CAUTION: In order to avoid a safety hazard due to inadvertent resetting of the thermal cut-out, this unit must not be supplied through an external switching device, such as a timer, or connected to a circuit that is regularly switched on and off by the utility.

Ensure that the unit is switched off from the supply mains before removing the guard.

Precautions must be taken to avoid the back-flow of gases into the room from the open flue of gas or other fuel-burning appliances.

The appliance may adversely affect the safe operation of appliances burning gas or other fuels (including those in other rooms) due to back flow of combustion gases. These gases can potentially result in carbon monoxide poisoning. After installation of the unit the operation of flued gas appliances should be tested by a competent person to ensure that back flow of combustion gases does not occur.

All operations described in this manual must be performed by qualified personnel only, properly trained and qualified to install, make electrical connections and maintain ventilation units.
Do not attempt to install the product, connect it to the mains, or perform maintenance yourself.
This is unsafe and impossible without special knowledge.
Disconnect the power supply prior to any operations with the unit.
All user's manual requirements as well as the provisions of all the applicable local and national construction, electrical, and technical norms and standards must be observed when installing and operating the unit.
Disconnect the unit from the power supply prior to any connection, servicing, maintenance, and repair operations.
Connection of the unit to power mains is allowed by a qualified electrician with a work permit for the electric units up to 1000 V after careful reading of the present user's manual.
Check the unit for any visible damage of the impeller, the casing, and the grille before starting installation. The casing internals must be free

of any foreign objects that can damage the impeller blades.
While mounting the unit, avoid compression of the casing!
Deformation of the casing may result in motor jam and excessive noise.
Misuse of the unit and any unauthorised modifications are not allowed.
Transported air must not contain any dust or other solid impurities, sticky substances, or fibrous materials.
Do not use the unit in a hazardous or explosive environment containing spirits, gasoline, insecticides, etc.
Do not close or block the intake or extract vents in order to ensure the efficient air flow.
Do not sit on the unit and do not put objects on it.
The information in this user's manual was correct at the time of the document's preparation.
The Company reserves the right to modify the technical characteristics, design, or configuration of its products at any time in order to incorporate the latest technological developments.

Never touch the unit with wet or damp hands.
Never touch the unit when barefoot.
Do not install or use the product until all construction and finishing work has been completed in the room where it is to be installed.
BEFORE INSTALLING ADDITIONAL EXTERNAL DEVICES, READ THE RELEVANT USER MANUALS.

DELIVERY SET

Fan: 1 pc.
Screws and dowels: 4 pcs.
User's manual: - 1 pc.
Packing box: 1 pc.

BRIEF DESCRIPTION

The unit described herein is an mixed-flow fan for supply or exhaust ventilation of premises.
The fan are designed for connection to Ø 4", 5", 6", 8", 10", 12 3/8" ducts.

FAN MODELS

TT XXX: basic model contains 2-speed-switch and power cord
XXX: spigot diameter, mm



THE PRODUCT MUST BE DISPOSED SEPARATELY AT THE END OF ITS SERVICE LIFE.
DO NOT DISPOSE THE UNIT AS UNSORTED DOMESTIC WASTE.

	Ø D	B	H	L
TT 100	3 3/4″	6 9/16″	7 1/2″	9 11/16″
TT 125	4 13/16″	6 9/16″	7 1/2″	9 11/16″
TT 150	5 3/4″	8 3/4″	9 13/16″	11 5/8″
TT 200	7 13/16″	9 7/16″	10 1/4″	11 5/8″
TT 250	9 3/4″	11 5/16″	12 11/16″	15 1/16″
TT 315	12 3/8″	14 1/4″	16 1/16″	22 15/16″

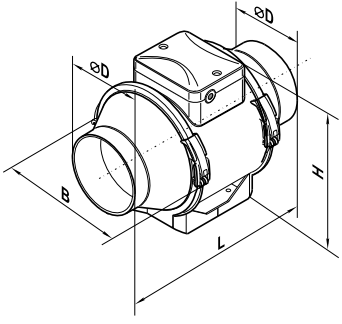

To comply with the ErP 2018 regulation, a local demand controller and speed controller must be used.

OPERATION GUIDELINES

The fan is rated for connection to single-phase ac 120 V/60 Hz power mains.
The unit is rated for continuous operation.
The unit is rated as a Class II electrical appliance.
The arrow on the fan casing must match the air direction in the system.
Ingress protection rating against access to hazardous parts and water ingress is IPX4.
The fan is rated for operation at the ambient air temperature from +34 °F up to +104 °F.
Transported air temperature — from -13 °F up to +140 °F.

MOUNTING

The fan is designed for horizontal or vertical installation on the floor, on the wall or on the ceiling (Fig. 1). The fan can be installed independently or as part of a set with parallel or in-series connection (Fig. 2).
To be installed on the intake spigot side:
• 3.28 ft long air duct in case of horizontal fan installation
• ventilation hood in case of vertical fan installation
The exhaust spigot must always be connected to the air duct.
The fan mounting steps are shown in Fig. 3–10.

MAINTENANCE

Clean the fan surfaces of dirt and dust each 6 months (Fig. 11–17).
Disconnect the fan from power supply prior to any maintenance operations.
For cleaning the fan use a soft cloth or a brush wetted in a mild detergent solution.
Avoid water dripping on the electric components (Fig. 16)!
Wipe the fan surfaces dry after cleaning.

STORAGE AND TRANSPORTATION REGULATIONS

- Store the unit in the manufacturer's original packaging box in a dry closed ventilated premise with temperature range +41...+104 °F and relative humidity up to 70 %.
- Storage environment must not contain aggressive vapors and chemical mixtures provoking corrosion, insulation, and sealing deformation.
- Use suitable hoist machinery for handling and storage operations to prevent possible damage to the unit.
- Follow the handling requirements applicable for the particular type of cargo.
- The unit can be carried in the original packaging by any mode of transport provided proper protection against precipitation and mechanical damage. The unit must be transported only in the working position.
- Avoid sharp blows, scratches, or rough handling during loading and unloading.
- Prior to the initial power-up after transportation at low temperatures, allow the unit to warm up at operating temperature for at least 3-4 hours.

MANUFACTURER'S WARRANTY

Production meets standard operating requirements in the USA and Canada.
Vents US warrants to the original purchaser of the unit that it will be free from defects in materials or workmanship for a period of 24 months from the date of original purchase. The Vents US warrants to the original purchaser of the unit that the integrated control unit will be free from defects in materials and workmanship for a period of 24 months from the date of original purchase.

THERE ARE NO OTHER WARRANTIES, EXPRESS OR IMPLIED, INCLUDING, BUT NOT LIMITED TO, IMPLIED WARRANTIES OF MERCHANTABILITY OR FITNESS FOR A PARTICULAR PURPOSE.

During the stated warranty period, Vents US will, at its option, repair or replace, without charge, any product or part which is found to be defective under normal use and service. This warranty does not cover (a) normal maintenance and normal service or (b) any products or parts which have been subject to misuse, negligence, accident, improper maintenance or repair (other than by Vents US), faulty installation or installation contrary to recommended installation instructions. Labor to remove and replace products is not covered. The duration of any implied warranty is limited to the time period specified for the express warranty. Some states do not allow limitations on how long an implied warranty lasts, so the above limitation may not apply to you.

VENTS US OBLIGATION TO REPAIR OR REPLACE, AT VENTS US OPTION, SHALL BE THE PURCHASER'S SOLE AND EXCLUSIVE REMEDY UNDER THIS WARRANTY. VENTS US SHALL NOT BE LIABLE FOR INCIDENTAL, CONSEQUENTIAL OR SPECIAL DAMAGES ARISING OUT OF OR IN CONNECTION WITH PRODUCT USE OR PERFORMANCE.

Some states do not allow the exclusion or limitations of incidental or consequential damages, so the above limitation or exclusion may not apply to you. This warranty gives you specific legal rights, and you may also have other rights which vary from state to state. This warranty supersedes all prior warranties. If proof of sales date is absent, warranty period is calculated from the production date. The unit can be exchanged at the following address:

Vents-US
400 Murray Road, Cincinnati, OH 45217, USA
Tel: 1-888-640-0925, 513-583-5786, Fax: 513-268-4597
E-mail: support@ventsus.com
www.vents-us.com

Please follow guidelines in this manual for product problem-free operation.



FOLLOWING THE REGULATIONS STIPULATED HEREIN WILL ENSURE A LONG AND TROUBLE-FREE OPERATION OF THE UNIT



USER'S WARRANTY CLAIMS SHALL BE SUBJECT TO REVIEW ONLY UPON PRESENTATION OF THE UNIT, THE PAYMENT DOCUMENT AND THE USER'S MANUAL WITH THE PURCHASE DATE STAMP

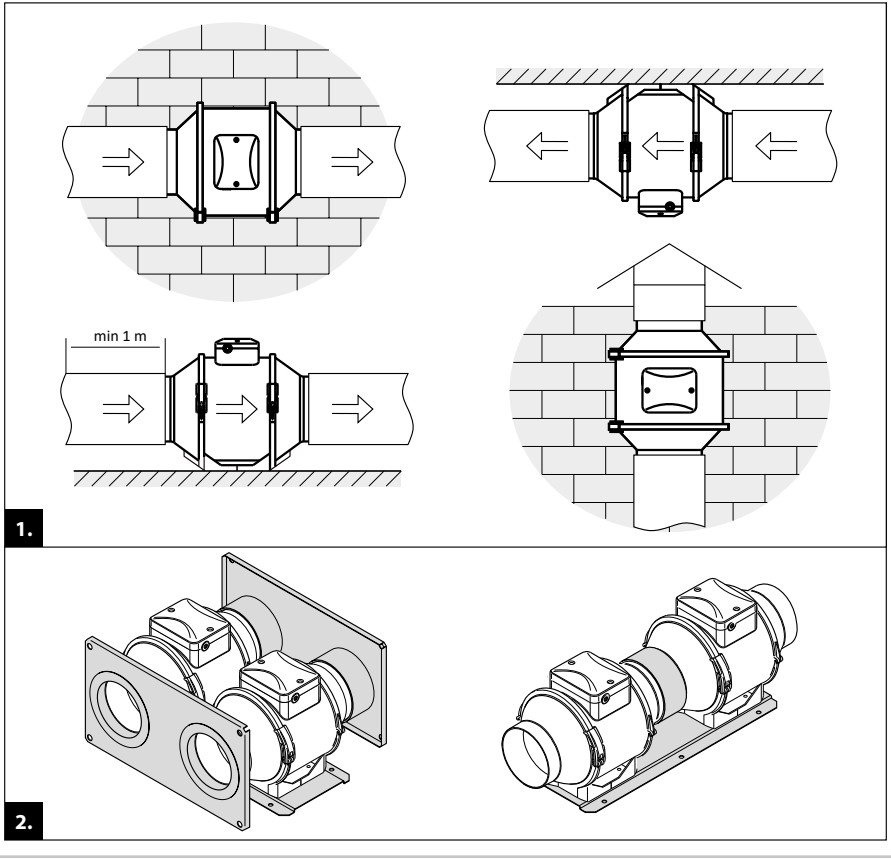
min 1 m
1.
2.

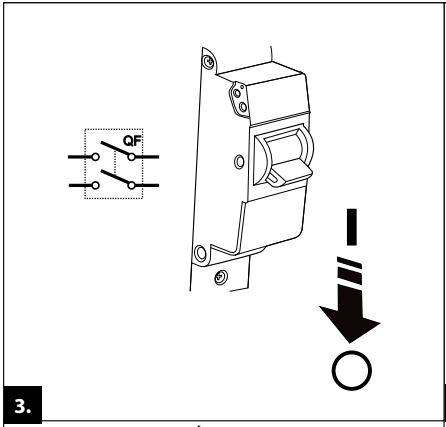

3.

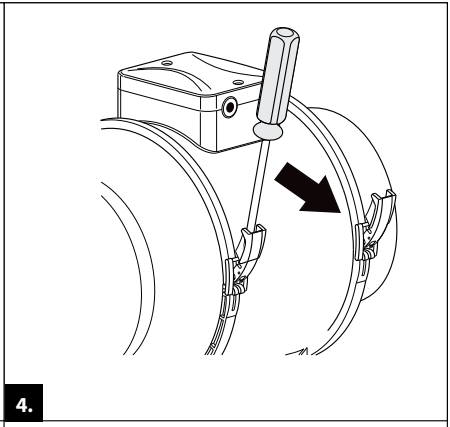

4.

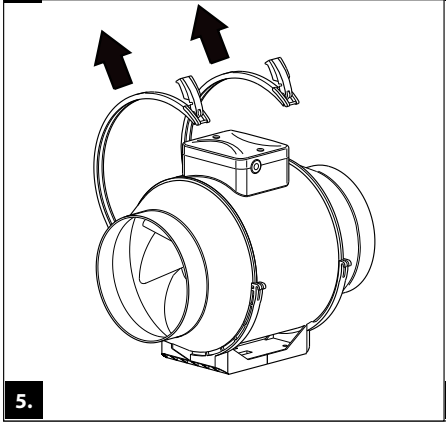

5.

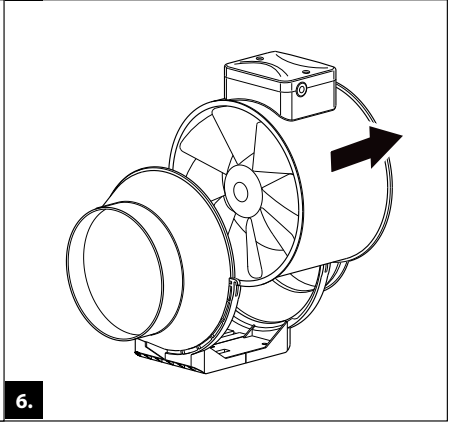

6.

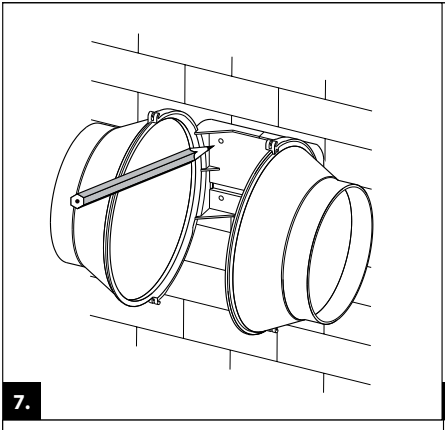

7.

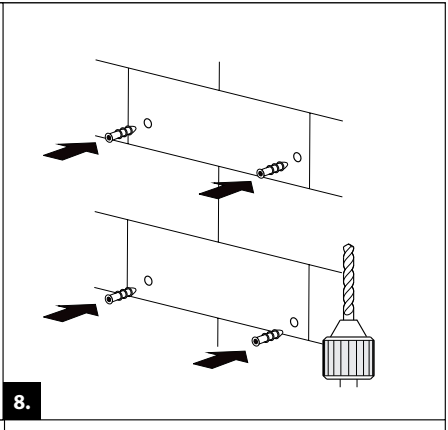

8.

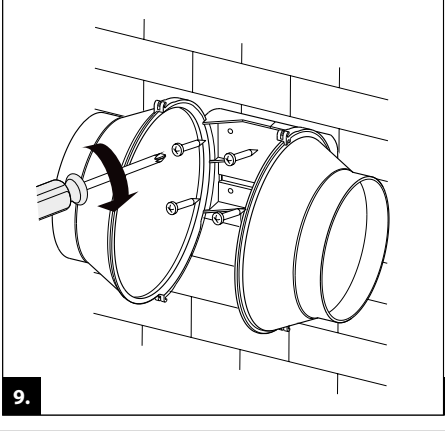

9.

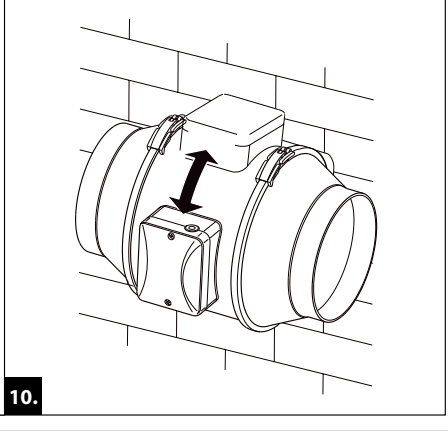

10.

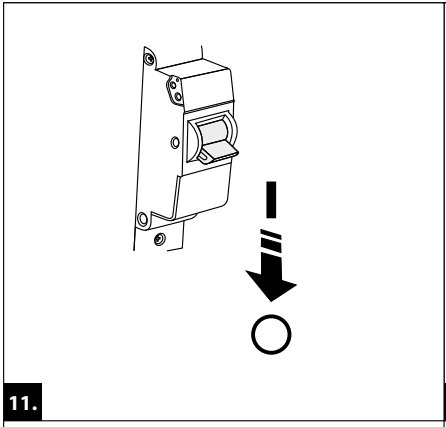

11.

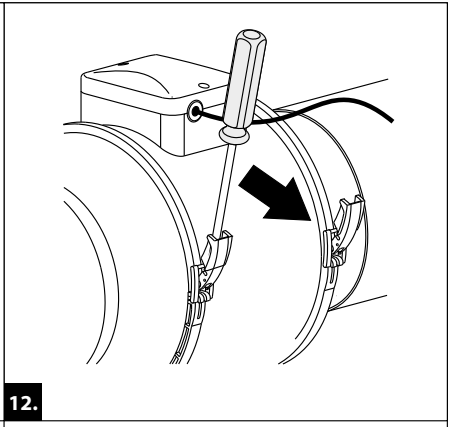

12.

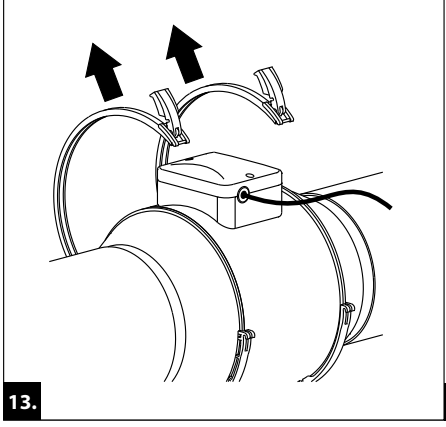

13.

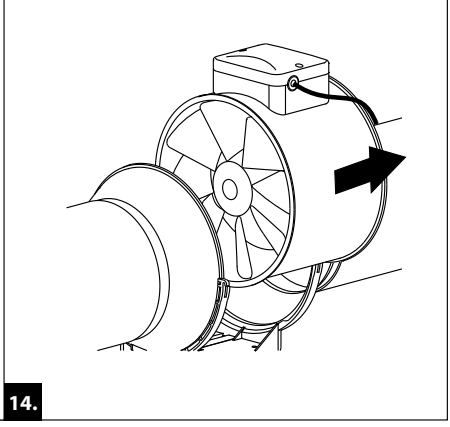

14.

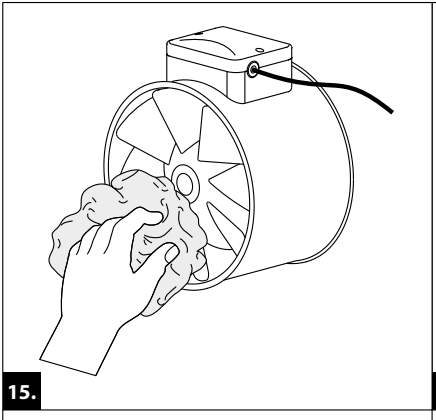

15.

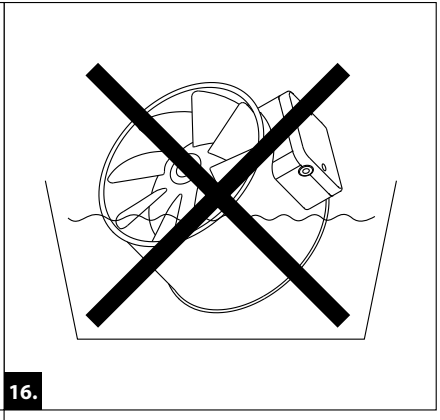

16.

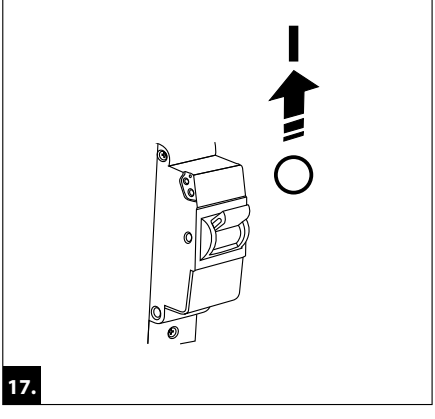

17.

Certificate of acceptance

TT _____

Quality Inspector's Stamp _____

Seller _____
(name and stamp of the seller)

_____

Purchase Date _____

The fan is recognized as serviceable.

Manufacturer: Ventilation Systems LLC,
Ukraine, Kyiv, 1 M. Kotsyubynskoho Street
Address of production facilities:
Ukraine, Kyiv Region, Fastiv District, Boyarka,
36 Sobornosti Street