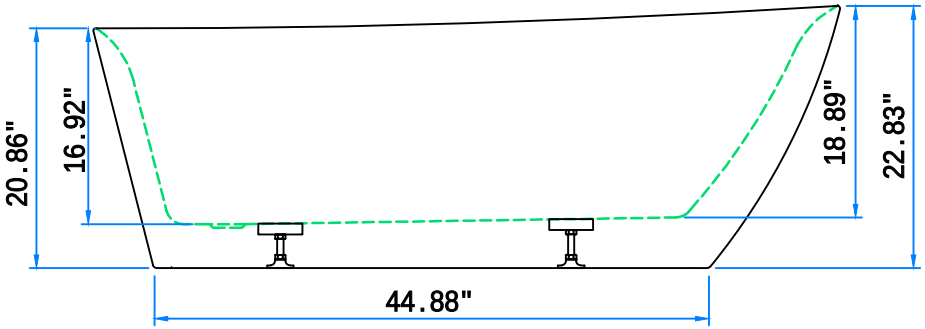
20.86"
16.92"
18.89"
22.83"
44.88"


89.8gal
77lbs

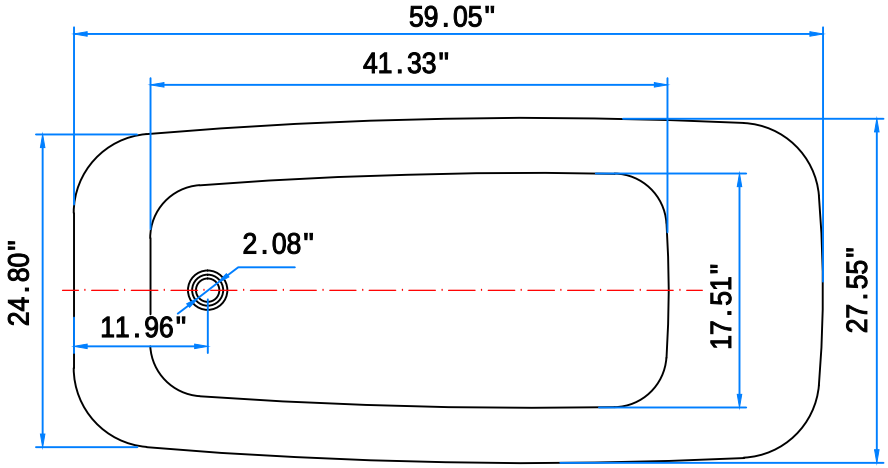
59.05"
41.33"
24.80"
2.08"
11.96"
17.51"
27.55"

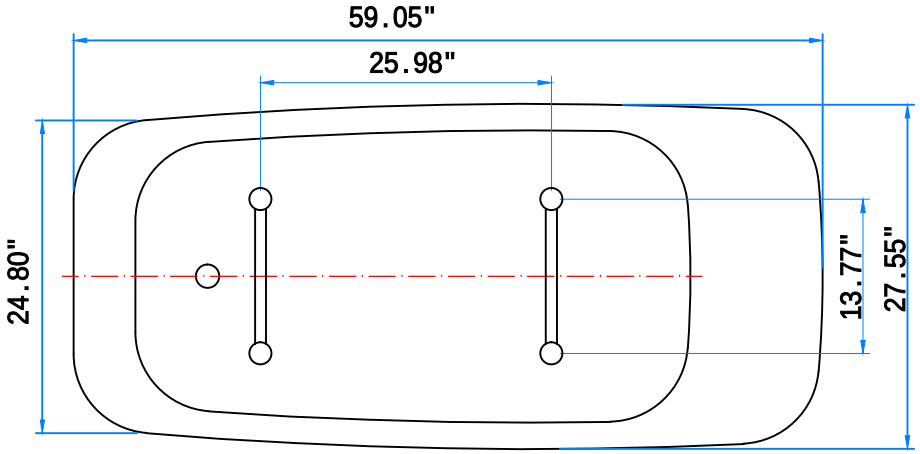
59.05"
25.98"
24.80"
13.77"
27.55"