KoolMore

USER MANUAL

OUTDOOR GRILL

KoolMore Stainless Steel Commercial Mobile Outdoor Grill Stainless Steel

Models: KM-CGM-36 | KM-CGM-48 | KM-CGM-60 | KM-CGM-72

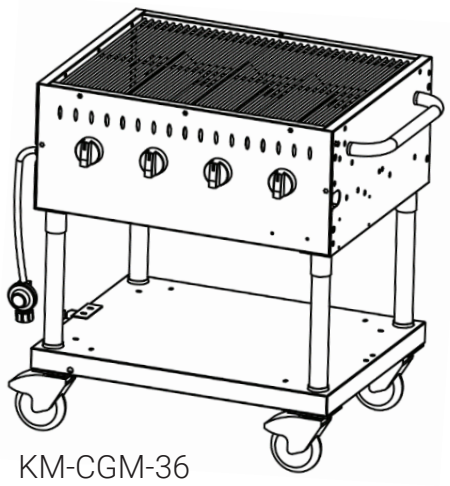

KM-CGM-36

Before using, please read the operating instructions carefully to ensure proper application and achieve satisfactory results.

For any service-related issues, please contact us:

718-576-6342 support@koolmore.com

Stay informed with the latest information for your KoolMore Appliance.

If you need any assistance or have questions, our customer support team is here to help.

⚠ WARNING

For Outdoor Use Only (outside any enclosure)

⚠ DANGER

DO NOT use gas grill for indoor cooking or heating.
TOXIC fumes can accumulate and cause asphyxiation.
Do not use in or on boats or recreational vehicles.

SAVE THESE INSTRUCTIONS FOR FUTURE REFERENCE. IF YOU ARE ASSEMBLING THIS UNIT FOR SOMEONE ELSE, LEAVE THE MANUAL WITH THE UNIT FOR FUTURE REFERENCE.

⚠ WARNING

Improper installation, adjustment, alteration, service or maintenance could cause injury or property damage. Read the installation, operation, and maintenance instructions thoroughly.

Failure to follow these instructions could result in fire or explosion that could cause property damage, personal injury, or death.

⚠ DANGER

If you smell gas:

1. Shut off gas to the appliance.
2. Extinguish any open flame.
3. Open lid.
4. If odor continues, keep away from the appliance and immediately call your gas supplier or your fire department.

Do not store or use gasoline or other flammable liquids or vapors in the vicinity of this or any other appliance.
An LP cylinder not connected for use shall not be stored in the vicinity of this or any other appliance.

FOR YOUR SAFETY

1. Do NOT store or use gasoline or any other flammable vapors and liquids within 25 feet of this or any other appliance.

2. When cooking with oil/grease, do not allow the oil/grease to exceed 350°F. Do not store or use extra drip cups in the vicinity of this or any other appliance.

An LP cylinder not connected for use should be stored a minimum of 10 feet away from this or any other appliance. Never fill the cylinder beyond 80% capacity. If the above information is not followed exactly, a fire causing death or serious injury may occur.

SAFETY

NOTE: The use and installation of this product must conform to local codes. In absence of local codes, use the National Fuel Gas Code, ANSI Z223.1/NFPA54, Natural Gas and Propane Installation Code, CSA B149.1, or Propane Storage and Handling Code, B149.2.

Read and understand all warnings and precautions prior to operating your grill.

⚠ CAUTION

1. This grill is for use with propane gas only (propane gas cylinder not included).
2. Never attempt to attach this grill to the self-contained propane system of a camper trailer, motor home or house.
3. Never use charcoal or lighter fluid with the gas grill.
4. Do not use gasoline, kerosene or alcohol for lighting. The LP-gas supply cylinder must be constructed and marked in accordance with the specifications for propane gas cylinders of the U.S. Department of Transportation (DOT) CFR 49. Or the National Standard of Canada, CAN/CSA-B339, Cylinder, Spheres and Tubes for Transportation of Dangerous Goods. This grill is not intended to be used in or installed on recreation vehicles and/or boats.
5. Do not attempt to move the grill while it is lit.
6. Do not use the grill unless it is completely assembled and all parts are securely fastened and tightened.
7. Keep all combustible items and surfaces at least 24 inches (60.9 cm) away from grill at all times.
8. DO NOT use this grill or any gas product near unprotected combustible materials.
9. Do not use in an explosive atmosphere. Keep grill area clear and free from combustible materials, gasoline and other flammable vapors and liquids.
10. Do not touch metal parts of grill until it has completely cooled (about 45 minutes) to avoid burns, unless you are wearing protective gear (grill mitt, pot holders, etc.)
11. Do not alter this grill in any manner.
12. Clean and inspect the hose before each use. If there is evidence of abrasion, wear, cuts, or leaks, the hose must be replaced prior to operating the appliance. The replacement hose assembly will be that which is specified by the manufacturer.
13. Move gas hoses as far away as possible from hot surfaces and dripping hot grease.
14. Never keep a filled container in a hot car or car trunk. Heat will cause the gas pressure to increase, which may open the relief valve and allow gas to escape.
15. Keep the grill's valve compartment, burners and air passages clean. Inspect the grill before each use.

⚠ WARNING

This grill is for outside use only, and should not be used in a building, garage, or any other enclosed area.
The use of alcohol, prescription or non-prescription drugs may impair the operator’s ability to properly assemble or safely operate the grill.

1. Always open grill lid slowly and carefully as heat and steam trapped within the grill can burn you severely.
2. Always place your grill on a hard, level surface far away from combustibles.
3. Do not leave a lit grill unattended. Keep children and pets away from the grill at all times.
4. Do not place this grill on any type of tabletop surface.
5. Do not use the grill in high winds.

DANGER:
Liquid propane gas is flammable and hazardous if handled improperly.
Know its characteristics before using any propane product.

- Propane Characteristics: Flammable, explosive under pressure, heavier than air and settles in pools and low areas.
- Contact with propane can cause frostbite to skin.
- This grill is shipped from the factory for propane gas use only.
- Never use a propane cylinder with a damaged body, valve, collar or footing.
- Dented or rusted propane cylinders may be hazardous and should be checked by your propane gas supplier.

SETUP

General Information and Instructions

Your new Grill has been designed and manufactured to high quality standards. It will provide you with many years of enjoyment with a minimal amount of maintenance. Please keep in mind the following:

FOR YOUR SAFETY

OPERATION

1. Your gas grill requires reasonable care during operation. It will be hot during cooking and cleaning. You should never leave the grill unattended or move the grill when in use.
2. Children should never use your gas grill. Keep young children and pets away when in use.
3. Only use your gas grill outside in a well-ventilated area. Never use indoors in any building, garage, shed, or under any type of flammable canopy or overhang.
4. Ensure your grill is on level ground and the locking casters are locked before use.
5. Turn all gas valves off if the burners go out when cooking.
6. Do not lean over the grill or touch the edges of the firebox, wind screen or griddle top when in use.
7. Turn the burners off and shut off the LP cylinder if a grease fire occurs.
8. Do not obstruct the flow of combustion and ventilation air to this grill.
9. Keep the outdoor grill area clear and free from combustible materials, gasoline, and other flammable vapors and liquids.
10. Keep the ventilation openings of the cylinder enclosure free and clear from debris.
11. Do not put a grill cover or other flammable material in the storage area of this grill.
12. Do not use charcoal briquettes, lava rock, or any type of ceramic product in the gas section of this grill.
13. Do not install or use on or in a recreational vehicle and/or boats.

LP Gas and Cylinder Information

Your new gas grill operates on LP (Liquid Petroleum) Gas. It is odorless, colorless, and non-toxic when produced. You can smell LP gas as it has been given an odor similar to rotten cabbage for your safety.

Your grill uses the newest and safest LP Gas Cylinder.

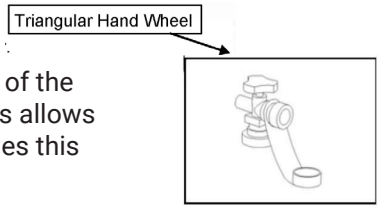

O.P.D. (Overfill Protection Device) — prevents accidental gas leaks caused by overfilling of the tank. Each tank contains a float that loses the input valve when the tank is 80% full. This allows more for the LP gas to expand in hot temperatures. A triangular hand wheel distinguishes this type of tank.

O.C.C.1 Type 1 Quick Connect Valve — provides fast tank hook-ups and requires only to be tightened by hand.

TRANSPORTATION AND STORAGE

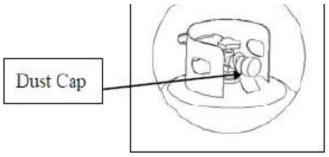

1. The cylinder used must include a collar to protect the cylinder valve.
2. Do not store a spare LP-gas cylinder under or near this appliance.
3. Never fill the cylinder beyond 80 percent full;
4. If the information in “2” and “3” is not followed exactly, a fire causing death or serious injury may occur.
5. Always transport in an upright position.
6. Do not smoke when transporting your cylinder.

7. Place dust cap on cylinder valve outlet whenever the cylinder is not in use. Only install the type of dust cap on the cylinder valve outlet that is provided with the cylinder valve. Other types of caps or plugs may result in leakage of prop.

CYLINDER SPECIFICATIONS:

When purchasing or exchanging a cylinder for your gas grill, it must be constructed and marked in accordance with the specifications for LP gas cylinders of the U.S. Department of Transportation (DOT) or the National Standard of Canada, CAN/CSA-B339 Cylinders, Spheres and Tubes for Transportation of Dangerous Goods; and Commission, as applicable; and provided with a listed over-filling prevention device (OPD), and provided with a cylinder connection device compatible with the connection for outdoor cooking appliances.

- Provided with a listed overfilling prevention device.
- Provided with a cylinder connection device compatible with connection for outdoor cooking appliances.

The cylinder must also be equipped with:

- A shut-off valve terminating in a Type 1 gas cylinder valve outlet
- A Type 1 valve that prevents gas flow until a positive seal is obtained
- An arrangement for vapor withdrawal
- A collar to protect the cylinder shut-off valve
- A safety relief device having direct communication with the vapor space of the cylinder
- A listed over-filling prevention device (OPD)

WARNING
A frosty cylinder valve indicates possible gas overfill.
Close the LP valve and call your dealer immediately.

A safety relief device having direct communication with the vapor space of the cylinder
A listed over-filling prevention device (OPD)

LP GAS CYLINDER (NOT SUPPLIED WITH THIS GRILL)

The LP cylinder is available for purchase at the same location the grill was purchased.

The LP (Liquid Propane) gas cylinder specifically designed to be used with this grill must have a 20 lb. (9.1 kg) capacity incorporating a Type 1 cylinder valve and an over-filling protection device (OPD).

This grill is designed to fit Worthington, Manchester, or SMPC brand 20 lb. (9.1 kg) cylinder.

Other brand DOT cylinders may fit this grill if the cylinder has similar dimensions of the top and bottom rings.
- DO NOT connect this grill to an existing #510 POL cylinder valve with Left Hand threads. The Type 1 valve can be identified with the large external threads on the valve outlet.
- DO NOT connect to a propane cylinder exceeding this capacity.
- DO NOT connect to a cylinder that uses any other type of valve connection device.

Other cylinders may be acceptable for use with this appliance, provided they are compatible with the appliance retaining means and accompanied by illustration depicting the cylinder mounted to the appliance utilizing the cylinder retention means and the point of contact between the cylinder and the prop.

LP CYLINDER LEAK TEST

A leak test should be done each time a cylinder is refilled or exchanged. Do not smoke or use any type of flammable material in the area during this leak test.
Do not use an open flame to check for leaks.

1. Test outside in a well-ventilated area.
2. Use a paintbrush and a solution of 50% liquid soap and 50% water. Do not use cleaning agents. They can damage the fuel supply parts.

3. Brush liquid onto areas highlighted with arrows.
4. Growing bubbles indicate a leak.

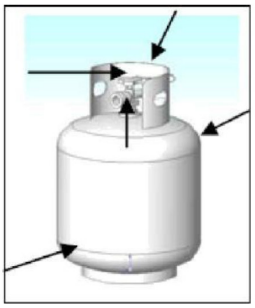

Regulator and LP Cylinder Connections

CAUTION
The gas pressure regulator provided with this outdoor cooking appliance must be used. This regulator is set for an outlet pressure of 11 inches water column.

Your regulator is equipped with a Q.C.C. Type 1 quick connect system. It will not allow gas to flow until a positive seal has been made. It has a thermal element that will shut off the gas flow if the temperature reaches 240 degrees F (115 degrees C). It also has a flow-limiting device that will restrict the flow of gas to 10 cubic feet per hour (0.28 cubic meters per hour).

Before each use, check the gas hose for excessive abrasion or wear, or cuts. Replace a hose assembly showing those signs with the hose assembly specified in the parts list before using the grill.

TO CONNECT THE CYLINDER TO THE REGULATOR AND HOSE

1. Be sure the LP cylinder is “OFF” by turning the hand wheel clockwise until it stops.
2. Place the cylinder on the hook beside the body with the valve facing outward. See Assembly
3. Be sure all burner controls are turned to the “Off” position.
4. Remove the safety cap from the cylinder valve.
5. Center the nipple of the regulator into the cylinder valve.
6. Turn the black nut clockwise until it stops.

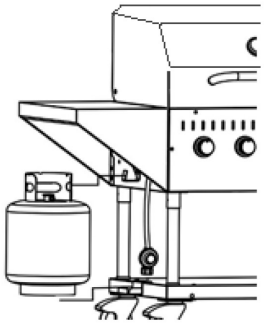

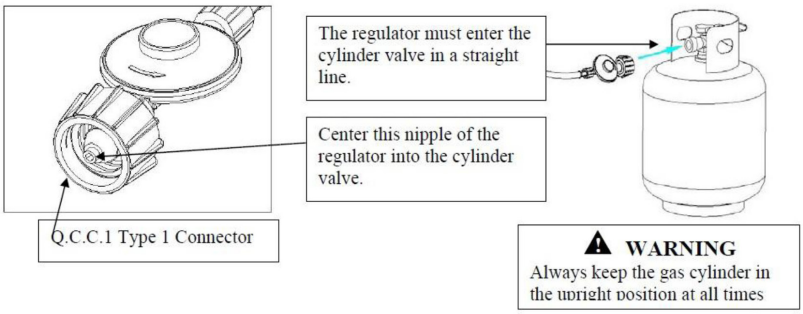

⚠ WARNING

1. Do not connect this grill to any unregulated sources of propane.
2. Before each use, check the gas hose for excessive abrasion, wear, or cuts. Replace a hose assembly showing those signs with the hose assembly specified in the parts list before using the grill.
3. Always perform the Leak Test listed below before using your grill for the first time after the cylinder has been changed, any gas components have been changed, the regulator flow-limiting device has been activated, or after a long period of non-use.
4. Do not attempt to connect this grill to the LP system of a motor home or trailer.

LEAK TESTING THE REGULATOR, VALVES, HOSES, AND CONNECTIONS

1. Ensure the LP cylinder valve and all burners are “Off”.
2. Ensure the LP cylinder is connected to the regulator.
3. If the information in 1 & 2 is not followed exactly, a fire causing death or serious injury may occur.
4. Mix a solution of 50% water and 50% liquid dish soap. Do not use any household cleaning solution.

5. Open the LP tank valve by turning the hand wheel counterclockwise one turn. If you hear a rushing sound, turn the gas off immediately. In that case, there could be a leak at the connection. Reconnect the cylinder to the regulator.
6. Spray or brush on the solution covering the following areas: regulator and cylinder connection, gas hose connections to the regulator, all gas hoses, all gas hose connections to the burners, including the main and side burners.
7. Growing bubbles on any of the parts and connections listed above indicate a gas leak. Immediately shut off the LP tank valve by turning the valve clockwise. Re-tighten the connections or order replacement parts as needed. Continue to test as necessary until no leaks are detected.
8. Close the LP tank valve by turning the hand wheel clockwise.

⚠ WARNING

1. DO NOT USE THE GRILL if you cannot stop the leaks. Be sure the LP cylinder valve is closed. If the LP cylinder is still leaking, contact your LP dealer or local fire department.
2. Do not use any match or open flame, or smoke, during leak testing.
3. Do not light a burner during leak testing.
4. The replacement hose assembly must be the one identified.

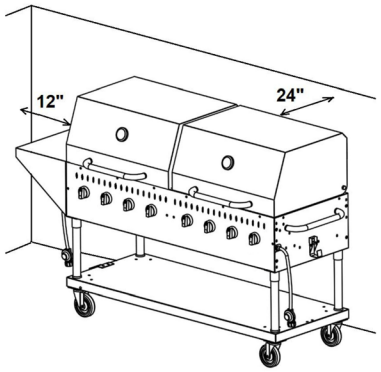

FOR YOUR SAFETY

1. Minimum clearance from sides and back of unit to adjacent combustible construction below top of unit, 12 inches from sides and 24 inches from back.

2. Do not locate this outdoor cooking gas appliance under overhead unprotected combustible surfaces.

APARTMENT RESIDENTS
Check with your apartment manager regarding your regulations for grills.

⚠ WARNING

1. Do not use this grill in any enclosed area, garage, shed, or under any type of overhead structure or canopy.

2. Operate this grill only in a well-ventilated area.

Keep any electrical supply cord and the fuel supply hose away from any heated surfaces and water.

Do not face the grill directly into the wind.

OPERATION

LIGHTING

Always visually inspect your grill before lighting. Replace any hoses that are frayed or cracked before lighting your grill. Look for anything that may be blocking spaces for ventilation and remove.

After lighting, always check the flame to ensure you have a good flame all along each burner. If not able to light, or the flame is not even along the entire burner(s), then see the Troubleshooting.

WARNING

1. Read instructions before lighting.
2. If ignition does not occur in 5 seconds, turn the burner control(s) off, wait 5 minutes and repeat the lighting procedure.

LIGHTING THE MAIN BURNERS USING ELECTRONIC IGNITION

1. Ensure all burner control knobs are in the “Off” position.
2. Turn on the LP gas by turning the hand wheel on the cylinder valve counter-clockwise.
3. Turn one burner control knob marked with an igniter flame to “High”.
4. Depress the electronic ignition button and hold down. You should hear a clicking sound, which shows the electronic ignition is working.
5. If the burner does not light within 5 seconds, turn the burner control knob to “Off”. Wait 5 minutes for the gas to clear, and repeat the above procedure. Use the manual directions if it still will not light.
6. When lit, turn the control knob to the desired setting.

MANUALLY LIGHTING THE BURNERS WITH A MATCH

1. Ensure all burners are in the “Off” position.
2. Slowly turn on the gas at the LP tank valve if it is not already on.
3. Place a match in the Match Holder. This is located in the top center drawer of the grill cabinet underneath the right main burner.
4. Use the holder to slide the lit match through the cooking grates and the front of the heat tent to the left of the burner you wish to light.
5. Press and turn the burner control knob to “HI/LIGHT”. Continue to push in and hold up to 5 seconds or until the burner lights.
6. If the burner does not light within 5 seconds, turn the burner control knob to “OFF”. Wait 5 minutes for gas to clear, and try again.
7. When lit, turn the control knob to the desired heat setting.

TURNING OFF YOUR GRILL

1. Turn off the gas supply at the LP tank by turning the valve clockwise.
2. Turn all burner control knobs to the “Off” position.

CLEANING YOUR GRILL

WARNING

1. Do not clean any part of your grill in a self-cleaning oven.
2. Do not use oven cleaners, abrasive kitchen cleaners, cleaners that contain citrus products, or mineral spirits.
3. Do not use any type of steel bristled brush.

4. Clean your grill regularly to prohibit grease build-ups and avoid a grease fire or excessive flare-ups.
5. Always allow the grill to cool down prior to cleaning.

STAINLESS STEEL — Clean with multipurpose low abrasive non-phosphorous metal or stainless steel polish and a soft cloth. Always polish in the direction of the lines. Do not allow grease and dirt to accumulate. In addition, the following products and naturally occurring substances in the outdoors will damage all stainless steel finishes. Use caution so that they do not come in contact with your Gas Grill. Immediately wash them off and dry the stainless steel should they ever come in contact with your Gas Grill. This includes, but is not limited to, Pool Chemicals (chlorine and bromine), Lawn Fertilizer, Ice Melting Salts, Sea or Salt Water, Urine, Bird Droppings, and Tree Sap.

OTHER EXTERIOR SURFACES — Wash with a mild dish soap and warm water. A cloth, soft brush, or plastic cleaning pad can be used. Rinse thoroughly and wipe dry.

COOKING GRATES AND HEAT DIFFUSERS — Use a stiff brass brush. Wash with warm water and mild dish soap as needed, rinse, and dry.

GREASE PAN AND TRAY — Check after each use. Remove and empty the tray when half full. Remove and clean the pan as grease builds up. Both can be washed with warm water and mild dish soap.

WARNING
Small insects, such as spiders, are able to access the burner tubes. Sometimes they will build nests or spin webs. In either case, this can block or reduce the amount of gas flowing through the burner. You will usually see a smaller flame, or a flame that is mostly yellow rather than blue, coming from the burner when this happens. Other signs include the grill not heating evenly, not reaching temperature, or burners not igniting. In cases with severe blockage, this can cause the flame to burn backwards, and outside of the burner tubes, which can cause damage to your grill and/or personal injury. IMMEDIATELY SHUT OFF THE FLOW OF LP GAS AT THE CYLINDER BY TURNING THE HAND WHEEL CLOCKWISE SHOULD THIS HAPPEN. Wait for the grill to cool, and then clean all burners.

CLEANING THE BURNERS

1. Ensure the LP gas is turned off at the LP cylinder.
2. Remove the cooking grates, flame tamer, and grease tray.
3. Remove the cotter pins located underneath the back end of each burner.
4. Lift each burner up and out.
5. Clean the inside of the burner using a stiff wire. A straightened coat hanger is one suggested tool. An alternative way to clean the inside of the burner is using compressed air. Always wear eye protection if using this method. Never enlarge the burner ports during cleaning.
6. Brush the outer surface of the burner.
7. Ensure all ports (holes) are free of all debris.
8. Inspect the burner. Replace if any cracks or enlarged holes.
9. Reinstall the burners making sure the burners seat over the valves as shown in the figure to the right.

WARNING
Properly locating the burner with respect to the orifice is vital for safety.

1. Secure the back of the burners to the firebox with the cotter pins.
2. Replace the grease tray, flame tamer, and cooking grates.
3. Perform a Leak Test described earlier in this guide.

BURNER FLAMES
Always inspect the burner flame after lighting. A good flame should be primarily blue with a yellow tip and have a minimal amount of noise. Some yellow tips are OK if under one inch. New burners sometimes have oil residue, which will cause yellow flame when burning off. Variations in gas supply, altitude, weather, and other factors can all impact burner performance. Older grills can also show more yellow flame as food deposits, oils, and fats build up.

ALWAYS

1. Keep the grilling area clear and free from combustible materials, gasoline, and other flammable vapors and liquids.
2. Do not obstruct the flow of combustion and ventilation air.

Keep the ventilation openings of the cylinder enclosure free and clear from debris.

GRILL STORAGE

1. Clean your grill before storage.
2. Storage of a gas grill indoors is permissible only if the cylinder is disconnected and removed from the gas grill.
3. Cover the grill.
4. Perform a Leak Test before use after storage.

Grilling With Your New Grill

Welcome to the world of grilling. Whether you're already an established griller, or just starting out, your new grill should bring you much enjoyment and satisfaction, to say nothing of some phenomenal meals. We encourage you to experiment to find your own favorite recipes.

The control panel is labeled "HI / LIGHT", "LOW", and "OFF" for each burner control knob. Simply push in on the temperature control knobs and turn to the desired heat setting. A thermometer is placed in the hood so that you can see the cooking temperature inside the grill.

The heat diffusers are designed to help evenly distribute heat throughout the grill. They are also designed to catch and smoke the right amount of drippings, adding more flavors to your meal.

DIRECT VS. INDIRECT COOKING

Food cooked on the grill is either done using direct or indirect cooking. Direct cooking is when the food is cooked directly over the heat. Food is placed in-between the burners for indirect cooking.

DIRECT—used for preheating and searing

Use direct cooking to sear meats. This helps to keep food moist by locking in juices. Some food, such as steak, is first seared using Direct cooking, and then finished cooking using the Indirect method. This is generally used for quicker cooking foods. Preheat the grill to 500°F (260°C). You can shut off one or more burners if you do not need to use the entire grilling surface once you reach over 500°F (260°C).

You can also use a medium high heat of 400°F or more by turning the burners down slightly. Place the food directly over the heat source. Remain vigilant when grilling using this method, as it's easy to overcook.

INDIRECT—how most food is cooked on a gas grill

Indirect cooking is used for foods that take longer to cook, including large cuts of meat such as roasts. It's also used for cooking more delicate food that can dry out quickly such as fish and poultry, for fattier foods to reduce flare-ups, and when grilling using a roasting pan or aluminum foil. Preheat the grill to 500°F (260°C). Then turn some burners off, and others to medium to low depending on the temperature you want to maintain.

Generally, turn the center burner off for a 3-burner model and the 2 inside burners off on a 4-burner model. Grills with more than 4 burners will vary depending on what you are cooking. Generally, you want to keep the temperature around 350°F. Do not place the food directly over any burners when using this grilling method.

GRILLING TIPS AND TRICKS

1. Always "Preheat" your grill before cooking. Light all main burners, turn to "HI", and close the lid until the thermometer reads over 500°F (260°C), which should take 4 minutes. Then adjust the burner control knobs to the proper temperature. Note that no preheating is necessary for the side burner.

2. The thermometer measures the temperature at the top of the lid. The temperature down by the cooking grates is generally somewhat warmer.

3. Mother Nature can impact your grilling times. Allow more cooking time for cold, wind, and higher altitudes. We recommend you place the grill in an area protected from too much wind.

4. Trim away any excess fat from meat to reduce flare-ups.

5. Keep similar size portions together so that they cook more evenly.

6. Generally, the more food on the grill, the longer the cooking time.

7. Be aware when using the Direct cooking method, as food can easily become overcooked, burned, or dry out. Food may require more turning, or sometimes, may need to be moved off the flame.

8. Larger pieces of meat generally require more cooking time per pound than smaller pieces of meat.

9. If a major flare-up, or too many flare-ups occur, turn off the gas, move the food away from the flare-up, and close the hood. Restart the grill once the flare-up has died down.

10. Turn foods infrequently. Generally, only turn a steak once during cooking.

11. Use tongs rather than a fork when turning the food on the grill. Less juice will be lost that way.

FOOD SAFETY

1. Always use safe food handling and preparation when using this grill.
2. Wash all poultry, seafood, and vegetables before cooking.
3. Use separate platters, plates, and utensils for uncooked and cooked foods.
4. Leave all meat, poultry, and seafood in the refrigerator until ready to cook.
5. Use a meat thermometer to ensure foods are adequately cooked.

TROUBLESHOOTING

BURNER WILL NOT LIGHT

1. Gas supply is turned off. Turn on gas at LP tank.
2. Out of propane. Check to be sure you still have propane in your tank.
3. Regulator is not properly seated into the tank valve. Remove and reattach. Hand tighten only.
4. Crimped fuel supply hose. Inspect and straighten.
5. Regulator failure or damaged hose. Order replacement part and replace.
6. Make sure you can hear the electronic igniter clicking. If not, replace the battery with an “AA” size. Inspect the electrode to be sure it’s not coated in grease or dirt. If so, clean with rubbing alcohol. Check the distance from the electrode tip to the burner. The tip of the electrode should be 1/8” to 1/4” from the main burner and 1/8” to 3/16” from the side burner. Adjust if necessary. Inspect the electrodes to be sure they are not cracked or broken. If so, order replacement parts and replace.
7. Blockage in the gas system. Inspect the burners to be sure insects, spider webs, etc. do not block them.

IRREGULAR FLAME OR YELLOW FLAME

1. New burner may have residual oil, which will burn off.
2. Tubes in burners are blocked. Remove and clean.
3. Burners have a high grease or dirt build-up. Remove and clean.
4. Burners are not aligned properly with the valves. Inspect under the control panel.

SUDDEN DROP IN GAS PRESSURE OR FLAMES BLOW OUT

1. Out of gas. Check to be sure you still have propane in your tank.
2. Your excessive fuel flow valve has tripped, thereby reducing the flow of gas. Turn off all burners, wait 30 seconds, and relight grill. If problem persists, turn off all burners. Disconnect regulator from tank.

Wait 10 minutes. Reconnect regulator and leak test. Slowly turn on LP tank and relight grill. Other ways the flow limiting device can be activated include:
a. A ruptured gas hose. Inspect, perform a leak test, and replace as necessary.
b. Opening the control knobs before turning on the LP gas at the tank. Turn on the gas at the LP tank first before turning on a control knob to light.
c. Improper purging of tank before it was filled. See your LP gas dealer.
3. Wind could be blowing out your burner. Turn front of grill to face wind or move out of the wind.

EXCESSIVE FLARE-UPS

1. Flame tamer, inside of grill, grates, and burners need to be cleaned.
2. Grease tray needs to be cleaned and emptied.
3. Using too high of heat to cook. Reduce control knob setting.
4. Direct cooking method will produce more flare-ups than indirect. If using direct method, try using indirect.

FIRE BEHIND CONTROL PANEL

Immediately shut off LP tank valve and allow grill to cool.

1. Check burners for obstructions and clean.

2. inspect under the control panel to be sure the burners are aligned properly with valve.
3. Gas is leaking from a faulty connection or damaged hose. Perform a leak test and inspect for leaks. Tighten or replace parts as necessary.

WARRANTY

LIMITED WARRANTY

Koolmore Supply, Inc. extends a limited warranty to the original purchaser, guaranteeing that this Koolmore product is free from manufacturing defects in material or workmanship for one year from the date of purchase.

Should you discover any such defect within the warranty period, Koolmore Supply, Inc., reserves the right to repair or replace the product without charge, or to cover the cost of replacement parts and repair labor needed to correct defects present at the time of purchase or resulting from regular usage, when the appliance has been installed, operated, and maintained as per the instructions provided.

At its sole discretion, Koolmore Supply Inc. may decide to replace the product. In such an event, your replacement
appliance will carry the warranty for the remaining term of the original unit's warranty period.

This warranty is valid exclusively to the original purchaser of the product and only applicable within the United States. The warranty commences from the date of original consumer purchase. Proof of the original purchase date will be required to obtain service under this warranty.

Under this limited warranty, your sole and exclusive remedy will be product repair, as outlined above. All services must be provided by a Koolmore-designated service company.

To claim warranty or request repair service:

Email support@koolmore.com. Please include your name, address, phone number, warranty repair request, and a copy of your proof of purchase receipt. Alternatively, visit koolmore.com and use the contact us page. A Koolmore customer service representative will promptly arrange service for your appliance.

We thank you for choosing Koolmore.

WARRANTY EXCLUSIONS

This limited warranty will not cover:

1. Failure of the product to perform during power failures or interruptions,
or due to inadequate electrical service.
2. Damage incurred during transportation or handling.
3. Damage caused by accidents, vermin, lightning, winds, fire, floods, or acts of God.
4. Damage resulting from accidents, alterations, misuse, abuse, improper installation, repair, or maintenance. This includes using any external device that alters or converts the voltage or frequency of
electricity.
5. Unauthorized product modifications, repairs by unauthorized centers, or use of non-approved
replacement parts.
6. Abnormal cleaning and maintenance not aligned with the user's manual.
7. Use of incompatible accessories or components.
8. Any costs associated with repairs or replacements under these excluded circumstances shall be the responsibility of the consumer.


KoolMore