get started

INSTANT POT® **RIO MINI**
4QT MULTI-COOKER

USER MANUAL

Instant Pot®

140-8006-01_140-8003-01_140-8004-01_140-8005-01_RIO-MINI_National_US_4QT_Manual_399-1291-03US_F7/8/25 9:42 AM 2025.ind

Welcome

to your new Instant Pot RIO Mini!

This Instant Pot® RIO Mini Multi-Cooker can help you cook healthy, delicious meals easily — so you'll have more time for all the other things in your life. We hope you fall in love with Instant Pot cooking and enjoy it in your kitchen for years to come!

Get started with your new Instant Pot!

⚠WARNING

Before using your new appliance, read all instructions, including the Important Safeguards. **Failure to follow the safeguards and instructions may result in personal injury and/or property damage.**

140-8006-01_140-8003-01_140-8004-01_140-8005-01_RIO-MINI_National_US_4QT_Manual_399-1291-03US_F7/8/25 9:42 AM 7/8/25 9:42 AM 2025.ind

CONTENTS

Important safeguards	2
Using your Instant Pot RIO Mini	10
Initial set up	12
Changing settings	14
Using the lid	15
About pressure cooking	18
Pressure Cook	19
Rice	21
Steam	23
Slow Cook	25
Sauté	27
Yogurt	29
Keep Warm	31
Delay Start	33
Maintenance	34
Cleaning	38
Troubleshooting	39
Error Codes	41
Replacement Parts	42
Learn more	43
Warranty	44

140-8006-01_140-8003-01_140-8004-01_140-8005-01_RIO-MINI_National_US_4QT_Manual_399-1291-03US_F7/8/25 9:42 AM 7/8/25 9:42 AM 2025.ind

⚠ IMPORTANT SAFEGUARDS

⚠WARNING

Failure to follow safety instructions may result in personal injury and/or property damage and may void your warranty.

READ ALL INSTRUCTIONS

Before using your new appliance, please read all instructions, including the Safety Information below. Keep this manual for reference.

Placement

- **DO** place the appliance on a countertop only. Always operate the appliance on a stable, non-combustible, level surface.
- **DO** make sure all parts are dry and free of food debris before placing the inner cooking pot on the cooker base.
- **DO NOT** place the appliance or power cord on or close to a gas or electric stovetop or oven. **NEVER** use the appliance on your stove.
- **DO NOT** use the appliance near water, an external heat source or flame.
- **DO NOT** use outdoors. Keep out of direct sunlight.
- **DO NOT** place on anything that may block the vents on the bottom of the appliance.

General Use

The removable inner cooking pot is extremely hot during use and can be extremely heavy when full of ingredients.

- **DO** use oven mitts when handling the inner cooking pot and removing accessories.
- **DO** place hot accessories on a heat-resistant surface or cooking plate.
- **DO** use care when lifting the cooking pot from the cooker base to avoid burn injury.
- **DO** use extreme caution when the cooking pot contains hot food, hot oil or other hot liquids.
- **DO** use only the Instant Pot lid that came with this cooker base. Using any other pressure cooker lids may cause personal injury and/or property damage.

140-8006-01_140-8003-01_140-8004-01_140-8005-01_RIO-MINI_National_US_4QT_Manual_399-1291-03US_F7/8/25 9:42 AM 7/8/25 9:42 AM 2025.ind

⚠WARNING

Failure to follow safety instructions may result in personal injury and/or property damage and may void your warranty.

- **DO NOT** use the appliance without the removable inner cooking pot installed.
- **DO NOT** touch the appliance's hot surfaces, or any accessories during or immediately after cooking because they will be hot. Only use the appliance's side handles for carrying or moving.
- **DO NOT** use this appliance for deep frying or pressure frying with oil.
- **DO NOT** move the appliance while it is in use and use extreme caution when disposing of hot grease.
- **DO NOT** allow children or persons with reduced physical, sensory or mental capabilities to operate this appliance. Close supervision is necessary when any appliance is used by or near children and persons with reduced physical, sensory or mental capabilities. Children should not play with this appliance.
- **DO NOT** use the appliance for anything other than household use. It is not intended for commercial use.
- **DO NOT** leave the appliance unattended while in use.

Pressure Cooking

This appliance cooks under pressure. Allow the appliance to depressurize naturally or release all excess pressure before opening. **Failure to follow these instructions may result in burns, personal injury and/or property damage.**

- **DO** make sure the appliance is properly closed before operating.
- **DO** check that the steam release valve is installed properly.
- **DO** use the pressure cooking lid when pressure cooking.
- **DO** turn the appliance off if steam escapes from the steam release valve and/or float valve in a steady stream for longer than 3 minutes. If steam escapes from the sides of the lid, turn the appliance off. Once steam stops, pressure is released and the cooker has cooled, carefully make sure the sealing ring is properly installed.
- **DO** ensure the sealing ring is in good condition and installed properly.
- **DO** check the steam release valve, steam release pipe, anti-block shield and float valve for clogging before use.
- **DO NOT** remove the pressure cooking lid with unprotected hands.

140-8006-01_140-8003-01_140-8004-01_140-8005-01_RIO-MINI_National_US_4QT_Manual_399-1291-03US_F7/8/25 V9.4 AM-2025.ind

⚠WARNING

Failure to follow safety instructions may result in personal injury and/or property damage and may void your warranty.

- **DO NOT** attempt to force the lid off the Instant Pot cooker base.
- **DO NOT** move the appliance when it is pressurized.
- **DO NOT** cover or obstruct the steam release valve and/or float valve with cloth or other objects.
- **DO NOT** attempt to open the appliance until it has depressurized, and all internal pressure has been released. Attempting to open the appliance while it is still pressurized may lead to sudden release of hot contents and may cause burns, personal injury and/or property damage.
- **DO NOT** place your face, hands or exposed skin over the steam release valve or float valve when the appliance is in operation or has residual pressure, and do not lean over the appliance when removing the lid.

Overfill During Pressure Cooking

Overfilling may cause a risk of clogging the steam release pipe and valve, developing excess pressure.

- **DO NOT** fill the inner cooking pot over the line labeled 'PC MAX' or 'Max PC Fill'.
- **DO NOT** fill the inner cooking pot over the line labeled '1/2' when cooking foods that expand during cooking such as rice, dried beans or dried vegetables.
- **DO** be aware that certain foods, such as applesauce, cranberries, pearl barley, oatmeal or other cereals, split peas, noodles, macaroni, rhubarb, or spaghetti can foam, froth and sputter, and clog the steam release pipe and valve. **DO NOT** fill the inner cooking pot over the line labeled '1/2' when cooking these foods.
- **DO NOT** place oversized foods into the inner cooking pot as they may cause risk of fire, personal injury and/or property damage.

Accessories

- **DO** use only accessories or attachments authorized by Instant Pot Brands. The use of parts, accessories or attachments not recommended by the manufacturer may cause a risk of electric shock or other personal injury, fire and/or property damage.

140-8006-01_140-8003-01_140-8004-01_140-8005-01_RIO-MINI_National_US_4QT_Manual_399-1291-03US_F7/8/25 9:42 AM 7/8/25 9:42 AM 2025.ind

⚠WARNING

Failure to follow safety instructions may result in personal injury and/or property damage and may void your warranty.

- **DO** use only an authorized Instant Pot inner cooking pot to reduce the risk of pressure leakage.
- **DO** only replace the sealing ring with an authorized Instant Pot sealing ring to prevent personal injury, property damage, and/or damage to the appliance.
- **DO NOT** use the included accessories in a microwave, toaster oven, convection or conventional oven, on a ceramic, electric or gas cooktop, or with an outdoor grill.

Care and Storage

- **DO** let the appliance cool to room temperature before cleaning or storage.
- **DO NOT** store any materials, other than the inner cooking pot, in the cooker base when not in use.
- **DO NOT** place any combustible materials in the cooker base, such as paper, cardboard, plastic, Styrofoam or wood.

Power Cord

A short power-supply cord is used to reduce the hazards resulting from grabbing, entanglement or tripping. **WARNING:** Hot spilled food can cause serious burns.

- **DO** keep appliance and power cord away from children.
- **DO** disconnect the power cord from the electrical outlet when not
- using the appliance and before cleaning.
- **DO NOT** let the power cord hang over edges of tables or counters.
- **DO NOT** let the power cord touch hot surfaces or open flame, including a stovetop.
- **DO NOT** use below-counter power outlets.
- **DO NOT** use with extension cords, power converters or adapters, timer switches or separate remote-control systems.

This appliance has a polarized plug and one blade is wider than the other. To reduce the risk of electric shock:

- **DO** plug this appliance into a polarized outlet one way.
- **DO** contact a qualified electrician if the plug does not fit in the outlet.
- **DO NOT** attempt to modify the plug. If the plug does not fit full into the outlet, reverse the plug.

140-8006-01_140-8003-01_140-8004-01_140-8005-01_RIO-MINI_National_US_4QT_Manual_399-1291-03US_F7/8/25 9:42 AM 7/8/25 9:42 AM 2025.ind

⚠WARNING

Electrical Warning

The cooker base contains electrical components that are an electrical shock hazard. **Failure to follow these instructions may result in electric shock and/or death.**

To protect against electrical shock:

- To disconnect, select **Cancel**, then remove plug from power source. Always unplug when not in use, as well as before adding or removing parts or accessories, and before cleaning. To unplug, grasp the plug and pull from the outlet. **NEVER** pull from the power cord.
- **DO** regularly inspect the appliance and power cord for any signs of damage or fraying.
- **DO NOT** operate the appliance if the power cord or plug is damaged, or after the appliance malfunctions or is dropped or damaged in any manner. For assistance, contact Consumer Care by email at **support@instantpot.com**.
- **DO NOT** attempt to repair, replace or modify components of the appliance, as this may cause electric shock or other personal injury, fire and/or property damage, and will void the warranty. For assistance, contact Consumer Care by email at **support@instantpot.com**.
- **DO NOT** tamper with any of the safety mechanisms, as this may result in personal injury and/or property damage.
- **DO NOT** put liquid or food of any kind into cooker base without the inner cooking pot.
- **DO NOT** immerse the power cord, plug or the appliance in water or other liquid.
- **DO NOT** clean the appliance by rinsing it under a faucet.
- **DO NOT** use the appliance in electrical systems other than 120 V ~ 60 Hz for North America.

SAVE THESE INSTRUCTIONS

⚠WARNING

Failure to follow safety instructions may result in personal injury and/or property damage and may void your warranty.

140-8006-01_140-8003-01_140-8004-01_140-8005-01_RIO-MINI_National_US_4QT_Manual_399-1291-03US_F7/8/25 V9.42AM-2025.ind

WHAT'S IN THE BOX

Lid (top)

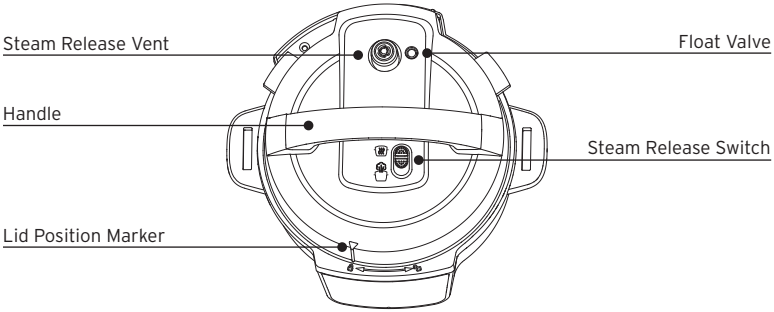

Lid (bottom)

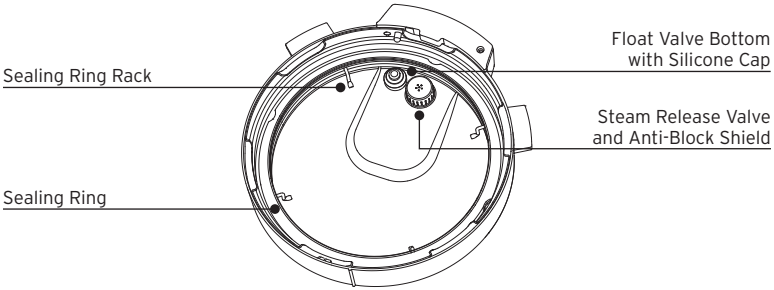

140-8006-01_140-8003-01_140-8004-01_140-8005-01_RIO-MINI_National_US_4QT_Manual_399-1291-03US_F7/8/25 9:42 AM 7/8/25 9:42 AM 2025.ind

Cooking Pot

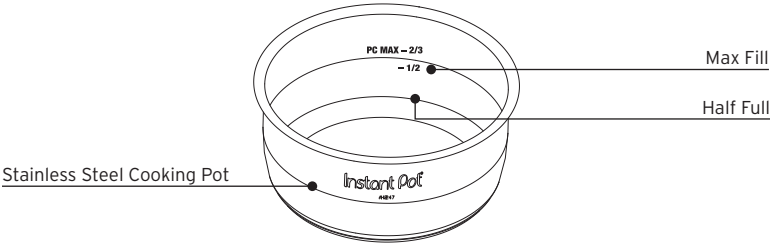

Cooker Base

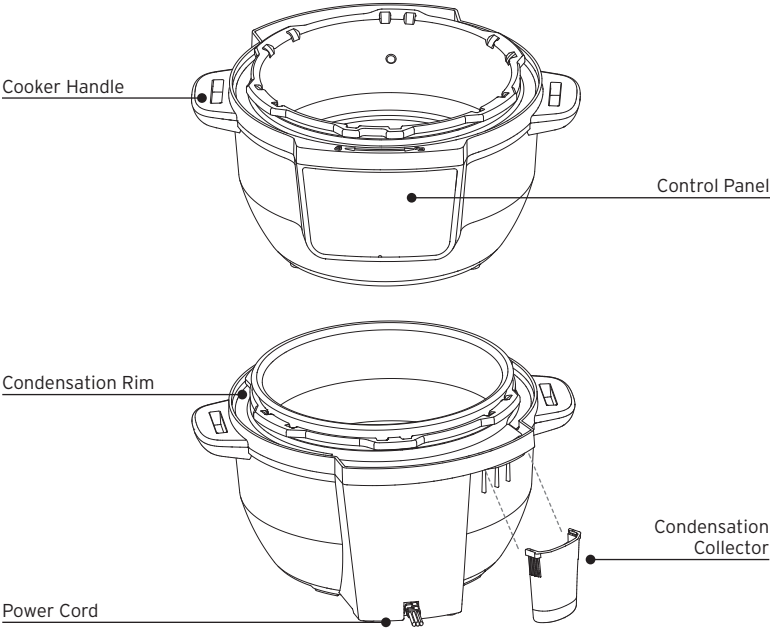

140-8006-01_140-8003-01_140-8004-01_140-8005-01_RIO-MINI_National_US_4QT_Manual_399-1291-03US_F7/8/25 9:42 AM 7/8/25 9:42 AM 2025.ind

Accessories

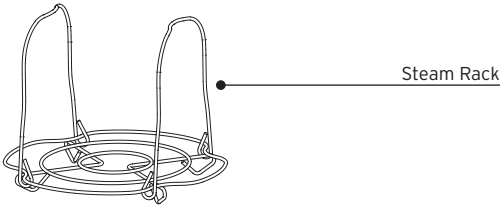

Illustrations are for reference only and may differ from the actual product.

Remember to recycle!

We designed this packaging with sustainability in mind. Please recycle everything that can be recycled where you live.

140-8006-01_140-8003-01_140-8004-01_140-8005-01_RIO-MINI_National_US_4QT_Manual_399-1291-03US_F7/8/25 9:42 AM 7/8/25 9:42 AM 2025.ind

USING YOUR INSTANT POT RIO MINI

Control panel

We've designed the control panel to be simple to use and easy to read.

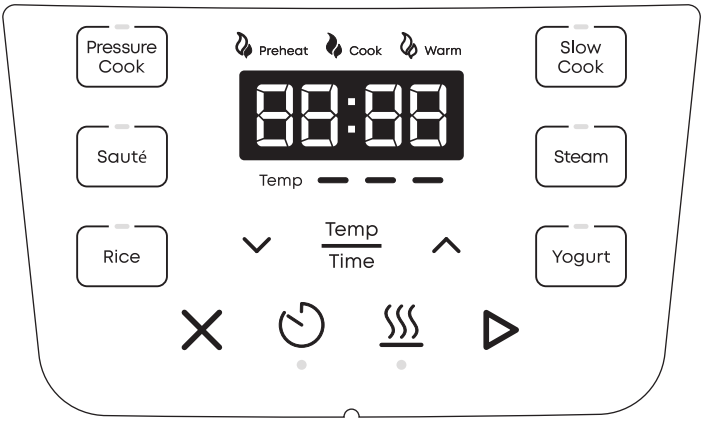

Control Panel buttons and indicators

Smart Programs

Pressure Cook		Sauté		Rice	
Pressure Cook	Pressure Cook	Sauté	Sauté	Rice	Rice
Off	On	Off	On	Off	On

Slow Cook		Steam		Yogurt	
Slow Cook	Slow Cook	Steam	Steam	Yogurt	Yogurt
Off	On	Off	On	Off	On

140-8006-01_140-8003-01_140-8004-01_140-8005-01_RIO-MINI_National_US_4QT_Manual_399-1291-03US_F7/8/25 9:42 AM 7/8/25 9:42 AM 2025.ind

Controls

Time/Temp	
Temp / Time	
Decrease	Increase

Delay Start		Keep Warm		Cancel	Start
Off	On	Off	On	Press to cancel	Press to start

Indicators

Temp Level (Sauté, Yogurt)		
Temp	Temp	Temp
Low	Med	High

Temp Level (Slow Cook)	
Lo Temp	Hi Temp
Low	High

Status Display	Progress Indicators		
00:01			
Cooking, Delay and Warm Times, Messages	Preheat	Cook	Warm

140-8006-01_140-8003-01_140-8004-01_140-8005-01_RIO-MINI_National_US_4QT_Manual_399-1291-03US_F7/8/25 9:42 AM 7/8/25 9:42 AM 2025.ind

INITIAL SET UP

Clean and assembly before use

1. Wash the cooking pot with hot water and soap. Rinse and use a soft cloth to dry the outside. Or you can wash the cooking pot in the dishwasher.
2. Wipe the heating element inside the multi-cooker base with a soft cloth to ensure there are no stray packaging particles.
3. Install the condensation collector. See the instructions on page 37.

Connect to power

When you're ready to use your Instant Pot, plug the power cord into an electrical outlet. When you're done cooking and whenever you're cleaning the multi-cooker, unplug the cord from the outlet.

Test run

Performing a test run is a great way to familiarize yourself with how the multi-cooker works before you actually cook a meal.

To perform a test run:

1. Add 3 cups water to the cooking pot.
2. Place the cooking pot into the multi-cooker base.
3. Place the lid on top of the multi-cooker base and turn to lock.

   See 'How to close the lid' below.
4. Press **Pressure Cook**.
5. Press the ∧ **Up** or ∨ **Down** arrows to select 5 minutes time.
6. Press **Keep Warm** to turn off Keep Warm.
7. Press ▷ **Start**. The Progress Indicator shows **Preheat**.
8. When the pressure is ready, the Progress Indicator shows **Cook**.

140-8006-01_140-8003-01_140-8004-01_140-8005-01_RIO-MINI_National_US_4QT_Manual_399-1291-03US_F7/8/25 9:42 AM 7/8/25 9:42 AM 2025.ind

9. When the timer reaches 00:00, cooking stops and the Status Display shows **End**.
10. Set the steam release switch on the lid to **Vent** . When all steam is released, the Float Valve drops into the lid.

    See 'How the Float Valve works' on page 17.

11. Open the lid.

    See 'How to open the lid' below.

    Use care: the cooking pot will be hot. Let the pot cool before carefully lifting it out.

12. Discard any remaining water, and then wash and dry the cooking pot.

Now you're ready to cook a meal in your Instant Pot!

140-8006-01_140-8003-01_140-8004-01_140-8005-01_RIO-MINI_National_US_4QT_Manual_399-1291-03US_F7/8/25 9:42 AM 7/8/25 9:42 AM 2025.ind

CHANGING SETTINGS

Turn the sound On/Off

You can set the alert sounds to either ON or OFF.

1. When the Status Display shows **OFF**, press and hold **Delay Start** and **Keep Warm** for 5 seconds.
2. The Status Display shows **S On** or **SOFF**. The new sound setting is active.

Audible safety alerts cannot be turned off.

Cancel cooking

When in Preheating, Cooking or Keep Warm modes, press **Cancel**. The Status Display shows **OFF**.

Memorized settings

Each time you use a smart program, the multi-cooker memorizes the settings you select and they become the default the next time you use that program. Each time you use a smart program, you can use the default settings or change them. This applies to:

- Temperature settings
- Cooking time settings

You can erase the memorized settings and reset them to the original factory settings.

Reset individual smart programs

- When the Status Display shows **OFF**, press and hold one smart program button for over 3 seconds until the smart program flashes twice and the multi-cooker returns to Ready mode.

  The individual smart program settings are restored to the factory defaults.

Reset all smart programs

- When the Status Display shows **OFF**, press and hold **Cancel** for over 3 seconds until all smart program buttons flash 3 times.

  All smart program settings are restored to the factory defaults.

140-8006-01_140-8003-01_140-8004-01_140-8005-01_RIO-MINI_National_US_4QT_Manual_399-1291-03US_F7/8/25N9:27AM1-2025.ind

USING THE LID

You'll use the lid for most smart programs, and always for pressure cooking. Always use the lid that came with this Instant Pot RIO Mini multi-cooker base.

How to close the lid

1. Line up the ▽ on the lid with the 🔓 on the multi-cooker base.

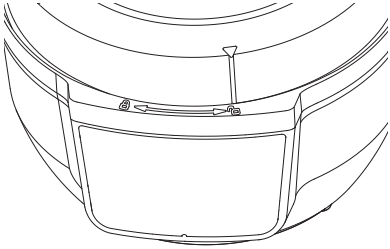

2. Turn the lid until the ▽ on the lid aligns with the 🔒 on the multi-cooker base.

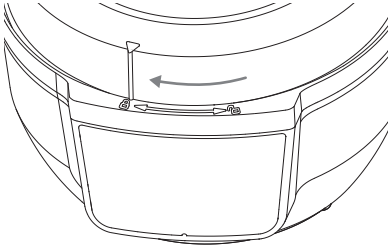

For pressure cooking, the lid will automatically lock when the multi-cooker starts building pressure.

140-8006-01_140-8003-01_140-8004-01_140-8005-01_RIO-MINI_National_US_4QT_Manual_399-1291-03US_F7/8/25 9:42 AM 7/8/25 9:42 AM 2025.ind

How to open the lid

1. If you're using a pressure cooking smart program, make sure to vent the steam first until the Float Valve drops into the lid.

   See 'How the Float Valve works' below.

2. Turn the lid counterclockwise until the ▽ on the lid lines up with the 🔓 on the multi-cooker base.

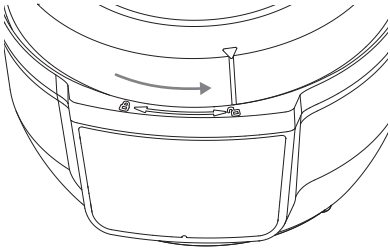

3. Carefully lift the lid up and off the multi-cooker base.

How to release steam

Instant Pot RIO Mini can release steam in 2 different ways. Use the one that best fits the type of food you're cooking or the recipe calls for.

Natural steam release

Releases steam gradually over time (up to 40 minutes or more) after cooking stops.

Use for: Foods that can simmer, like stews, chili, pasta and beans.

1. When a pressure cooking program ends, Natural steam release begins automatically.
2. When all steam is released, the Float Valve drops into the lid.

   See 'How the Float Valve works' below.

140-8006-01_140-8003-01_140-8004-01_140-8005-01_RIO-MINI_National_US_4QT_Manual_399-1291-03US_F7/8/25 9:42 AM 7/8/25 9:42 AM 2025.ind

Quick steam release

Quickly releases steam after cooking stops.

Use for: Foods that tend to overcook, like vegetables and seafood.

1. When a pressure cooking program ends, set the steam release switch on the lid to **Vent** .
2. When all steam is released, the Float Valve drops into the lid.

   See 'How the Float Valve works' below.

How the Float Valve works

The float valve shows whether there is pressure in the multi-cooker (pressurized) or not (depressurized). It appears in two positions:

Pressurized	Depressurized
The float valve has popped up.	The float valve has dropped down into the lid.
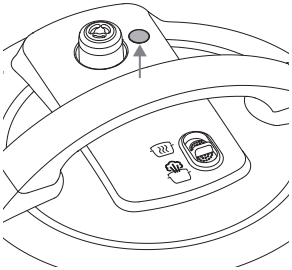	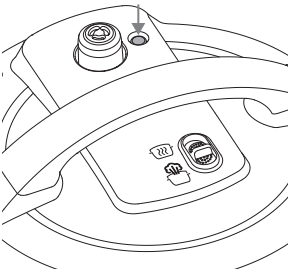

The float valve comes installed in the multi-cooker. Do not touch the float valve during use.

Caution: It may not be easy to see if the float valve has dropped into the lid. Look closely at the float valve and never try to force the lid open.

⚠ Pressure Cooking Caution

This appliance uses pressure to cook. Allow the appliance to release all excess pressure and steam before opening the lid. Opening the lid before pressure is released may result in burns, personal injury and/or property damage. Read more in the Safety section.

140-8006-01_140-8003-01_140-8004-01_140-8005-01_RIO-MINI_National_US_4QT_Manual_399-1291-03US_7/8/25 9:42 AM 7/8/25 9:42 AM 2025.ind

ABOUT PRESSURE COOKING

Pressure cooking uses pressure to raise the temperature in the cooking pot, allowing you to cook food much faster than normal. When pressure cooking, the Instant Pot RIO Mini goes through 3 stages.

Pre-heating

While the multi-cooker pre-heats, it heats the liquid to create steam. Once enough pressure has built up, the lid locks in place and the multi-cooker is ready to start cooking.

Cooking

When the multi-cooker reaches the required pressure level, cooking begins and keeps the pressure level consistent throughout cooking.

See the smart program instructions starting on page 19 for details.

Steam release

When food has finished cooking, the multi-cooker is still pressurized and hot. Venting releases the pressure, lowers the temperature and allows you to safely remove the lid.

See How to release steam on page 16.

Using liquid to create steam

Pressure cooking requires liquid in the cooking pot to produce the steam needed. Here are the minimum amounts you'll need:

Instant Pot Size	Minimum Liquid for Pressure Cooking*
4 Quarts / 3.8 Litres	3 cups (25 oz / 750 mL)

**Unless otherwise specified in recipe.*

Pressure cooking liquids should be water-based, such as broth, stock, soup or juice. If using canned, condensed, or cream-based soup, add water as directed above.

140-8006-01_140-8003-01_140-8004-01_140-8005-01_RIO-MINI_National_US_4QT_Manual_399-1291-03US_F7/8/25 9:42 AM 7/8/25 9:42 AM 2025.ind

PRESSURE COOK

Pressure cooking uses pressurized steam to quickly and evenly cook foods. You can adjust the settings as your recipe directs.

Choose from these settings in the Pressure Cook smart program. The program uses the default settings or the settings you selected the last time you used the Pressure Cook program.

Default Cook Time	Min Cook Time	Max Cook Time
10 minutes	0 minutes	4 hours

Other settings

- Keep Warm is set to ON by default.
- Delay Start is available.

How to pressure cook

Prep

Cut, chop, season or marinate your ingredients according to your recipe.

Preheat

1. Place the cooking pot into the multi-cooker base and add ingredients and liquid.
2. Place the lid on top of the multi-cooker base and lock the lid.
3. Press **Pressure Cook**. The default or last-used cooking settings display.
4. To change the cooking time, press the ∧ **Up** or ∨ **Down** arrows to select a time.
5. To turn off Keep Warm, press **Keep Warm**.

   You can activate Keep Warm at any time during cooking.
6. To start cooking later, press **Delay Start**, then press the ∧ **Up** or ∨ **Down** arrows to select a delay time.

140-8006-01_140-8003-01_140-8004-01_140-8005-01_RIO-MINI_National_US_4QT_Manual_399-1291-03US_F7/8/25N9:27AM1-2025.indd

7. Press ▷ **Start**. The Progress Indicator shows **Preheat**.

   It can take 15 minutes or more to reach the pressure setting for cooking. Frozen foods and large quantities increase the preheating time.

Cook

1. When the pressure is ready, the Progress Indicator shows **Cook** and the cooking timer starts counting down.

   *You can press ✕ **Cancel** to stop cooking and cancel the smart program at any time.*

   *You can press **Keep Warm** at any time during cooking to turn it off.*

Stop cooking

1. When the timer reaches 00:00, cooking stops and Natural steam release begins. The Status Display shows **End**. If you prefer, you can use Quick steam release by pushing the steam release switch on the lid to **Vent**.
2. If Keep Warm is ON, the timer starts counting up.

   *You can press ✕ **Cancel** at any time to stop Keep Warm.*
3. When all steam is released, the Float Valve drops into the holder.

   See 'How the Float Valve works' on page 17.

140-8006-01_140-8003-01_140-8004-01_140-8005-01_RIO-MINI_National_US_4QT_Manual_399-1291-03US_F7/8/25 9:42 AM 7/8/25 9:42 AM 2025.ind

RICE

The Rice smart program uses pressurized steam to cook rice quickly and evenly. You can adjust the settings as your recipe directs.

Choose from these settings in the Rice smart program. The program uses the default settings or the settings you selected the last time you used the Rice program.

Default Cook Time	Min Cook Time	Max Cook Time
12 minutes	0 minute	1 hour

Other settings

- Keep Warm is set to ON by default.
- Delay Start is available.

How to cook rice

Prep

Prepare the ingredients according to your recipe.

Preheat

1. Place the cooking pot into the multi-cooker base and add ingredients and liquid.
2. Place the lid on top of the multi-cooker base and lock the lid.
3. Press **Rice**. The default or last-used cooking settings display.
4. To change the cooking time, press the ∧ **Up** or ∨ **Down** arrows to select a time.
5. To turn off Keep Warm, press **Keep Warm**.

   You can activate Keep Warm at any time during cooking.
6. To start cooking at a later time, press **Delay Start**, then press the ∧ **Up** or ∨ **Down** arrows to select a delay time.

140-8006-01_140-8003-01_140-8004-01_140-8005-01_RIO-MINI_National_US_4QT_Manual_399-1291-03US_F7/8/25 9:42 AM 7/8/25 9:42 AM 2025.ind

7. Press ▷ **Start**. The Progress Indicator shows **Preheat**.

   It can take 15 minutes or more to reach the pressure setting for cooking. Frozen foods and large quantities increase the preheating time.

Cook

1. When the pressure is ready, the Progress Indicator shows **Cook** and the cooking timer starts counting down.

   *You can press ✕ **Cancel** to stop cooking and cancel the smart program at any time.*

   *You can press **Keep Warm** at any time during cooking to turn it off.*

Stop cooking

1. When the timer reaches 00:00, cooking stops and Natural steam release begins. The Status Display shows **End**. If you prefer, you can use Quick steam release by pushing the steam release switch on the lid to **Vent**.
2. If Keep Warm is ON, the timer starts counting up.

   *You can press ✕ **Cancel** at any time to stop Keep Warm.*
3. When all steam is released, the Float Valve drops into the holder.

   See 'How the Float Valve works' on page 17.

140-8006-01_140-8003-01_140-8004-01_140-8005-01_RIO-MINI_National_US_4QT_Manual_399-1291-03US_F7/8/25 9:42 AM 7/8/25 9:42 AM 2025.ind

STEAM

Use Steam as you would a regular stovetop steamer, boiling liquid to cook food with hot steam.

Choose from these settings in the Steam smart program. The program uses the default settings or the settings you selected the last time you used the Steam program.

Default Cook Time	Min Cook Time	Max Cook Time
10 minutes	0 minute	1 hour

Other settings

- Keep Warm is set to ON by default.
- Delay Start is available.

How to steam

Prep

Cut or chop your ingredients according to your recipe.

Preheat

1. Place the cooking pot into the multi-cooker base and add ingredients and liquid.
2. Place the lid on top of the multi-cooker base and lock the lid.
3. Press **Steam**. The default or last-used cooking settings display.
4. To change the cooking time, press the ∧ **Up** or ∨ **Down** arrows to select a time.
5. To start cooking later, press **Delay Start**, then press the ∧ **Up** or ∨ **Down** arrows to select a delay time.
6. Press ▷ **Start**. The Progress Indicator shows **Preheat**.

   It can take 15 minutes or more to reach the temperature for cooking.

140-8006-01_140-8003-01_140-8004-01_140-8005-01_RIO-MINI_National_US_4QT_Manual_399-1291-03US_F7/8/25 9:42 AM 7/8/25 9:42 AM 2025.ind

Cook

1. When the pressure is ready, the Progress Indicator shows **Cook** and the cooking timer starts counting down.

   You can press ✕ ***Cancel*** *to stop cooking at any time.*

Stop cooking

1. When the timer reaches 00:00, cooking stops. The Status Display shows **End**.
2. The Steam smart program does not use pressure to cook, but a small amount of pressure can build up and make it hard to remove the lid. If that happens, set the steam release switch on the lid to **Vent** until any extra steam is released.

140-8006-01_140-8003-01_140-8004-01_140-8005-01_RIO-MINI_National_US_4QT_Manual_399-1291-03US_F7/8/25 9:42 AM 7/8/25 9:42 AM 2025.ind

SLOW COOK

Slow Cook lets you make your favorite simmering and stewing recipes, just as you would in a slow cooker. Slow Cook does not use pressure to cook food.

Choose from these settings in the Slow Cook smart program. The program uses the default settings or the settings you selected the last time you used the Slow Cook program.

Default Cook Setting	Cook Setting Options	Default Cook Time	Min Cook Time	Max Cook Time
High	High Low	6 hours	30 minutes	24 hours

Cook settings

For Slow Cooking, you can choose either the Low or High setting.

High Setting	Low Setting
• 2.5 hours to reach maximum temperature of 205°F / 95°C (faster) • 3 hours minimum cooking time recommended • Faster initial heating is ideal for foods like leaner meats (chicken or pork), soft vegetables and soups	• 4.5 hours to reach maximum temperature of 205°F / 95°C (slower) • 4 hours minimum cooking time recommended • Slower initial heating is ideal for foods like tougher meats (pot roast or brisket), dense roasts, bone in meat and root vegetables

Other settings

- Keep Warm is ON by default.
- Delay Start is available.

140-8006-01_140-8003-01_140-8004-01_140-8005-01_RIO-MINI_National_US_4QT_Manual_399-1291-03US_F7/8/25 9:42 AM 7/8/25 9:42 AM 2025.ind

How to slow cook

Prep

Cut, chop, season or marinate your ingredients according to your recipe.

Cook

1. Place the cooking pot into the multi-cooker base and add ingredients.
2. Place the lid on top of the multi-cooker base and lock the lid.
3. Press **Slow Cook**. The default or last-used cooking settings display.
4. To change the cooking time, press **Time/Temp** until the time flashes. Press the ∧ **Up** or ∨ **Down** arrows to select a time.

   You can change the cooking time at any time during cooking.
5. To change the cook setting, press **Time/Temp** until the temp flashes. Press the ∧ **Up** or ∨ **Down** arrows to toggle between **Low** and **High** options.
6. To turn off Keep Warm, press **Keep Warm**.

   You can activate Keep Warm at any time during cooking.
7. To start cooking at a later time, press **Delay Start**, then press the ∧ **Up** or ∨ **Down** arrows to select a delay time.
8. Press ▷ **Start**. The Progress Indicator shows **Cook** and the cooking timer starts counting down.

   *You can press ✕ **Cancel** to stop cooking at any time.*

Stop cooking

1. When the timer reaches 00:00, cooking stops. The Status Display shows **End**.
2. If Keep Warm is ON, the timer starts counting up.

   *Press ✕ **Cancel** at any time to turn it off.*

140-8006-01_140-8003-01_140-8004-01_140-8005-01_RIO-MINI_National_US_4QT_Manual_399-1291-03US_F7/8/25 9:42 AM 7/8/25 9:42 AM 2025.ind

SAUTÉ

Use Sauté in place of a frying or saucepan. Sautéing can deepen the flavors of your food, or can simmer, thicken or reduce sauces. Sauté does not use pressure to cook food.

Choose from these settings in the Sauté smart program. The program uses the default settings or the settings you selected the last time you used the Sauté program.

Default Temperature	Temperature Options	Default Cook Time	Min Cook Time	Max Cook Time
High	Low: 104°C / 220°F Medium: 149°C / 300°F High: 190°C / 375°F	30 minutes	1 minute	1 hour

Other settings

- Keep Warm is not available.
- Delay Start is not available.

How to sauté

Prep

Cut, chop, season or marinate your ingredients according to your recipe.

Preheat

1. Place the cooking pot into the multi-cooker base.
2. Press Sauté. The default or last-used cooking settings display.
3. To change the cooking time, press **Time/Temp** until the time flashes. Press the ∧ **Up** or ∨ **Down** arrows to select a time.

   You can change the cooking time at any time during cooking.
4. To change the temperature setting, press **Time/Temp** until the temp flashes. Press the ∧ **Up** or ∨ **Down** arrows to toggle between **Low** and **High** options.
5. Press ▷ **Start**. The Progress Indicator shows **Preheat**.

140-8006-01_140-8003-01_140-8004-01_140-8005-01_RIO-MINI_National_US_4QT_Manual_399-1291-03US_F7/8/25 9:42 AM 7/8/25 9:42 AM 2025.ind

Cook

1. When the Status Display shows **Hot**, add ingredients.

   Do not use the lid while sauteing.

2. The cooking timer starts counting down.

   *You can press ✕ **Cancel** to stop cooking at any time.*

3. When the cooking time reaches 00:00, the Status Display shows **End**.

Sautéing before Pressure or Slow Cooking

Quite often, you'll want to sauté foods to brown them before further cooking them.

1. Sauté ingredients.
2. Press ✕ **Cancel**.

   *You can deglaze the cooking pot now before switching to Pressure Cook or Slow Cook (see **Deglazing** below).*

3. Select the smart program you want to use to cook.

Deglazing

Deglazing is the process of adding a liquid to a hot pan, releasing all of the delicious, caramelized pieces stuck to the bottom.

1. Remove food from cooking pot.
2. Add water, broth, or wine.
3. Use wooden spoon or silicone spatula to loosen food stuck to bottom of the cooking pot.

140-8006-01_140-8003-01_140-8004-01_140-8005-01_RIO-MINI_National_US_4QT_Manual_399-1291-03US_F7/8/25 9:42 AM 2025.ind

YOGURT

You can use your Instant Pot RIO Mini to easily make delicious, fermented dairy and non-dairy yogurt. Yogurt does not use pressure to cook food.

We recommend following a trusted recipe when making yogurt. You can find recipes at **www.instantpot.com**.

Choose from these settings in the Yogurt smart program:

Step	Recommended Temperature	Recommended Time	Min Time	Max Time
Pasteurization	High	3 minutes	Not adjustable	Not adjustable
Fermentation	Medium or Low	According to recipe	30 minutes	99 hours, 30 minutes

Temperature settings

When you follow a recipe for making yogurt, it's helpful to know what the actual temperature settings are.

Temp Level	Temperature
High	85°C / 185°F
Medium	40°C / 104°F
Low	33°C / 91.4°F

Other settings

- Keep Warm is not available.
- Delay Start is not available.

How to make yogurt

Pasteurizing Milk

1. Add milk to the cooking pot and place the cooking pot into the multi-cooker base.
2. Place the lid on top of the multi-cooker base and lock the lid.
3. Press **Yogurt**. The default or last-used cooking settings display.
4. Press the ∧ **Up** or ∨ **Down** arrows to select **High** temperature. The display will show **boiL**. You cannot adjust the cooking time.

140-8006-01_140-8003-01_140-8004-01_140-8005-01_RIO-MINI_National_US_4QT_Manual_399-1291-03US_F7/8/25 9:42 AM 7/8/25 9:42 AM 2025.ind

5. Press ▷ **Start** to begin. The display shows **ON**.
6. When pasteurization finishes, the display shows **End**.
7. Remove the lid and allow the pasteurized milk to cool.

Note: Milk must reach a minimum temperature of 161°F / 72°C for pasteurization to occur.

Adding Culture/Starter

1. Check that the pasteurized milk has cooled to 43°F / 10°C.
2. Add a starter culture to the milk according to package instructions.

   If using plain yogurt as a starter, ensure that it contains an active culture. Mix in 2 tbsp (30 mL) of yogurt per 1 gallon (3.7 L) of milk or follow a trusted recipe.
3. Place the lid back on the multi-cooker base.

Ferment

1. Press **Yogurt**.
2. Press the ⋀ **Up** or ⋁ **Down** arrows to select **Low** or **Medium** temperature. The default cooking time will flash on the display.
3. Press the ⋀ **Up** or ⋁ **Down** arrows to select the fermentation time according to your recipe.

   You can change the fermentation time at any time during fermentation.

   A longer fermentation period will produce tangier yogurt.
4. Press ▷ **Start**. The Progress Indicator shows **Cook.**
5. When fermentation completes, the display shows **End**.
6. Open the lid and transfer the yogurt to a food storage container.
7. Place in the fridge for 12–24 hours to develop flavors.

How much to make?

Minimum Milk Volume	Maximum Milk Volume
4 Cups (32 oz / 1000 mL)	2.7 Quarts (84 oz / 2.5 L)

140-8006-01_140-8003-01_140-8004-01_140-8005-01_RIO-MINI_National_US_4QT_Manual_399-1291-03US_FM 7/8/25 9:42 AM 2025.ind

KEEP WARM

You can use Keep Warm after cooking with the Pressure Cook, Rice and Slow Cook smart programs. You can also use Keep Warm to reheat food. Keep Warm does not use pressure to cook food.

Choose from these settings in the Keep Warm smart program. The program uses the default settings or the settings you selected the last time you used the Keep Warm program.

	Temperature Options	Default Time	Min Time	Max Time
Keep Warm	High: 77°C / 171°F	10 hours	NA	NA
Reheat	Low: 62°C / 144°F Med: 68°C / 155°F High: 77°C / 171°F	10 hours	10 minutes	10 hours

Other settings

- Delay Start is not available.

How to keep warm after cooking

1. When Keep Warm is turned ON for a smart program, it automatically starts when cooking is finished. The timer shows the time passed, up to 10 hours.
2. To turn off Keep Warm at any time, press ✕ **Cancel**.

How to reheat

Prep

Place the food to be reheated into the cooking pot.

You can also use an oven-safe baking dish that fits in the cooking pot. Add 1/2-cup to 1 cup of water to the cooking pot to avoid overheating the baking dish.

140-8006-01_140-8003-01_140-8004-01_140-8005-01_RIO-MINI_National_US_4QT_Manual_399-1291-03US_F7/8/25 9:42 AM 7/8/25 9:42 AM 2025.ind

Reheat

1. Place the cooking pot into the multi-cooker base.
2. Place the lid on top of the multi-cooker base.
3. Press **Keep Warm**. The default or last-used cooking settings display.
4. To change the cooking time, press **Time/Temp** until the time flashes. Press the ∧ **Up** or ∨ **Down** arrows to select a time.

   You can change the cooking time at any time during cooking.
5. To change the temperature setting, press **Time/Temp** until the temp flashes. Press the ∧ **Up** or ∨ **Down** arrows to toggle between **Low**, **Med** and **High** options.
6. Press ▷ **Start**. The Progress Indicator shows **Warm** and the Status Display shows the timer counting down.
7. When reheating completes, the display shows **End**.
8. To turn off Keep Warm at any time, press ✕ **Cancel**.

140-8006-01_140-8003-01_140-8004-01_140-8005-01_RIO-MINI_National_US_4QT_Manual_399-1291-03US_F7/8/25 V9.4.27AM 7/8/25 9:42 AM 2025.ind

DELAY START

You can use Delay Start to delay the beginning of a cooking program or to set a timer (even if you're not cooking in your Instant Pot).

	Default Time	Min Time	Max Time
Delay start	6 hours	10 minutes	24 hours
Timer	10 minutes	1 minute	1 hour

Delay Start is not available with the Sauté, Yogurt or Keep Warm smart programs.

Delay the start of cooking

1. Select a smart program, adjust the settings as you want, then press **Delay Start**.
2. Press the **Up** or **Down** arrows to select a time.
3. Press **Start**. The timer counts down.
4. When Delay Start ends, the smart program begins automatically.

Set a timer (without cooking)

1. When the Status Display shows **Off**, press **Delay Start**.
2. Press the **Up** or **Down** arrows to select a time.
3. Press **Start** to begin the timer.

140-8006-01_140-8003-01_140-8004-01_140-8005-01_RIO-MINI_National_US_4QT_Manual_399-1291-03US_F7/8/25 9:42 AM 7/8/25 9:42 AM 2025.ind

MAINTENANCE

Your Instant Pot RIO Mini includes parts that enable pressure cooking. **These parts must be installed for pressure cooking to work properly and either cleaned or replaced regularly.**

⚠WARNING

Failure to adhere to safety instructions may result in personal injury and/or property damage and may void your warranty.

Sealing ring

When the pressure cooking lid is closed, the sealing ring installed on the underside of the lid creates an air-tight seal between the lid and the multi-cooker base.

- The sealing ring must be installed before using the multi-cooker and should be cleaned after each use.
- Install 1 sealing ring at a time; use one for sweet dishes and one for savory.
- Sealing rings stretch over time with normal use. To keep your product safe, replace the sealing ring every 12 to 18 months. Replace sooner if you notice stretching, deformation, or damage.

140-8006-01_140-8003-01_140-8004-01_140-8005-01_RIO-MINI_National_US_4QT_Manual_399-1291-03US_F7/8/25 9:42 AM 2025.ind

Install the Sealing Ring

1. Place the sealing ring behind the sealing ring rack and press it into place. Press down firmly to ensure there is no puckering.
2. The sealing ring should be snug and should not fall out when the lid is turned over.

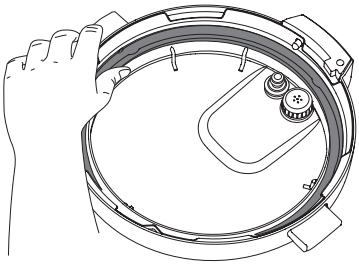

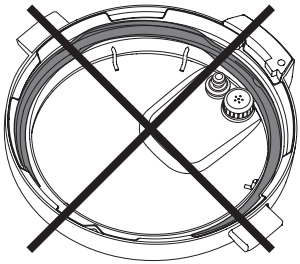

Remove the Sealing Ring

1. Grip the edge of the sealing ring and pull it out from behind the sealing ring rack.
2. Inspect the rack to ensure it is secured, centered, and an even height all the way around the lid. If the sealing ring rack is deformed, do not try to repair it.

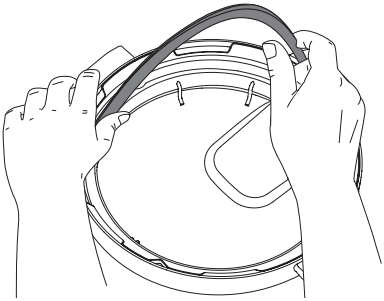

140-8006-01_140-8003-01_140-8004-01_140-8005-01_RIO-MINI_National_US_4QT_Manual_399-1291-03US_F7/8/25 V9.42AM-2025.ind

Anti-block shield

The anti-block shield prevents food particles from coming up through the steam release pipe, helping to regulate pressure.

As an integral part of product safety, the anti-block shield must be installed before use and cleaned frequently.

Remove the Anti-Block Shield

Turn the lid over and hold it securely with one hand. Use the other hand to grasp the Anti-Block Shield with your fingers and pull firmly to remove it from the prongs underneath .

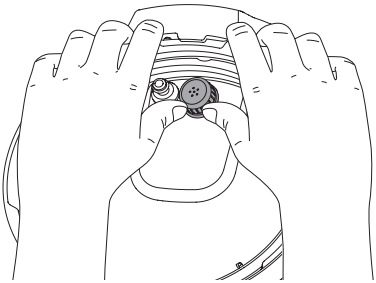

Install the Anti-Block Shield

Place anti-block shield over prongs and press down until it snaps into position. Do not attempt to operate the pressure multi-cooker without the anti-block shield installed.

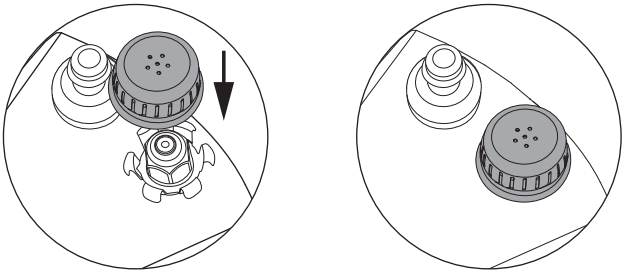

140-8006-01_140-8003-01_140-8004-01_140-8005-01_RIO-MINI_National_US_4QT_Manual_399-1291-03US_F7/8/25 9:42 AM 7/8/25 9:42 AM 2025.ind

Setting up the condensation collector

The condensation collector sits at the back of the multi-cooker base and accumulates overflow moisture from the condensation rim. It should be installed before cooking, then emptied and rinsed out after each use.

Install the condensation collector

Align the grooves on the condensation collector with the tabs on the back of the multi-cooker base and slide the condensation collector into place.

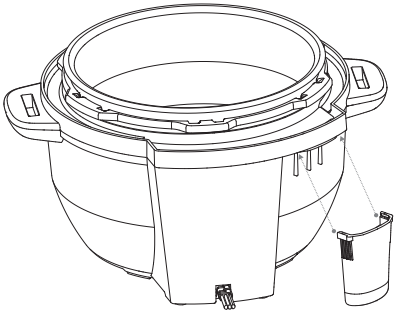

Remove the condensation collector

Pull the condensation collector away from the multi-cooker base; do not pull down.

Note the tabs on the multi-cooker base and the grooves on the condensation collector.

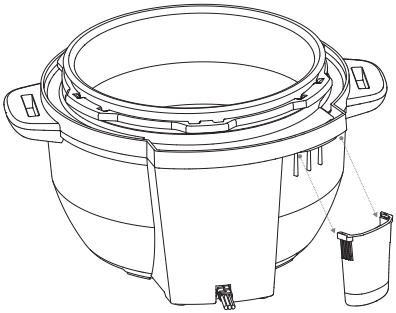

140-8006-01_140-8003-01_140-8004-01_140-8005-01_RIO-MINI_National_US_4QT_Manual_399-1291-03US_FM8/25V9.43AM-2025.ind

CLEANING

Clean your Instant Pot RIO Mini after each use. Always unplug the unit and let all parts cool to room temperature before cleaning. Before use or storing, make sure all surfaces are dry.

Part	Cleaning instructions
Accessories • Steam Rack	• Wash after each use. • Hand wash with hot water and mild dish soap or wash in dishwasher, top rack. • Never use harsh chemical detergents, powders or scouring pads on accessories.
Lid and Parts • Anti-Block Shield • Sealing Ring • Condensation Collector	• Hand wash with hot water and mild dish soap. • Remove all small parts from lid before washing. • With steam release valve and anti-block shield removed, clean interior of steam release pipe to prevent clogging. • After cleaning, store the lid upside down on the multi-cooker base. • Store sealing rings in a well-ventilated area to disperse odor. • To eliminate odors from sealing ring, add 1 cup (8 oz / 250 mL) water and 1 cup (8 oz / 250 mL) white vinegar to cooking pot, and run Pressure Cook for 5–10 minutes, then use Quick Steam Release. • Empty and rinse condensation collector after each use.
Cooking Pot	• Wash after each use. • Hand wash with hot water and mild dish soap or wash in dishwasher*. • Hard water stains may need a vinegar-dampened sponge and scrubbing to remove. • For tough or burned food residue, soak in hot water for a few hours before cleaning. • Dry all exterior surfaces before placing in multi-cooker base.
Power cord	• Use a barely-damp cloth to wipe any particles off cord.
Cooker base	• Wipe the inside of the multi-cooker base as well as the condensation rim with a barely-damp cloth, and allow to air dry. • Clean the outside of the multi-cooker base and the control panel with a soft, barely-damp cloth or sponge.

**Some discoloration may occur after machine washing, but this will not affect the multi-cooker's safety or performance.*

140-8006-01_140-8003-01_140-8004-01_140-8005-01_RIO-MINI_National_US_4QT_Manual_399-1291-03US_F7/8/25 9:43 AM 7/8/25 9:43 AM 2025.ind

TROUBLESHOOTING

Problem	Cause	Solution
Difficulty closing lid	Sealing ring not properly installed	Reposition sealing ring, ensure it is snug behind sealing ring rack.
	Contents in multi-cooker are still hot	Set Steam Release to Quick release, then lower lid onto multi-cooker base .
Difficulty opening lid	Pressure inside the multi-cooker	Release pressure according to recipe; only open lid when the Status Display shows **OK to Open Lid**.
Cooking pot is stuck to lid when cooking is complete	Cooling of cooking pot may create suction, causing cooking pot to adhere to the lid	To release the vacuum, set Steam Release to Quick Release.
Steam leaks from side of lid	No sealing ring in lid	Install sealing ring.
	Sealing ring damaged or not properly installed	Replace sealing ring.
	Food debris attached to sealing ring	Remove sealing ring and clean thoroughly.
	Lid not closed properly	Open, then close lid.
	Sealing ring rack is warped or off-center	Remove sealing ring from lid, check sealing ring rack for bends or warps. Contact Consumer Care.
	Cooking pot rim may be misshapen	Check for deformation and contact Consumer Care.
Minor steam leaking/hissing from steam release vent during cooking cycle	Cooker is regulating excess pressure	This is normal; no action required.
Steam gushes from steam release vent when Steam Release switch is in Seal position	Not enough liquid in the cooking pot	Add thin, water-based liquid to the cooking pot: 1 1/2 cups (12 oz / 375 mL).
	Pressure sensor control failure	Contact Consumer Care.

140-8006-01_140-8003-01_140-8004-01_140-8005-01_RIO-MINI_National_US_4QT_Manual_399-1291-03US_F7/8/25 9:43 AM 7/8/25 9:43 AM 2025.ind

Problem	Cause	Solution
Display remains blank after plugging in the power cord	Bad power connection or no power	Inspect power cord for damage. If damage is noticed, contact Consumer Care. Check outlet to ensure it is powered.
	Cooker's electrical fuse has blown	Contact Consumer Care.
Occasional clicking or light cracking sound	The sound of power switching and expanding pressure board when changing temperatures	This is normal; no action needed.
	Bottom of the cooking pot is wet	Wipe exterior surfaces of cooking pot. Ensure heating element is dry before inserting cooking pot into multi-cooker base.
Error code appears on display and multi-cooker beeps continuously	There is an issue with the multi-cooker	Read "Error Codes" for instructions.

140-8006-01_140-8003-01_140-8004-01_140-8005-01_RIO-MINI_National_US_4QT_Manual_399-1291-03US_F7/8/25N9:37AM1-2025.indd

ERROR CODES

If the control panel shows an error code from this list, there is an issue with the Instant Pot RIO Mini. Here are the actions you should take to fix the problem.

Problem	Cause	Solution
C1	Faulty sensor	Contact Consumer Care.
C6H	Issue with pressure switch	Contact Consumer Care.
C7	Pressure not building properly	Make sure the sealing ring is installed correctly. If issue persists, contact Consumer Care.
PrSE	Pressure has accumulated during the Sauté program	Set Steam Release to Quick release.
Open Lid	The lid is on the base but not locked during the Sauté program	Do not use the lid when using the Sauté Smart Program.
Lid Err	The lid is not locked during pressure cooking	Make sure the lid is on the cooking base correctly and set to 'lock'.
Food burn	High temperature detected at bottom of cooking pot; multi-cooker automatically reduces temperature to avoid overheating	Turn the Smart Program off, release pressure according, and make sure there is enough liquid in the bottom of the cooking pot.

140-8006-01_140-8003-01_140-8004-01_140-8005-01_RIO-MINI_National_US_4QT_Manual_399-1291-03US_F7/8/25N9:37AM1-2025.ind

REPLACEMENT PARTS

We offer genuine replacement parts for your Instant Pot RIO Mini multi-cooker, if you need them. Visit www.instantpot.com to order.

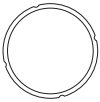

	Part	Part number
	Stainless Steel Inner Cooking Pot	212-0150-01
	Steam Rack	310-1033-01
	Sealing Ring	211-0001-01
	Condensation Collector	310-0001-01
	Steam Release Valve	310-0022-01
	Float Valve	310-0098-01
	Anti-Block Shield	310-0006-01
	Manual	399-1291-03US

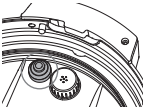

140-8006-01_140-8003-01_140-8004-01_140-8005-01_RIO-MINI_National_US_4QT_Manual_399-1291-03US_F7/8/25 9:43 AM 2025.ind

LEARN MORE

There's a whole world of Instant Pot® cooking information and help just waiting for you. Here are some of the most helpful resources.

Register your product

Instantpot.com/register

Contact Consumer Care

In the Instant Connect™ App
Instantpot.com/customer-care-center
support@instantpot.com

Download the Instant Connect™ App

Discover guided cooking and recipes
Available at iOS and Android app stores

Cooking charts and more recipes

Instantpot.com

How-to videos, tips and more

Instantpot.com

Replacement parts and accessories

Instantpot.com

Join the community

Product specifications

Model	Volume	Wattage	Power
RIPC41	4 Quarts 3.8 Litres	800 W	120V ~ 60Hz

140-8006-01_140-8003-01_140-8004-01_140-8005-01_RIO-MINI_National_US_4QT_Manual_399-1291-03US_F7/8/25 9:43 AM 7/8/25 9:43 AM 2025.ind

WARRANTY

One (1) Year Limited Warranty

This One (1) Year Limited Warranty applies to purchases made one year from the purchase date or delivery date, whichever is later, from authorized retailers of Instant Pot Brands by the original appliance owner and is not transferable. Proof of original purchase date and, if requested by Instant Pot Brands, return of your appliance, is required to obtain service under this Limited Warranty. Provided the appliance was used in accordance with the use & care instructions, Instant Pot Brands will, in its sole and exclusive discretion, either: (i) repair defects in materials or workmanship; or (ii) replace the appliance. In the event that your appliance is replaced, the Limited Warranty on the replacement appliance will expire twelve (12) months from the date of receipt. Failure to register your product will not reduce your warranty rights. The liability of Instant Pot Brands, if any, for any allegedly defective appliance or part will not exceed the purchase price of a comparable replacement appliance.

What is not covered by this warranty?

- Products purchased, used, or operated outside of the United States and Canada.
- Products that have been modified or attempted to be modified.
- Damage resulting from accident, alteration, misuse, abuse, neglect, unreasonable use, use contrary to the operating instructions, normal wear and tear, commercial use, improper assembly, disassembly, failure to provide reasonable and necessary maintenance, fire, flood, acts of God, or repair by anyone unless directed by an Instant Pot Brands representative.
- Use of unauthorized parts and accessories.
- Incidental and consequential damages.
- The cost of repair or replacement under these excluded circumstances.

EXCEPT AS EXPRESSLY PROVIDED HEREIN AND TO THE EXTENT PERMITTED BY APPLICABLE LAW, INSTANT POT BRANDS MAKES NO WARRANTIES, CONDITIONS OR REPRESENTATIONS, EXPRESS OR IMPLIED, BY STATUTE, USAGE, CUSTOM OF TRADE OR OTHERWISE WITH RESPECT TO THE APPLIANCES OR PARTS COVERED BY THIS WARRANTY, INCLUDING BUT NOT LIMITED TO, WARRANTIES, CONDITIONS, OR REPRESENTATIONS OF WORKMANSHIP, MERCHANTABILITY, MERCHANTABLE QUALITY, FITNESS FOR A PARTICULAR PURPOSE OR DURABILITY.

140-8006-01_140-8003-01_140-8004-01_140-8005-01_RIO-MINI_National_US_4QT_Manual_399-1291-03US_F7/8/25 V9:43 AM 7/8/25 9:43 AM 2025.ind

Some states or provinces do not allow for: (1) the exclusion of implied warranties of merchantability or fitness; (2) limitations on how long an implied warranty lasts; and/or (3) the exclusion or limitation of incidental or consequential damages; so these limitations may not apply to you. In these states and provinces, you have only the implied warranties that are expressly required to be provided in accordance with applicable law. The limitations of warranties, liability, and remedies apply to the maximum extent permitted by law. This limited warranty gives you specific legal rights, and you may also have other rights which vary from state to state or province to province.

Product Registration

Please visit **www.instantpot.com/register** to register your new Instant Pot Brands appliance. Failure to register your product will not diminish your warranty rights. You will be asked to provide the store name, date of purchase, model number (found on the back of your appliance) and serial number (found on the bottom of your appliance) along with your name and email address. The registration will enable us to keep you up to date with product developments and recipes, and contact you in the unlikely event of a product safety notification. By registering, you acknowledge that you have read and understand the instructions for use, and warnings set forth in the accompanying instructions.

Warranty Service

To obtain warranty service, please contact our Consumer Care Department by email to **support@instantpot.com**. You can also create a support ticket online at **www.instantpot.com**. If we are unable to resolve the problem, you may be asked to send your appliance to the Service Department for quality inspection. Instant Pot Brands is not responsible for shipping costs related to warranty service. When returning your appliance, please include your name, mailing address, email address, phone number, and proof of the original purchase date as well as a description of the problem you are encountering with the appliance.

140-8006-01_140-8003-01_140-8004-01_140-8005-01_RIO-MINI_National_US_4QT_Manual_399-1291-03US_F7/8/25 9:43 AM 7/8/25 9:43 AM 2025.ind

⚠WARNING

DO NOT place this appliance on or close to a gas or electric burner, or inside an oven. NEVER use on your stove. Always operate this appliance on a stable, non-combustible, level surface, such as a kitchen countertop.

In Canada, distributed by
Instant Pot Brands
199 Bay Street, Suite 4000
Toronto, ON M5L 1A9 Canada

In U.S., distributed by
Instant Pot Brands
8725 W Higgins Road, Suite 725
Chicago, IL 60631 U.S.

instantpot.com

© 2025 Instant Pot Brands

399-1291-03US

Art release date
07/08/2025

INSTANT POT
is a registered trademark
of Instant Pot Brands