

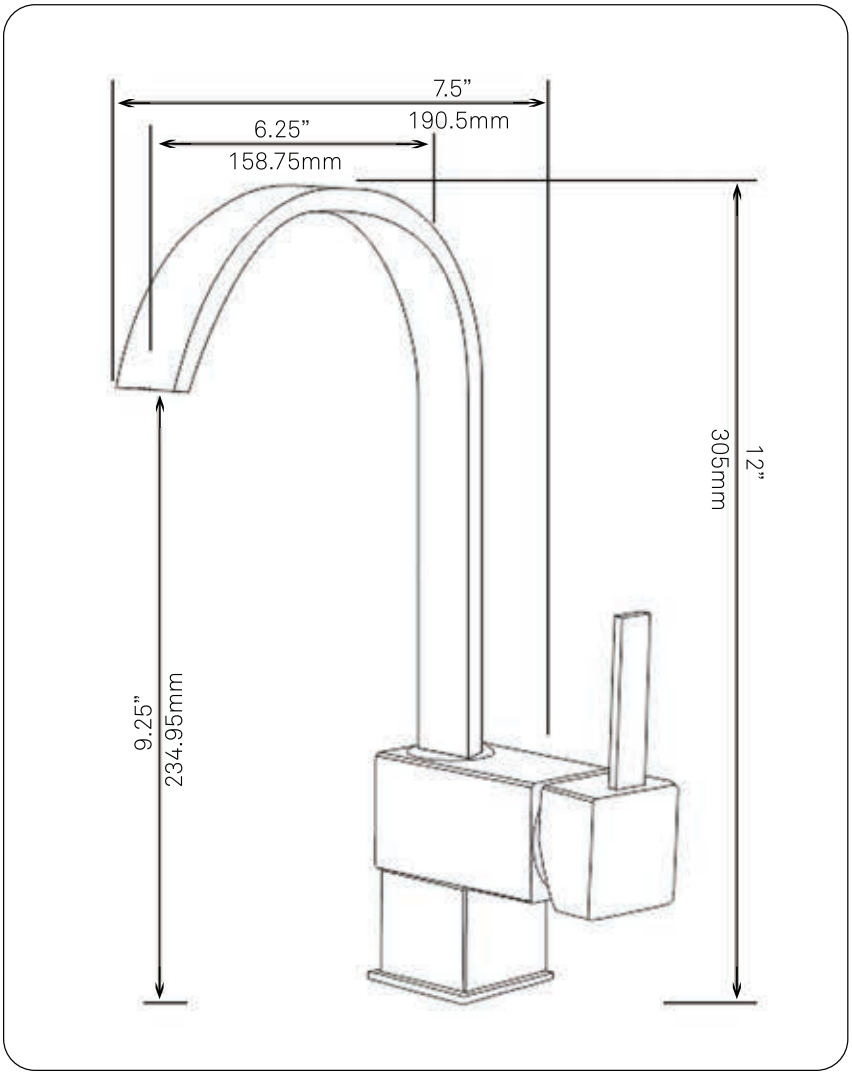

NBPF-108MB WRIGHT Single Handle Pivotal Bar Faucet, Matte Nlack

Requested By: _____

Specific Features: _____

STANDARD SPECIFICATIONS:

- 180-degree pivot
- Solid brass construction
- Matte black finish
- Drip free high pressure ceramic cartridge
- Single hole deck mount installation
- 1.5-inch mounting hole diameter
- AB1953 low lead compliant
- CUPC (ASME A112.18.1-2012/CSA B125.1-12)
- NSF 372/61 and ANSI 61 certified
- CEC (California Energy Commission)
- ADA compliant

WARRANTY:

Limited lifetime warranty
- See www.NovattoInc.com for details

COORDINATING ACCESSORIES:

- Glacier Ice Restoration and Sealer kit

NOTES

Novatto reserves the right (1) to make changes in specifications and materials, and (2) to change or discontinue models, both without notice or obligation. Dimensions are for reference only, see www.NovattoInc.com for finish options and product availability.

Novatto Inc
TOLL FREE 844.404.4242
www.NovattoInc.com