Assembly Instructions

Caution : You must read this before you proceed

Care & Maintenance

Ø 
- Not for commercial use. For residential use only.

P 
- Furniture may scratch floors. We recommend using furniture pads to protect your floors.

Ø 
- Do not put hot items directly on furniture surface.

Ø 
- Do not clean furniture with harsh cleansers or polish.

Ø 
- Do not place furniture under direct sunlight.

Ø 
- Do not place furniture near heating or cooling vents.

Ø 
- Do not write on furniture without a padded barrier to protect the surface.

Ø 
- Do not place furniture outside . For indoor use only.

Ø 
- Stains may be removed with mild soap solution and damp cloth.

Ø 
- Children should not climb or jump on the furniture.

P 
- Dust and pick-up spills using a clean, non-colored, lint-free cloth.

Please look in carton for hardware packs and legs.
Sets often ship in multiple boxes and may arrive a day or two apart.

BENCH
N778P446782

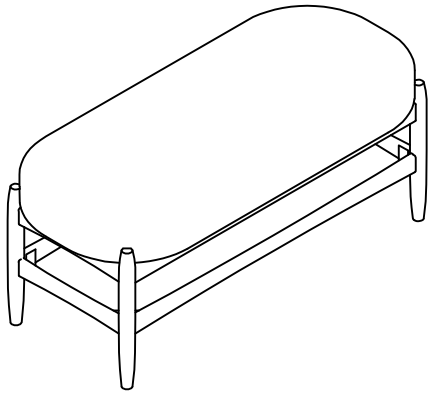

Parts List

Label	Picture	Description	QTY
A	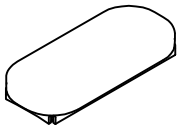	Seat	1
B	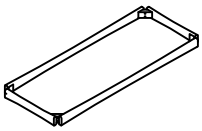	Frame	1
C		Legs	4

Hardware

Label	Picture	Description	QTY
1	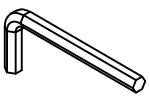	Allen Wrench 4mm	1
2		Bolt Ø5/16" x 60mm	16+1
3		Spring Washer Ø5/16"	16+1
4		Flat Washer Ø5/16"	16+1

Assembly Preparation

Before Bebinning Assembly:

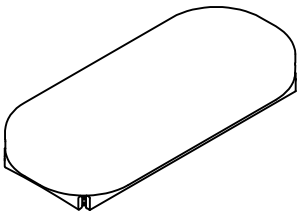

A x 1

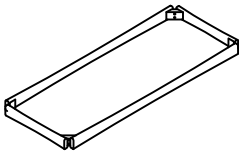

B x 1

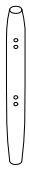

C x 4

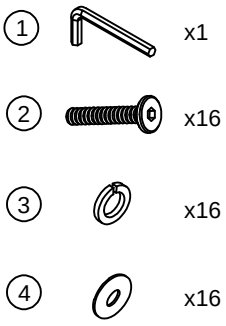

- Read instructions, cover to cover.
- Have 2 adults on hand for assembly.
- Do not assemble on flooring or carpet.
- Assemble on a clean non-marring surface (packing foam).
- Save all packaging until finished.

Assembly Steps

Overview

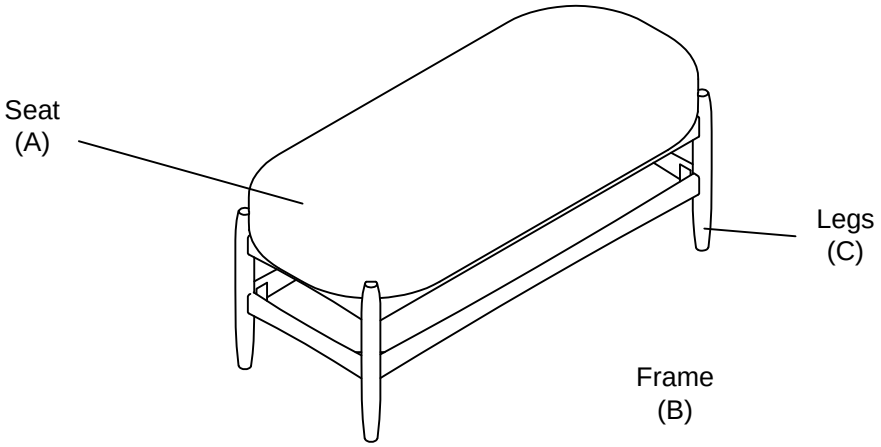

This Bench has multiple parts and may require up to some 30 minutes to assemble. To give you an overview of the Bench parts, the above picture is to help you put the various parts into perspective. Please read through the instructions below to familiarise yourself with the parts and steps before assembly.

Step 1:

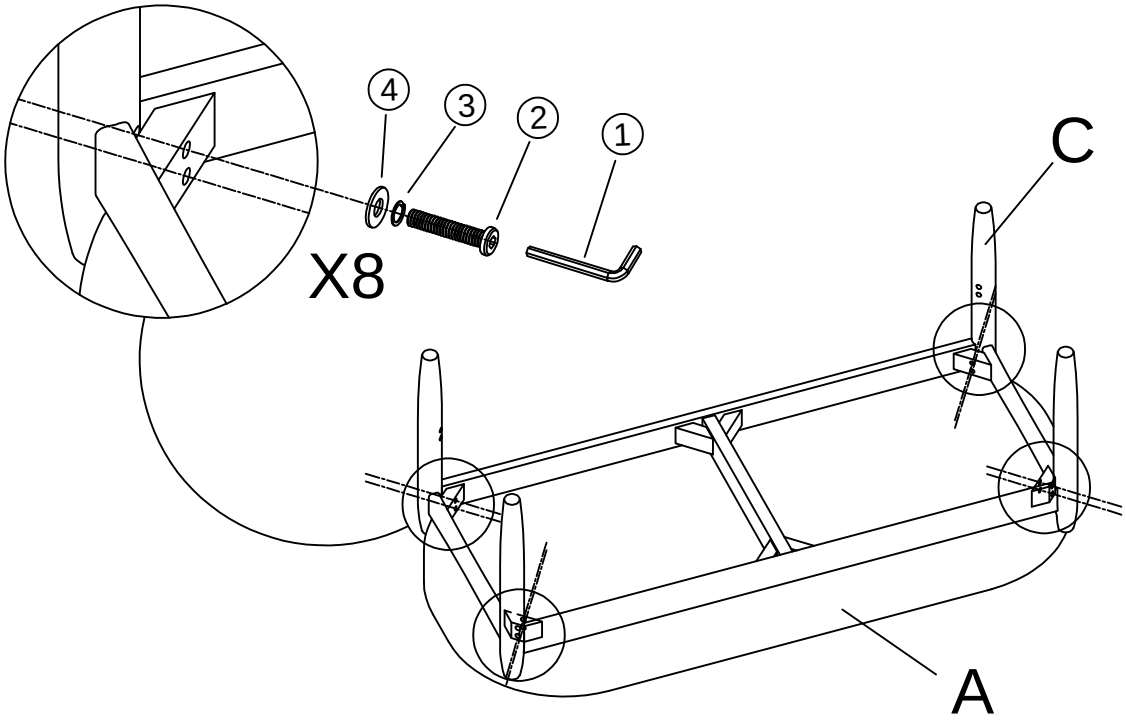

Attach Legs (C) to Seat (A) by using Bolt (2), Spring Washer (3), Flat Washer (4) and Allen Wrench (1).

Step 2:

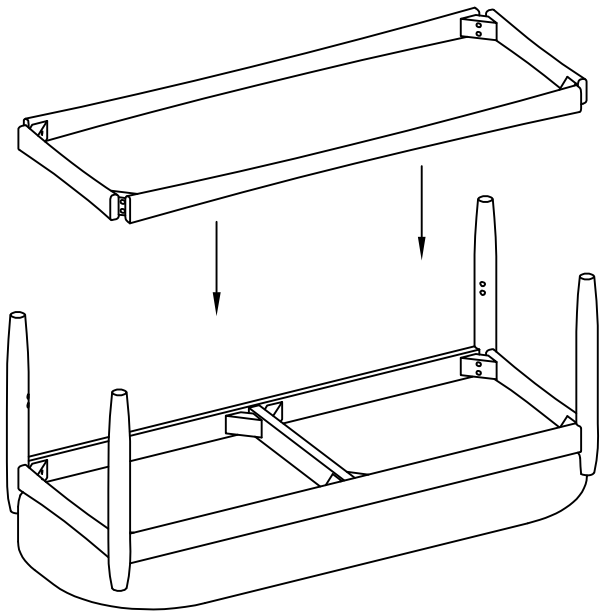

Move Frame (B) into the correct position.

Step 3:

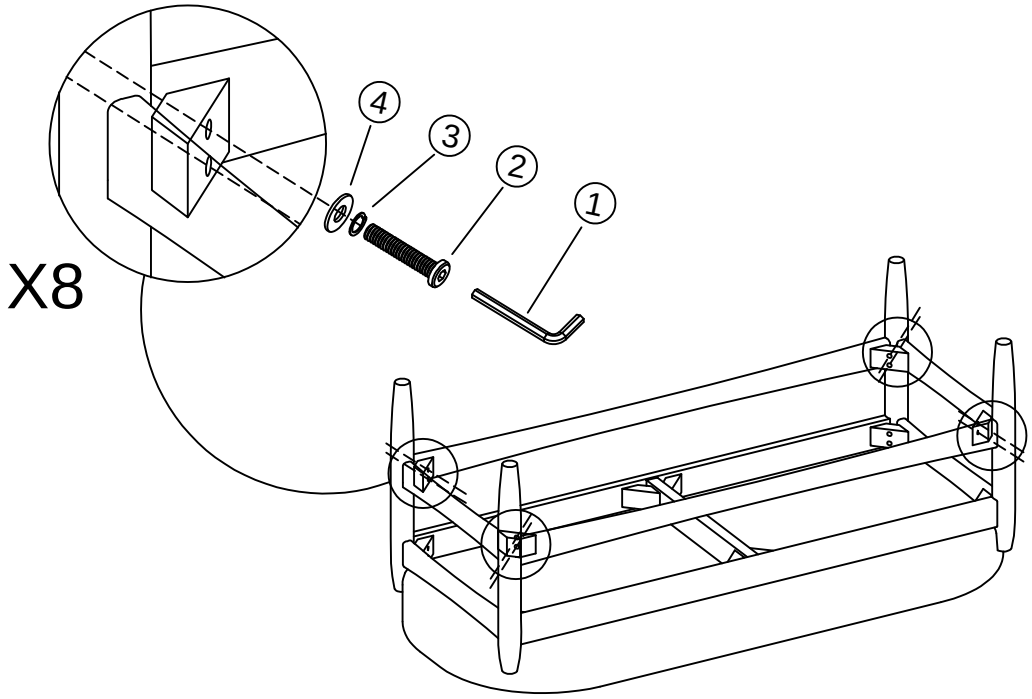

Attach Frame (B) to Legs (C) by using Bolt (2), Spring Washer (3), Flat Washer (4) and Allen Wrench (1).

Finish

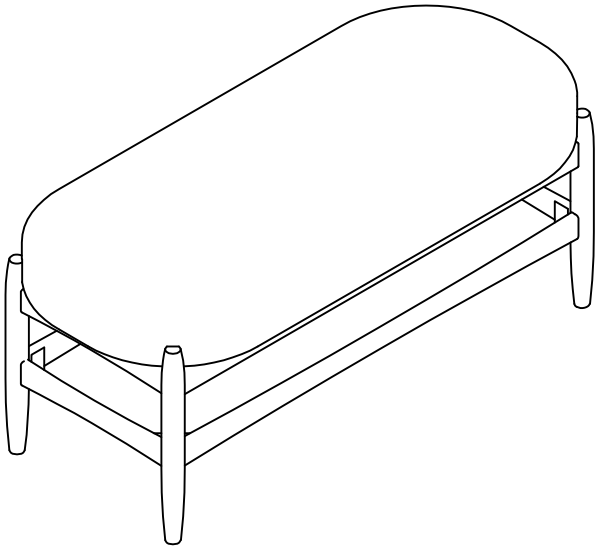

This Bench is ready for use.
This Bench can only be used on a flat, level surface.