ONLY FOR REFERENCE

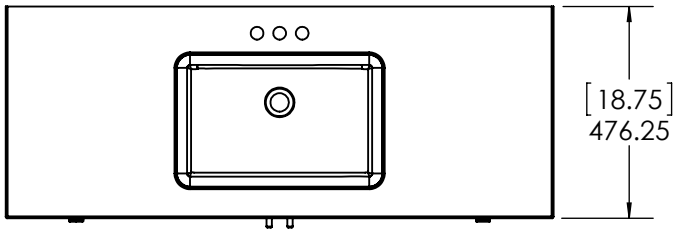

TOP VIEW

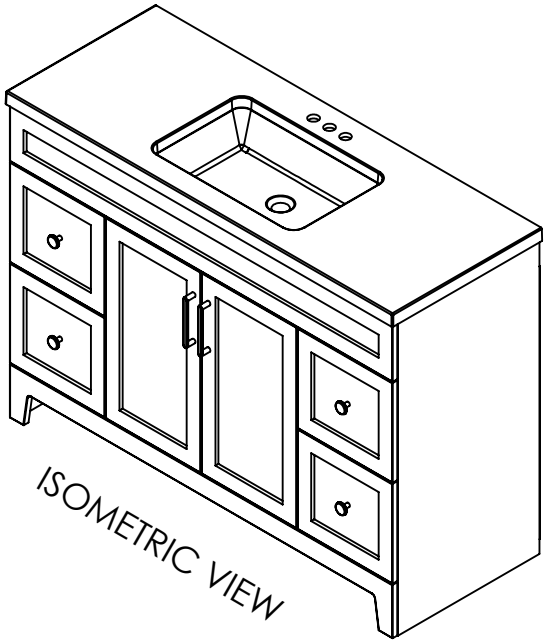

ISOMETRIC VIEW



FRONT VIEW

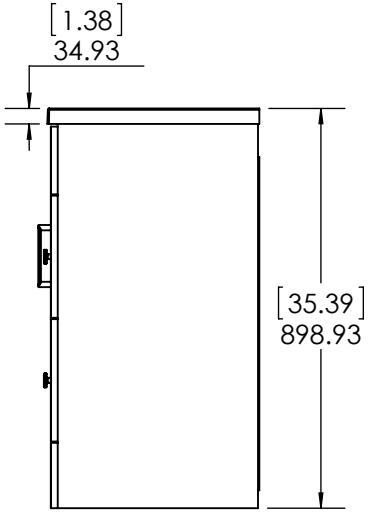

SIDE VIEW

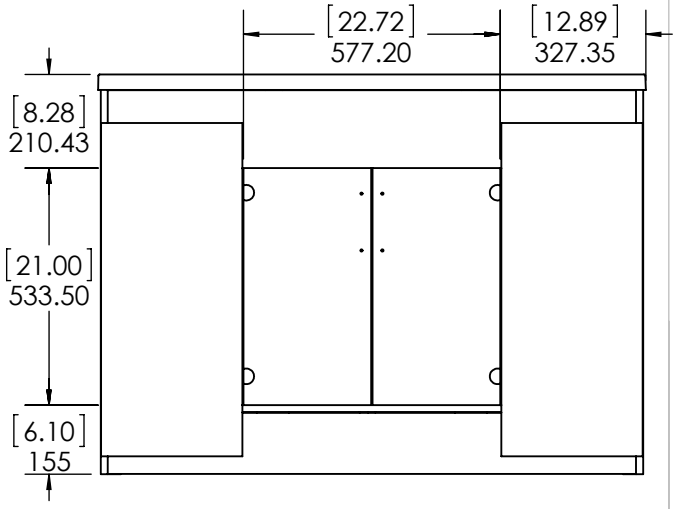

BACK VIEW

DWR	GUVM	07/09/24
REV	ING	
APR	R&D	

ITEM: **W075548P2**

REV **A**

NAME: 48in W0755 2Pc

MATERIAL: ----

ONLY FOR REFERENCE

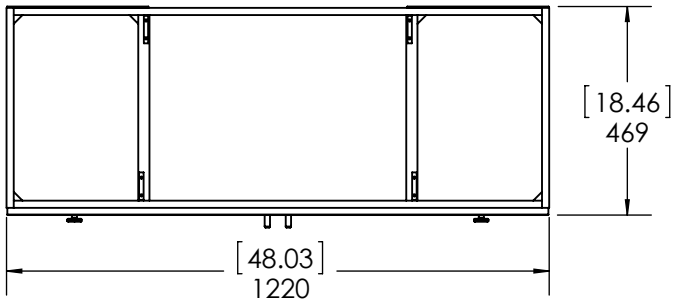

TOP VIEW

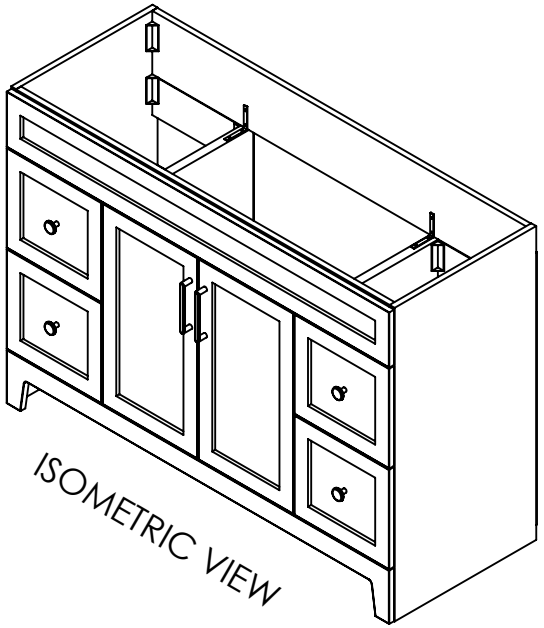

ISOMETRIC VIEW

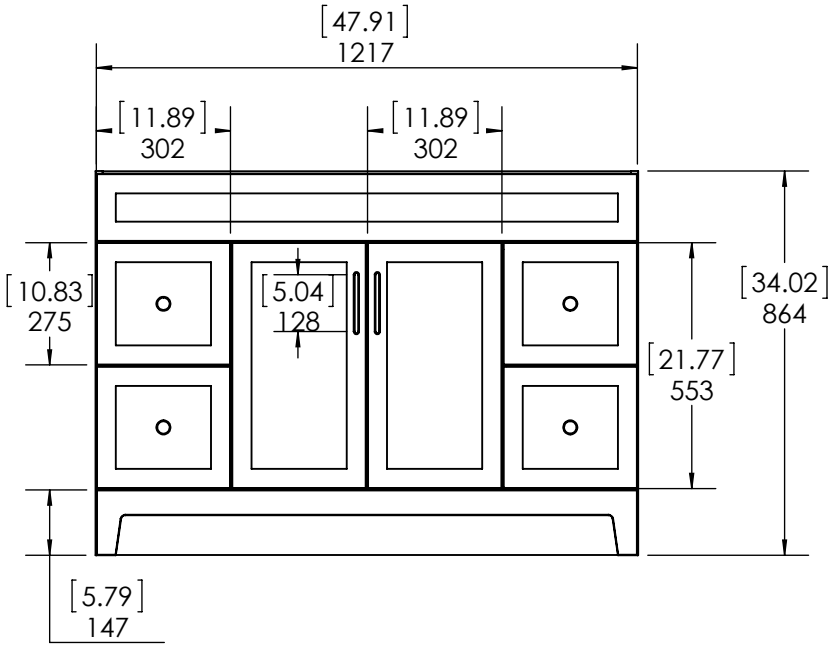

FRONT VIEW

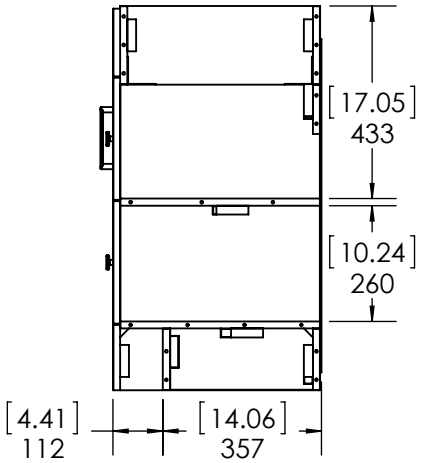

SIDE VIEW

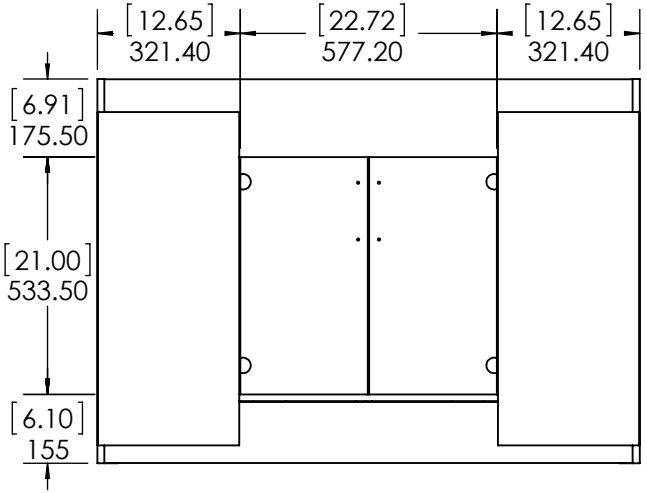

BACK VIEW

DWR	GUVM	07/09/24
REV	ING	
APR	R&D	

ITEM: **W075548P2**

REV **A**

NAME: 48in W0755 2Pc

MATERIAL: ----

ITEM TYPE	ITEM ID	ITEM DESCRIPTION	DRAWING STATUS
FG	59xxxx	Vtop Vertuo 48.5x18.75 4in CM White	R&D

REV	DESCRIPTION	DATE	APPROVAL
0	RELEASED	7/13/20	E. SANDOVAL

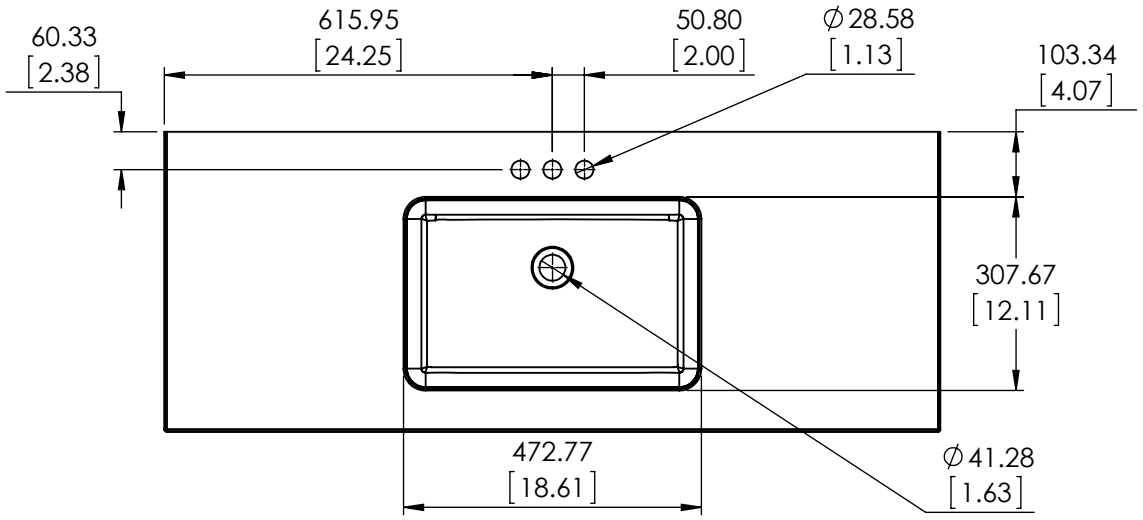

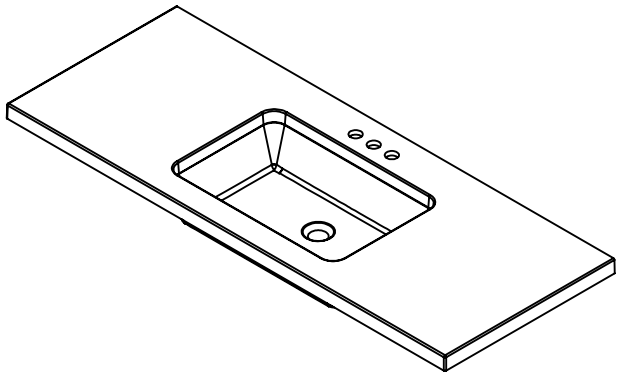

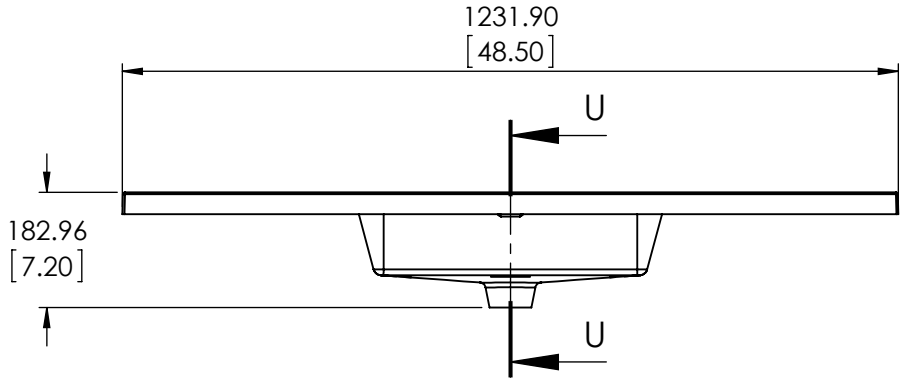

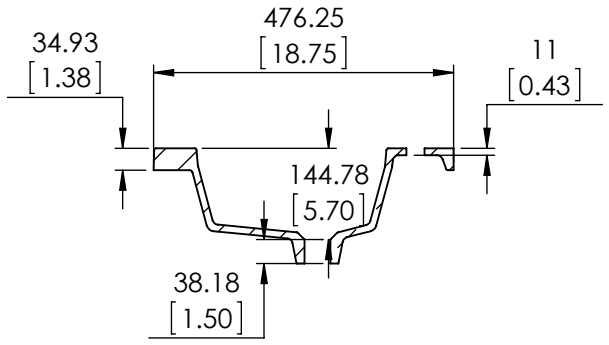

SECTION U-U
SCALE 1 : 12

PROPRIETARY AND CONFIDENTIAL
THE INFORMATION CONTAINED IN THIS DRAWING IS THE SOLE PROPERTY OF WOODCRAFTERS. ANY REPRODUCTION IN PART OR AS A WHOLE WITHOUT THE WRITTEN PERMISSION OF WOODCRAFTERS IS PROHIBITED.

UNLESS OTHERWISE SPECIFIED
DIMENSIONS ARE IN MM. AND [INCHES]
TOLERANCES ARE
+ 3.175 [.125] - 3.175 [0.125]
SCALE:1:10

	NAME	DATE
DRAWN	O. RAZO	7/13/2020
CHECKED	E. SANDOVAL	7/13/2020
ENG APPR.	W. AMAYA	7/13/2020
MFG APPR.	A. CASIANO	7/13/2020

SIZE A | DWG. NO. FG | SHEET 1 OF 1