SPLIT TYPE AIR CONDITIONER

INSTRUCTION MANUAL

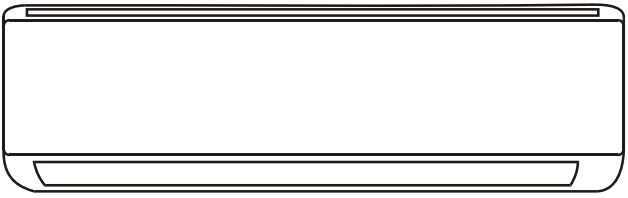

This instruction manual contains important information and recommendations that we would ask you to comply with to obtain best results from air conditioner.

Thank you once again.

Made in China

Safety Notice

A2L A2L	Caution: Risk of fire. The air conditioner is charged with inflammable refrigerant R32.
	Before using the air conditioner, please read the instruction manual first.
	Before installing the air conditioner, please read the instruction manual first.
	Before repairing the air conditioner, please read the technical service manual first.

Compared with common refrigerant, R32 is an environmental-friendly refrigerant that has no harm to the ozone layer and weak greenhouse effect. Its GWP is 675. Because of its thermodynamic characteristics, R32 requires a smaller charging quantity to reach high energy efficiency. It is inflammable and odourless, but may cause explosion under certain circumstances.

CONTENTS

Precautions ····· 1
Instruction for Servicing(R32) ····· 4
Names of Parts ····· 18
Display Panel ····· 20
Indoor Unit Installation ····· 21
Outdoor Unit Installation ····· 27
Refrigerant Pipes Installation ····· 31
Electric Wiring ····· 35
Test Operation ····· 39
Maintenance ····· 41
Troubleshooting ····· 42
Disposal Guideline ····· 44

* The design and specifications are subject to change without prior notice for product improvement. Consult with the sales agency or manufacturer for details.

* The shape and position of buttons and indicators may vary according to the model, but their function are the same.

Precautions

SAFETY RULES AND RECOMMENDATIONS FOR THE INSTALLER

1. Read this guide before installing and using the appliance.
2. During the installation of the indoor and outdoor units, access to the working area should be forbidden to children. Unforeseeable accidents could happen.
3. Make sure that the base of the outdoor unit is firmly fixed
4. Check that air cannot enter the refrigerant system and check for refrigerant leaks when turn on the air conditioner.
5. Carry out a test cycle after installing the air conditioner and record the operating data.
6. Protect the unit with a fuse of suitable capacity for the maximum input current or with another overload protection device.
7. Ensure that the mains voltage corresponds to that stamped on the rating plate. Keep the switch or power terminal clean. connect the power terminal correctly and firmly into the socket, there by avoiding the risk of electric shock or fire due to insufficient contact.
8. The appliance must be equipped with devices capable of disconnection from the mains power supply, have a contact separation in all poles to provide full disconnection under "over voltage category III conditions", these devices must also be incorporated into the fixed wiring in accordance with the wiring rules.
9. The air conditioner must be installed by professional or qualified persons. Do not try to install the conditioner alone, always contact specialized technical personnel.
10. Do not install the appliance at a distance of less than 50 cm from inflammable substances (alcohol, etc.) Or from pressurized containers (e.g. spray cans).
11. If the appliance is used in areas without the possibility of ventilation, precautions must be taken to prevent any leaks of refrigerant gas from remaining in the environment and creating a danger of fire.
12. The packaging materials are recyclable and should be disposed of in the separate waste bins. Take the air conditioner at the end of its useful life to a special waste collection center for disposal.
13. Only use the air conditioner as instructed in this booklet. These instructions are not intended to cover every possible condition and situation.As with any electrical household appliance, common sense and caution are therefore always recommended for installation, operation and maintenance.
14. The appliance must be installed in accordance with applicable national regulations.
15. Before accessing the terminals, all the power circuits must be disconnected from the power supply.

16. This appliance can be used by children aged from 8 years and above and persons with reduced physical, sensory or mental capabilities or lack of experience and knowledge if they have been given supervision or instruction concerning use of the appliance in a safe way and under stand the hazards involved. Children shall not play with the appliance. Cleaning and user maintenance shall not be made by children without supervision.
17. Cleaning and maintenance must be carried out by specialized technical personnel. In any case disconnect the appliance from the mains electrictity supply before carrying out any cleaning or maintenance.
18. Do not pull out the power terminal to switch off the appliance when it is in operation, since this could create a spark and cause a fire, etc.
19. This appliance has been made for air conditioning domestic environments and must not be used for any other purpose, such as for drying clothes, cooling food, etc.
20. Always use the appliance with the air filter mounted. Air conditioning without air filter could cause an excessive accumlation of dust and/or lead inner parts function failure.
21. The user is responsible for having the appliace installed by a qualified technician, who must check that earthing/grounding is done in accordance with current legislation and insert a thermos magnetic circuit breaker.
22. The batteries in the remote controller must be recycled or disposed of properly. For disposal of scrap batteries, please discard the batteries as sorted municipal waste at the accessible collection point.
23. Never remain directly exposed to the flow of cold air for a long time. The direct and prolonged exposition to cold air could be dangerous for your health. Particular care should be taken in the rooms where there are children, old or sick people.
24. If the appliance gives off smoke or there is a smell of burning, immediately cut off the power supply and contact the Service Center. The prolonged use of the device in such conditions could cause fire or electrocution.
25. Have repairs carried out only by an authorised Service Center of the manufacturer. Incorrect repair could expose the user to the risk of electric shock, etc.
26. Unhook the automatic switch if you foresee not to use the device for a long time. The airflow direction must be properly adjusted.
27. The flaps must be directed downwards in the heating mode and upwards in the cooling mode.
28. Ensure that the appliance is disconnected from the power supply when it intends to keep inoperative for a long period and before carrying out any cleaning or maintenance.
29. Selecting the most suitable temperature can prevent damage to the appliance.

SAFETY RULES AND PROHIBITIONS

1. Do not bend, tug or compress the power cord since this could damage it. Electrical shocks or fire are probably due to a damaged power cord. Specialized technical personnel only is recommended to replace a damaged power cord.
2. Do not use extensions or gang modules.
3. Do not touch the appliance when barefoot or parts of the body are wet or damp.
4. Do not obstruct the air inlet or outlet of the indoor or the outdoor unit. The obstruction of these openings causes a reduction in the operative efficiency of the conditioner with possible consequent failures or damages.
5. In no way alter the characteristics of the appliance.
6. Do not install the appliance in environments where the air could contain flammable gas, oil or sulphur or near sources of heat.
7. This appliance is not intended for use by persons (including children) with reduced physical, sensory or mental capabilities. or lack of experience and knowledge. unless they have been given supervision or instruction concerning use of the appliance by a person responsible for their safety.
8. Do not climb onto or place any heavy or hot objects on top of the appliance.
9. Do not leave windows or doors open for long when the air conditioner is operating.
10. Do not direct the airflow onto plants or animals.
11. Along direct exposition to the flow of cold air of the conditioner could have negative effects on plants and animals.
12. Do not put the conditioner in contact with water. The electrical insulation could be damaged and thus causing electrocution.
13. Do not climb onto or place any objects on the outdoor unit.
14. Never insert a stick or similar object into the appliance. It could cause injury.
15. Children should be supervised to ensure that they do not play with the appliance.
16. This unit is equipped with a refrigerant leak detector for safety. To be effective, the unit must be electrically powered at all times after installation, other than when servicing.

    (Some models have refrigerant leak sensors, subject to the actual product received.)
17. This refrigerant sensor is only replaced with a manufacturer approved sensor. If the sensor is replaced only as part of the component assembly, the component should be labeled.

    (Some models have refrigerant leak sensors, subject to the actual product received.)
18. The appliance shall be installed according to the manufacturer's instructions, and the ventilation pipe shall not exceed the maximum length and number of turns specified by the manufacturer.
19. Appliances shall be installed according to the instructions. Appliances that can be installed in different locations should be tested in all locations permitted by the manufacturer. The intake or

exhaust openings should not be covered and the manufacturer's recommended air filter should be installed according to the instructions.

20. Avertissement: Avant d'accéder aux bornes de raccordement, tous les circuits d'alimentation doivent être déconnectés.

NOTE(WiFi models only)

This device complies with Part 15 of the FCC Rules. Operation is subject to the following two conditions:

1. This device may not cause harmful interference.
2. This device must accept any interference received, including interference that may cause undesired operation.

Instruction for Servicing(R32)

1. Check the information in this manual to find out the dimensions of space needed for proper installation of the device, including the minimum distances allowed compared to adjacent structures.
2. Appliance shall be installed, operated and stored in a room with a floor area larger than $4m^2$.
3. The installation of pipe-work shall be kept to a minimum.
4. The pipe-work shall be protected from physical damage, and shall not be installed in an unventilated space if the space is smaller than $4m^2$.
5. The compliance with national gas regulations shall be observed.
6. The mechanical connections shall be accessible for maintenance purposes.
7. Follow the instructions given in this manual for handling, installing, cleaning, maintaining and disposing of the refrigerant.
8. Make sure ventilation openings clear of obstruction.
9. **Notice:** The servicing shall be performed only as recommended by the manufacturer.
10. **Warning:** The appliance shall be stored in a well-ventilated area where the room size corresponds to the room area as specified for operation.
11. **Warning:** The appliance shall be stored in a room without continuously operating open flames (for example an operating gas appliance) and ignition sources (for example an operating electric heater).
12. The appliance shall be stored so as to prevent mechanical damage from occurring.
13. It is appropriate that anyone who is called upon to work on a refrigerant circuit should hold a valid and up-to-date certificate from an assessment authority accredited by the industry and recognizing their competence to handle refrigerants, in accordance with the assessment specification recognized in the industrial sector concerned. Service operations should only be carried out in

accordance with the recommendations of the equipment manufacturer. Maintenance and repair operations that require the assistance of other qualified persons must be conducted under the supervision of the person competent for the use of flammable refrigerants.

14. Every working procedure that affects safety means shall only be carried out by competent persons.

15. Warning:

* Do not use any means to accelerate the defrosting process or clean the frost on your own.Follow the recommended guidelines from the manufacturer.
* The appliance shall be stored in a room without continuously operating ignition sources (for example: open flames, an operating gas appliance or an operating electric heater.
* Do not pierce or burn.
* Be aware that refrigerants may not containan odor.

Important Considerations

1. The air conditioner must be installed by professional personnel and the Installation manual is used only for the professional installation personnel! The installation specifications should be subject to our after-sale service regulations.
2. When filling the combustible refrigerant, any of your rude operations may cause serious injury or injuries to human body and objects.
3. A leak test must be done after the installation completed.
4. It is a must to do the safety inspection before maintaining or repairing an air conditioner using combustible refrigerant in order to ensure that the fire risk is reduced to minimum.
5. It is necessary to operate the machine under a controlled procedure in order to ensure that any risk arising from the combustible gas or vapor during the operation is reduced to minimum.
6. Requirements for the total weight of filled refrigerant and the area of a room to be equipped with an air conditioner (are shown as in the following Tables GG.1 and GG.2)

The maximum charge and the required minimum floor area

m_1 = (6 m^3) x LFL , m_2 = (52 m^3)) x LFL, m_3 = (260 m^3)x LFL

Where LFL is the lower flammable limit in kg/ m^3,R32 LFL is 0.306 kg/ m^3.

For the appliances with a charge amount $m_1 < M = m_2$:

The maximum charge in a room shall be in accordance with the following:

M_{max}= 2.5 x $(LFL)^{(5/4)}$ x h_0 x $(A)^{1/2}$ not to exceed M_{max}=SF x LFL x h_0 x A (GG.3DV)

The required minimum floor area A_{min} to installan appliance with refrigerant charge M(kg) shall be in accordance with following: A_{min}= (M/ (2.5 x $(LFL)^{(5/4)}$ x h_0))^2 not less than A_{min}= M/ (SF x LFL x h_0) (GG.4DV)

Refrigerant Charge and Room Area Limitations

In UL/CSA 60335-2-40,R32 refrigerant is classified as class A2L, which is mildly flammable.

Therefore, R32 refrigerant is suitable for systems needing additional refrigerant charge and which will limit the area of the rooms being served by the system.Similarly, the total amount of refrigerant in the system shall be less than or equal to the allowable maximum refrigerant charge. The allowable maximum refrigerant charge depends on the area of the rooms being served by the system.

NOTE:

The nouns in this section are explained as follows:

Mc: The actual refrigerant charge in the system.

A: The actual room area where the appliance is installed.

Amin: The required minimum room area.

Mmax: The allowable maximum refrigerant charge in a room.

Qmin: The minimum circulation airflow.

Anvmin: The minimum opening area for connected rooms.

The room area calculation requirements

CAUTION:

The space considered shall be any space which contains refrigerant-containing parts or into which refrigerant could be release.

The room area (A) of the smallest, enclosed. occupied space shall be used in the determination of the refrigerant quantity limits.

For determination of room area (A) when used to calculate the refrigerant charge limit, the following shall apply.

The room area (A) shall be defined as the room area enclosed by the projection to the base of the walls, partitions and doors of the space in which the appliance is installed.

Spaces connected by only drop ceilings,ductwork, or similar connections shall not be considered a single space.

Units mounted higher than 70-55/64 inches and spaces divided by partition walls that are no higher than62-63/64 inches shall be considered a single space.

Rooms on the same floor and conected by an open passageway between the spaces can be considered a single room when determining compliance to Amin, if the passageway complies with all of the following.

1. It is a permanent opening.
2. It extends to the floor.
3. It is intended for people to walk through.

The area of the connected rooms,on the same floor,connected by permanent opening in the walls and/ or doors between occupied spaces, including gaps between the wall and the floor can be considered a single room when determining compliance to Amin,provided all of the following conditions are met as fig. 2-1.

1. Low level opening

1) The opening shall not be less than Anvmin in Table2-1.
2) The area of any openings above 11-13/16 inches from the floor shall not be considered in determining compliance with Anvmin.
3) At least 50% of the opening area of Anvmin shall be below 7-7/8 inches from the floor.
4) The bottom of the opening is not more than 3-15/16 inches from the floor.
5) The opening is a permanent opening that cannot be closed.
6) For openings extending to the floor the height shall not be less than 25/32 inches above the surface of the floor covering.

2. High level opening

1) The opening shall not be less than 50% of Anvmin in Table2-1.
2) The opening is a permanent opening that cannot be closed.
3) The opening shall be at least 59 inches above the floor.
4) The height of the opening is not less than 25/32 inches.

NOTE:

The requirement for the second opening can be met by drop ceilings, ventillation ducts, or similar arrangements that provide an airflow path between the connected rooms.

The minimum opening for natural ventilation (Anvmin) in connected rooms is related to the room area (A). the actual refrigerant charge of refrigerant in the system (Mc), and the allowable MAXIMUM REFRIGERANT CHARGE in the system (Mmax),Anmin can be determined according to Table 2-1.

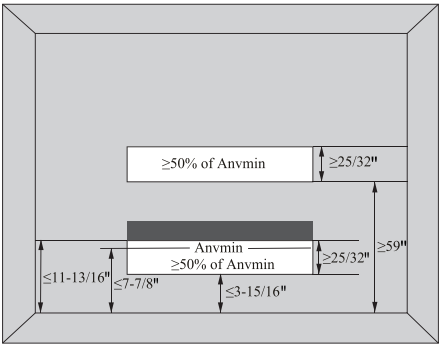

Fig.2-1 Opening Conditions for Connected Rooms

The minimum opening area for connected rooms. Note: Take the Mc=1.73kgs an example.

Table 2.1

A(m^2)	Mc(kg)	Mmax(kg)	Anvmin(m^2)
4	1.73	1.48	0.0058
7	1.73	2.59	0.0000
10	1.73	3.70	0.0000
15	1.73	5.55	0.0000
20	1.73	7.4	0.0000
30	1.73	11.1	0.0000

Table GG.1 - Maximum charge (kg)

Category	LFL (kg/m^3)	h_0(m)	Floor area (m^2)						
			4	7	10	15	20	30	50
R32	0.306	2.5	1.53	2.68	3.83	5.51	6.36	7.79	10.06
		2.8	1.71	3.00	4.28	6.17	7.12	8.73	11.27
		3	1.84	3.21	4.59	6.61	7.63	9.35	12.07

For R32 refrigerant charge amount and minimum room area:

The machine you purchased may be one of the types in the table below. The indoor and outdoor units are designed to be used together. Please check the machine you purchased. The indoor unit should be installed at least 8.2ft /2.5m above from the floor, and the minimum room area of operating or storage should be as specified in the following table:

Table GG.2 - Minimum room area (m^2)

Category	LFL (kg/m^3)	h_0(m)	Charge amount (M) (kg) Minimum room area (m^2)						
			0.58	0.60	1.00	1.07	1.20	1.58	2.00
R32	0.306	2.5	1.52	1.57	2.61	2.80	3.14	4.13	5.23
		2.8	1.35	1.40	2.33	2.50	2.80	3.69	4.67
		3	1.26	1.31	2.18	2.33	2.61	3.44	4.36

Refrigerant charging

Model	9K	12K	18K	24K	36K
R32(g)Standard	600	580	1070	1200	1580
R32(g)Max	675	655	1195	1325	1805

Caution: Risk of fire

Read operator's manual

Operating instructions

Caution: Risk of fire

Read technical manual

3. Information on servicing:

1) Checks to the area

Prior to beginning work on systems containing flammable refrigerants, safety checks are necessary to ensure that the risk of ignition is minimized. For repair to the refrigerating system,the following precautions shall be complied with prior to conducting work on the system.

2) Work procedure

Work shall be undertaken under a controlled procedure so as to minimize the risk of a flammable gas or vapor being present while the work is being performed.

3) General work area

All maintenance staff and others working in the local area shall be instructed on the nature of work being carried out. Work in confined spaces shall be avoided. The area around the workspace shall be sectioned off. Ensure that the conditions within the area have been made safe by control of flammable material

4) Checking for presence of refrigerant

The area shall be checked with an appropriate refrigerant detector prior to and during work, to ensure the technician is aware of potential flammable atmospheres. Ensure that the leak detection equipment being used is suitable for use with flammable refrigerants, i.e.non-sparking, adequately sealed or intrinsically safe.

5) Presence of fire extinguisher

If any hot work is to be conducted on the refrigeration equipment or any associated parts, appropriate fire extinguishing equipment shall be available to hand. Have a dry powder or CO_2 fire extinguisher adjacent to the charging area.

6) No ignition sources

No person carrying out work in relation to a refrigeration system which involves exposing any pipe work shall use any sources of ignition in such a manner that it may lead to the risk of fire or explosion. All possible ignition sources, including cigarette smoking, should be kept sufficiently far away from the site of installation, repairing, removing and disposal, during which refrigerant can possibly be released to the surrounding space. Prior to work taking place, the area around the equipment is to be surveyed to make sure that there are no flammable hazards or ignition risks. "No Smoking" signs shall be displayed.

7) Ventilated area

Ensure that the area is in the open or that it is adequately ventilated before breaking into the system or conducting any work that will produce heat. A degree of ventilation shall continue during the period that the work is carried out. The ventilation should safely disperse any released refrigerant and preferably expel it externally into the atmosphere.

8) Checks to the refrigeration equipment

Where electrical components are being changed, they shall be fit for the purpose and to the correct specification. At all times the manufacturer's maintenance and service guidelines shall be followed.

If in doubt consult the manufacturer's technical department for assistance.

The following checks shall be applied to installation using flammable refrigerant:

-- The charge size is in accordance with the room size within which the refrigerant containing parts are installed;

-- The ventilation machinery and outlets are operating adequately and are not obstructed;

-- If an indirect refrigerating circuit is being used, the secondary circuit shall be checked for the presence of refrigerant;

-- Marking to the equipment continues to be visible and legible. Markings and signs that are illegible shall be corrected;

-- Refrigeration pipe or components are installed in a position where they are unlikely to be exposed to any substance which may corrode refrigerant containing components, unless the components are constructed of materials which are inherently resistant to being corroded or are suitably protected against being so corroded.

9) Checks to electrical devices

Repair and maintenance to electrical components shall include initial safety checks and component inspection procedures. If a fault exists that could compromise safety, then no electrical supply shall be connected to the circuit until it is satisfactorily dealt with. If the fault cannot be corrected immediately but it is necessary to continue operation, an adequate temporary solution shall be used. This shall be reported to the owner of the equipment so all parties are advised.

Initial safety checks shall include:

-- That capacitors are discharged: this shall be done in a safe manner to avoid possibility of sparking;

-- That no live electrical components and wiring are exposed while charging, recovering or purging the system;

-- That there is continuity of earth bonding.

4. Repairs to sealed components

Sealed electrical components shall be replaced.

5. Repair to intrinsically safe components

Intrinsically safe components must be replaced.

6. Cabling

Check that cabling will not be subject to wear, corrosion, excessive pressure, vibration, sharp edges or any other adverse environmental effects. The check shall also take into account the effects of aging or continual vibration from sources such as compressors or fans.

7. Detection of flammable refrigerants

Under no circumstances shall potential sources of ignition be used in the searching for or detection of refrigerant leaks. A halide torch (or any other detector using a naked flame) shall not be used.

8. Leak detection methods

The following leak detection methods are deemed acceptable for systems containing flammable refrigerants.

Electronic leak detectors shall be used to detect flammable refrigerants, but the sensitivity may not be adequate, or may need re-calibration. (Detection equipment shall be calibrated in a refrigerant-free area.) Ensure that the detector is not a potential source of ignition and is suitable for the refrigerant used. Leak detection equipment shall be set at a percentage of the LFL of the refrigerant and shall be calibrated to the refrigerant employed and the appropriate percentage of gas (25 % maximum) is confirmed. Leak detection fluids are suitable for use with most refrigerants but the use of detergents containing chlorine shall be avoided as the chlorine may react with the refrigerant and corrode the copper pipe-work. If a leak is suspected, all naked flames shall be removed/ extinguished. If a leakage of refrigerant is found which requires brazing, all of the refrigerant shall be recovered from the system, or isolated (by means of shut off valves) in a part of the system remote from the leak. Oxygen free nitrogen (OFN) shall then be purged through the system both before and during the brazing process.

9. Removal and evacuation

When breaking into the refrigerant circuit to make repairs or for any other purpose conventional procedures shall be used. However, it is important that best practice is followed since inflammability is a consideration. The following procedure shall be adhered to:

-- Remove refrigerant;

-- Purge the circuit with inert gas;

-- Evacuate;

-- Purge again with inert gas;

-- Open the circuit by cutting or brazing.

The refrigerant charge shall be recovered into the correct recovery cylinders. The system shall be flushed with OFN to render the unit safe. This process may need to be repeated several times.

Compressed air or oxygen shall not be used for this task.

Flushing shall be achieved by breaking the vacuum in the system with OFN and continuing to fill until the working pressure is achieved, then venting to atmosphere, and finally pulling down to a vacuum. This process shall be repeated until no refrigerant is within the system. When the final OFN charge is used, the system shall be vented down to atmospheric pressure to enable work to take place. This operation is absolutely vital if brazing operations on the pipe-work are to take place.

Ensure that the outlet for the vacuum pump is not close to any ignition sources and there is ventilation available.

10. Decommissioning

Before carrying out this procedure, it is essential that the technician is completely familiar with the equipment and all its detail. It is recommended good practice that all refrigerants are recovered safely. Prior to the task being carried out, an oil and refrigerant sample shall be taken in case analysis is required prior to re-use of reclaimed refrigerant. It is essential that electrical power is available before the task is commenced.

1) Become familiar with the equipment and its operation.

2) Isolate system electrically.

3) Before attempting the procedure,ensure that:

- mechanical handling equipment is available,if required,for handling refrigerant cylinders;
- all personal protective equipment is available and being used correctly;
- the recovery process is supervised at all times by a competent person;
- recovery equipment and cylinders conform to the appropriate standards.

4) Pump down refrigerant system,if possible.

5) If a vacuum is not possible,make a manifold so that refrigerant can be removed from various parts of the system.

6) Make sure that cylinder is situated on the scales before recovery takes place.

7) Start the recovery machine and operate in accordance with manufacturer's instructions.

8) Do not overfill cylinders.(No more than 80% volume liquid charge).

9) Do not exceed the maximum working pressure of the cylinder,even temporarily.

10) When the cylinders have been filled correctly and the process completed,make sure that the

cylinders and the equipment are removed from site promptly and all isolation valves on the equipment are closed off.

11) Recovered refrigerant shall not be charged into another refrigeration system unless it has been cleaned and checked.

11. Labeling

Equipment shall be labled stating that it has been de-commissioned and emptied of refrigerant. The label shall be dated and signed. Ensure that there are labels on the equipment stating the equipment contains flammable refrigerant.

12. Recovery

When removing refrigerant from a system,either for servicing or decommissioning, it is recommended good practice that all refrigerants are removed safely.

When transferring refrigerant into cylinders,ensure that only appropriate refrigerant recovery cylinders are employed.Ensure that the correct number of cylinders for holding the total system charge are available.All cylinders to be used are designated for the recovered refrigerant and labled for that refrigerant(i.e.Special cylinders for the recovery of refrigerant).Cylinders shall be complete with pressure-relief valve and associated shut-off valves in good working order.

Empty recovery cylinders are evacuated and,if possible,cooled before recovery occurs.

The recovery equipment shall be in good working order with a set of instructions concerning the equipment that is at hand and shall be suitable for the recovery of all appriate refrigerants includeing,when applicable,flammable refrigerants.In addition,a set of calibrated weighing scales shall be available and in good working order.Hoses shall be complete with leak-free disconnect couplings and in good condition.Before using the recovery machine,check that it is in satisfactory working order,has been properly maintained and that any associated electrical components are sealed to prevent ignition in the event of a refrigerant release.Consult manufacturer if in doubt.

The recovered refrigerant shall be returned to the refrigerant supplier in the correct recover cylinder,and the relevant waste transfer note arranged.Do not mix refrigerants in recovery units and especiallly not in cylinders.

If compressors or compressor oils are to be removed,ensure that they have been evacuated to an acceptable level to make certain that flammable refrigerant does not remain within the lubricant.

The evacuation process shall be carried out prior to returning the compressor to the suppliers.

Only electric heating to the compressor body shall be employed to accelerate this process.When oil is drained from a system,it shall be carried out safely.

13. Warning:

1) Do not use means to accelerate the defrosting process or to clean, other than those recommended by the manufacturer;

1) Ne pas utiliser de produits permettant d'accélérer le dégel ou de produits de nettoyage autres que ceux recommandés par le fabricant.

2) The appliance shall be stored in a room without continuously operating ignition sources (for example: open flames, an operating gas appliance or an operating electric heater.

2) L'appareil doit être entreposé dans un endroit sans source d'allumage fonctionnant en continu (par exemple: flamme nue, appareil au gaz en marche ou radiateur électrique en marche).

3) Do not pierce or burn.

3) Ne pas percer ni brûler.

4) Be aware that refrigerants may not contain an odour.

4) Attention : les frigorigènes peuvent être inodores.

14. Statement

1) Please use the flammable gas detector to check before unload and open the container.

2) No fire source and smoking.

3) That pipe work shall be protected from physical damage and, in the case of FLAMMABLE REFRIGERANTS, shall not be installed in an unventilated space, if that space is smaller than Amin in Annex GG, except for A2L REFRIGERANTS where the installed pipes comply with UL 60335-2-40 Clause. In case of field charge, the effect on REFRIGERANT CHARGE caused by the different pipe length has to be quantified;

4) That compliance with national gas regulations shall be observed;

5) Be shipped with a FLAMMABLE REFRIGERANT CHARGE. Joints made in the installation between parts of the REFRIGERATING SYSTEM, with at least one part charged, shall be made in accordance with the following.

- A brazed, welded, or mechanical connection shall be made before opening the valves to permit refrigerant to flow between the REFRIGERATING SYSTEM parts. A vacuum valve shall be provided to evacuate the interconnecting pipe and/or any uncharged REFRIGERATING SYSTEM part.
- Mechanical connectors used indoors shall comply with ISO 14903. When mechanical connectors are reused indoors, sealing parts shall be renewed. When flared joints are reused indoors, the flare part shall be re-fabricated.
- Refrigerant tubing shall be protected or enclosed to avoid damage.
- Flexible refrigerant connectors (such as connecting lines between the indoor and outdoor unit) that may be displaced during NORMAL OPERATION shall be protected against mechanical damage.

6) That pipe work including piping material, pipe routing, and installation shall include protection from physical damage in operation and service, and be in compliance with national and local codes

and standards, such as ASHRAE 15, ASHRAE 15.2, IAPMO Uniform Mechanical Code, ICC International Mechanical Code, or CSA B52. All field joints shall be accessible for inspection prior to being covered or enclosed;

7) That after completion of field piping for split systems, the field pipe work shall be pressure tested with an inert gas and then vacuum tested prior to refrigerant charging, according to the following requirements;

8) The appliance shall be stored so as to preven mechanical damage from occurring.

9) Working personnel for maintenance, service and repair operations. Every working procedure that affects safety means shall only be carried out by competent persons according to Annex HH. Examples for such working procedures are:

- breaking into the refrigerating circuit;
- opening of sealed components;
- opening of ventilated enclosures.

Installation Safety Principles

1. Site Safety

Open Flames Prohibited

Ventilation Necessary

Operation Safety

Mind Static Electricity

Must wear protective clothing and anti-staticgloves

Don`t use mobile phone

2. Installation Safety

- Refrigerant Leak Detector
- Appropriate Installation Location

The left picture is the schematic diagram of a refrigerant leak detector.

Please note that:

1) The installation site should be well-ventilated.
2) The sites for installing and maintaining an air conditioner using Refrigerant R32 should be free from open fire or welding, smoking, drying oven or any other heat source higher than 548°C which easily produces open fire.
3) When installing an air conditioner, it is necessary to take appropriate anti-static measures such as wear anti-static clothing and/or gloves.
4) It is necessary to choose the site convenient for installation or maintenance wherein the air inlets and outlets of the indoor and outdoor units should be not surrounded by obstacles or close to any heat source or combustible and/or explosive environment.
5) If the indoor unit suffers refrigerant leak during the installation, it is necessary to immediately turn off the valve of the outdoor unit and all the personnel should go out till the refrigerant leaks completely for 15 minutes. If the product is damaged, it is a must to carry such damaged product back to the maintenance station and it is prohibited to weld the refrigerant pipe or conduct other operations on the user's site.
6) It is necessary to avoid the places where there are other electrical products, power switch plugs and sockets, kitchen cabinet, bed, sofa and other valuables right under the lines on two sides of the indoor unit.

Suggested Tools

Tool	Picture	Tool	Picture	Tool	Picture
Standard Wrench		Pipe Cutter		Vacuum Pump	
Adjustable/ Crescent Wrench		Screw drivers (Phillips & Flat blade)		Safety Glasses	
Torque Wrench		Manifold and Gauges		Work Gloves	
Hex Keys or Allen Wrenches		Level	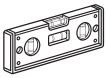	Refrigerant Scale	
Drill & Drill Bits		Flaring tool		Micron Gauge	
Hole Saw		Clamp on Amp Meter		Welding Gun	

Operating condition

Inverter air conditioner:

HEATING	Room temperature 0°C~27°C(32°F~81°F)
	Outdoor temperature -20°C~24°C(-4°F~75°F)
COOLING/ DRY	Room temperature 17°C~32°C(63°F~90°F)
	Outdoor temperature T1 climate: -15°C~53°C(5°F~127°F)

With the power supply connected, restart the air conditioner after shutdown, or switch it to other mode during operation, and the air conditioner protection device will start. The compressor will resume operation after 3 minutes.

Noise pollution

- Install the air conditioner in a place that can bear its weight in order to operate more quietly.
- Install the outdoor unit in a place where the air discharged and the operation noise do not annoy your neighbors.
- Do not place any obstacles in front of the outlet of the outdoor unit for fear it affects operation and increases the noise level.

Features of Protector

1. The protective device will trip at following cases.
   - Stop the appliance and restart it at once or change other modes during operation, you have to wait 3 minutes before restarting.
   - After switching on the power circuit breaker and then turn on the air conditioner at once, you have to wait about 20 seconds.
2. In case all operations have stopped, you need.
   - Press "ON/OFF" button again to restart it.
   - Set TIMER once again if it has been canceled.

Inspection

After a long time of operation, the air conditioner should be inspected for the following items.

- Abnormal heating of the power supply cord or even a burnt smell.
- Abnormal operating noise or vibration.
- Water leakage from indoor unit.
- Metal cabinet electrified.
- Stop using the air conditioner if above problem happened.
- It is advisable that the air conditioner should be given a detail check-up after using for five years even if none of the above happen.

Features of HEATING mode

Preheat

2-5 minutes are necessary to preheat the indoor heat exchanger at the beginning of "HEATING" operation, lest cold air be discharged.

Defrost

In "HEATING" operation the appliance will defrost automatically. This procedure lasts 2~10 minutes, then returns to "HEATING" mode automatically. During defrosting, indoor fan stop running and return to heating mode operation automatically when defrosting has finished.

Names of Parts

Indoor Unit

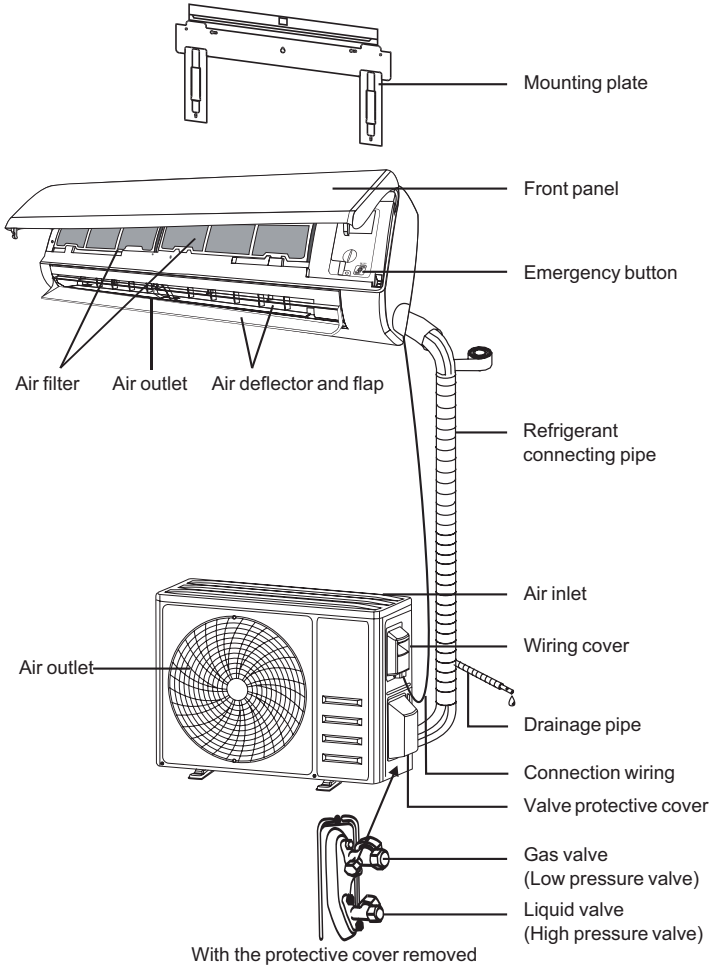

Outdoor Unit

Requirements

- When the air temperature is below -15°C, the air conditioner cannot be started up until it is powered on for 2 hours.Furthermore, in case of a shutdown lasting for about one diel only, please do not cut off the electricity supply.
- Notice that the air inlet/outlet must not be choked up. If chokeup takes place, the air conditioner behavior may be affected, or air conditioner cannot run because of actuation of protector.

Please check whether the following list of accessories are of full scope. If there are some spare items, please store them carefully aside.

Note: This figure shown may be different from the actual object. Please take the latter as the standard.

Packing list:

Serial number	Name	Quantity	Sketch map
1	Remote control unit	×1	
2	Battery	×2	
3	Drain pipe assembly (some models)	×1	
4	Copper nut	2~4 (Depending on models)	
5	Instruction book	1~2 (Depending on models)	
6	Mounting plate + Cardboard template	1+1	
7	Anchor	6~8 (Depending on models)	
8	Tapping screw	6~8 (Depending on models)	
9	Mounting foot pads for the outdoor unit (some models)	x2	
10	Connecting pipe (some models)	x1	
11	Connetting wire (some models)	x1	
12	Wall sleeve(some models)	x1	
13	Insulation pipe(some models)	x1	
14	Pipe tape(some models)	×1	
15	Wall sleeve cover(some models)	x1	
16	Sealant(some models)	x2	

Display Panel

Infrared signal receiver : receive of signal from the remote controller.

To make your remote controller operation more efficient, please let remote controller emitt or aim at infrared signal receiver.

Buzzer: firstly power supplied or any of remote controller operations will make the buzzer sound once.

Some obstacles occuring in the system will be recognized by intelligent recognition system of unit, lighting on the DISPLAY PANEL flashing show the type of obstacles.

DISPLAY PANEL

No.	Led	Function
1	88	Indicator for Timer, temperature and Error codes.
2		Lights up during Timer operation.
3		SLEEP mode

⚠ The shape and position of switches and indicators may be different according to the model, but their function is the same.

Indoor Unit Installation

Please select the space to install indoor unit according to the dimension show above, then install correctly, and have enough space for maintenance.

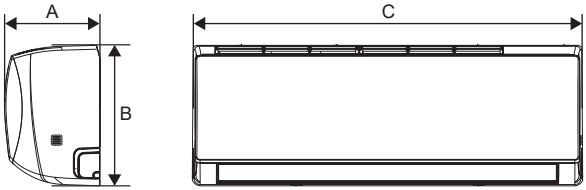

Model	Indoor unit		
	A	B	C
9-12K	198	292	807
18K	206	292	906
24K	220	315	1010
36K	258	360	1191

Step1: Select Installation location

1) Ensure the installation complies with the installation minimum dimensions (defined below) and meets the minimum and maximum connecting piping length and maximum change in elevation as defined in the System Requirements section.
2) Air inlet and outlet will be clear of obstructions, ensuring proper airflow throughout the room.
3) Condensate can be easily and safely drained.
4) All connections can be easily made to outdoor unit.
5) Indoor unit is out of reach of children.
6) A mounting wall strong enough to withstand four times the full weight and vibration of the unit.
7) Filter can be easily accessed for cleaning.
8) Leave enough free space to allow access for routine maintenance.
9) Install at least 10 ft. (3m) away from the antenna of TV set or radio. Operation of the air conditioner may interfere with radio or TV reception in areas where reception is weak. An amplifier may be required for the affected device.
10) Do not install in a laundry room or by a swimming pool due to the corrosive environment.
11) For ETL certification area, Caution: Mount with the lowest moving parts at least 8 ft. (2.4 m) above floor or grade level.

Minimum Indoor Clearances

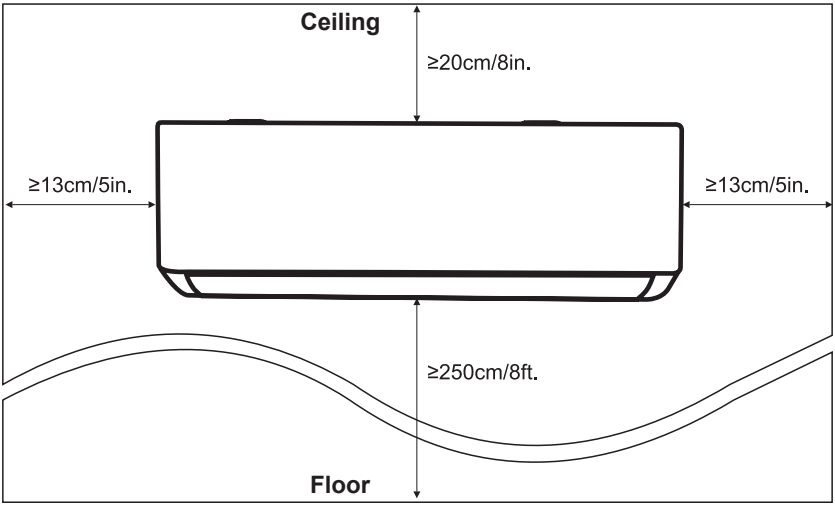

Step2: Install Mounting Plate

1) Take the mounting plate from the back of indoor unit.
2) Ensure to meet the minimum installation dimension requirements as step 1, according to the size of mounting plate, determine the position and stick the mounting plate close to the wall.
3) Adjust the mounting plate to a horizontal state with a spirit level, then mark out the screw hole positions on the wall.
4) Put down the mounting plate and drill holes in the marked positions with drill.
5) Insert expansion rubber plugs into the holes, then hang the mounting plate and fix it with screws.

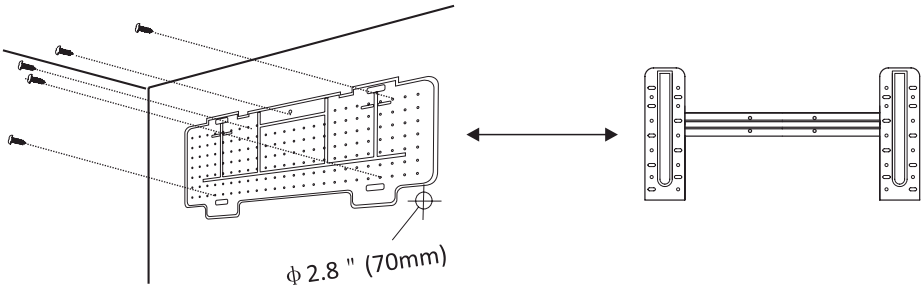

Note:

1. Make sure the mounting plate is firm enough and flat against the wall after installation.
2. This figure shown may be different from the actual object, please take the latter as the standard.

Step3: Drill Wall Hole

A hole in the wall should be drilled for refrigerant piping ,the drainage pipe, and connecting cables.

1) Determine the location of wall hole base on the position of mounting plate.

2) The hole should be have a 70mm diameter at least and a small oblique angle to facilitate drainage.

3) Drill the wall hole with 70mm core drill and with small oblique angle lower than the indoor end about 5mm to 10mm.

4) Place the wall sleeve and wall sleeve cover(both are optional parts) to protect the connection parts.

Caution:

When drill the wall hole, maker sure to avoid wires, plumbing and other sensitive components.

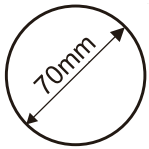

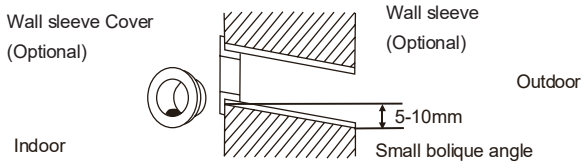

Step4: Connecting Refrigerant Pipe

1) According to the wall hole position, select the appropriate piping mode. There are three optional piping modes for indoor units as shown in the figure below:In Piping Mode 1 or Piping Mode 3, a notch should be made by using scissors to cut the plastic sheet of piping outlet and cable outlet on the corresponding side of the indoor unit.

Note: When cutting off the plastic sheet at the outlet, the cut should be trimmed to smooth.

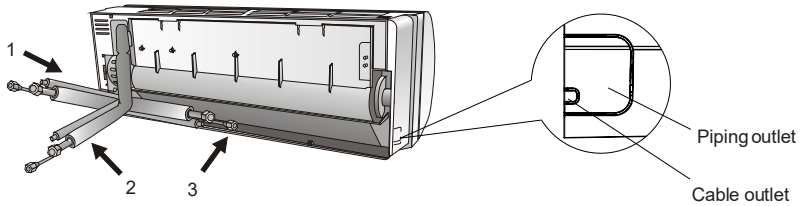

2) Bending the connecting pipes with the port facing up as shown in the figure.

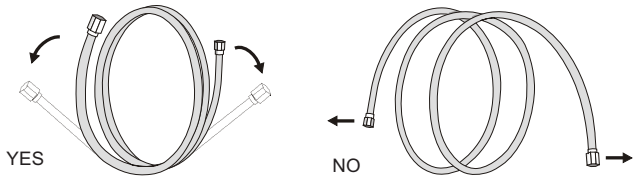

3) Take off the plastic cover in the pipe ports and take off the protective cover on the end of piping connectors.

4) Check whether there is any sundry on the port of the connecting pipe and make ensure the port is clean.

5) After align the center, rotate the nut of the connecting pipe to tighten the nut as tightly as possible by hand.

6) Use a torque wrench to tighten it according to the torque values in the torque requirements table;(Refer to the torque requirements table on section Instruction for Servicing)

7) Wrap the joint with the insulation pipe.

Note: For R32 refrigerant, the connectors should be placed outdoor.

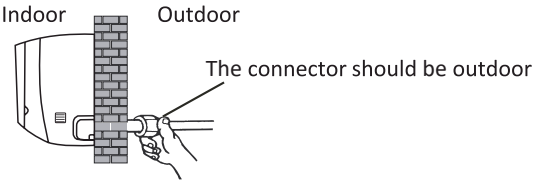

Step5: Connect Drainage Hose

1) Adjust the drainage hose(if applicable)

In some model, both sides of the indoor unit are provided with drainage ports, you can choose one of them to attache the drainage hose. And block the unused drain port with the rubber attached in one of the ports.

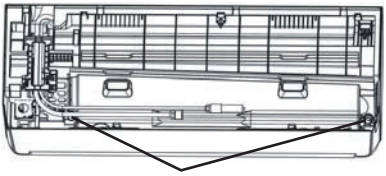

2) Connect the drainage hose to the drainage port, ensure the joint is firm and the sealing effect is good.

3) Wrap the joint firmly with teflon tape to ensure no leaks.

Note: Make sure there is no twists or dents, and the pipes should be placed obliquely downward to avoid blockage, to ensure proper drainage.

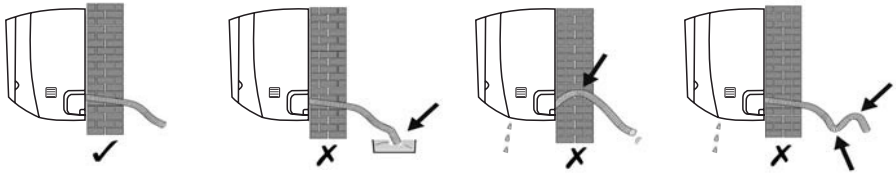

Step6: Connect Wiring

1) Choose the right cables size determined by the maximum operating current on the nameplate. (Check the cables size refer to section **INSTALLATION PRECAUTIONS**)
2) Open the front panel of indoor unit.
3) Use a screwdriver, open the electric control box cover, to reveal the terminal block.
4) Unscrew the cable clamp.
5) Insert one end of the cable into the position of control box from the back of the right end of the indoor unit.
6) Connect the wires to corresponding terminal according to the wiring diagram on the electric control box cover. And make sure that they are well connected.
7) Screw the cable clamp to fasten the cables.
8) Reinstall the electric control box cover and front panel.

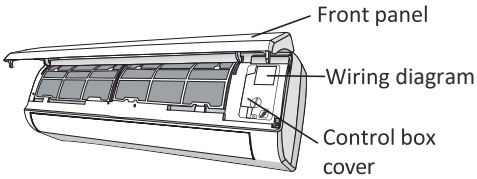

Step7: Wrap Piping and Cable

After the refrigerant pipes, connecting wires and drainage hose are all installed, in order to save space, protect and insulate them, it must be bundle with insulating tape before passing them through the wall hole.

1) Arrange the pipes ,cables and drainage hose well as the following picture.

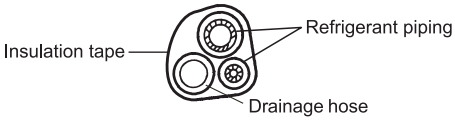

Note: (I) Make sure the drainage hose is at the bottom.

(II) Avoid crossing and bending of parts.

2) Using the insulating tape wrap the refrigerant pipes, connecting wires and drainage hose together tightly.

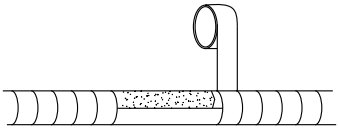

Step8: Mount Indoor Unit

1. Slowly pass the refrigerant pipes, connecting wires and drainage hose wrapped bundle through the wall hole.
2. Hook the top of indoor unit on the mounting plate.
3. Apply slight pressure to the left and right sides of the indoor unit, make sure the indoor unit is hooked firmly.
4. Push down the bottom of indoor unit to let the snaps onto the hooks of the mounting plate, and make sure it is hooked firmly.

Sometimes, if the refrigerant pipes were already embedded in the wall, or if you want to connect the pipes and wires on the wall, do as below:

1) Hook the top of the indoor unit on the mounting plate without piping and wiring.
2) Lift the indoor unit opposite the wall, unfold the bracket on the mounting plate, and use this bracket to prop up the indoor unit, there will be a big space for operation.
3) Do the refrigerant piping, wiring, connect drainage hose, and wrap them as **Step 4 to 7**.

Outdoor Unit Installation

Split type outdoor unit

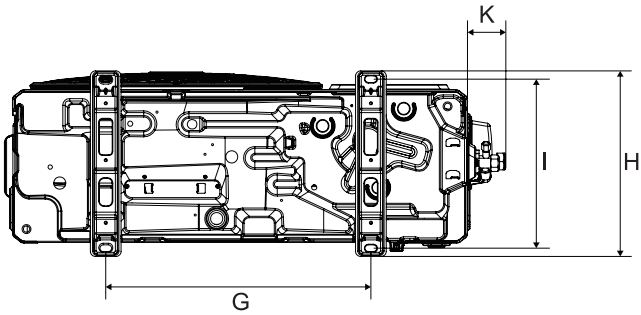

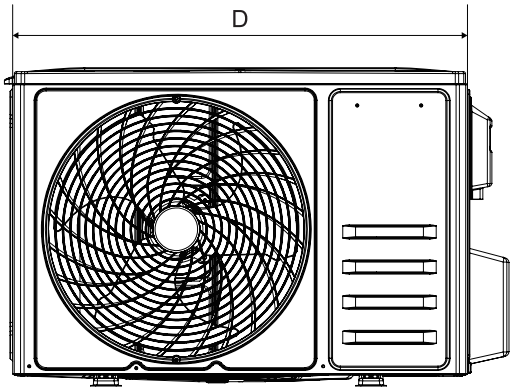

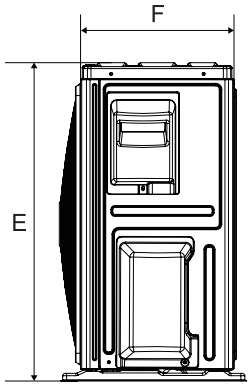

Unit：mm

Model	Outdoor unit						
	D	E	F	G	H	I	K
9K	716	498	240	415	290	263	59
12K	732	551	257	434	305	305	59
18K	780	602	292	516	349	314	58
24K	856	700	330	586	375	348	48
36K	914	804	364	607	421	390	60

Move outdoor unit (Mainly for high-rise applications and large/heavy models)

1. Please use 4 pieces of 6mm steel wire to lift the outdoor unit and move it to the desired location.
2. To prevent the outdoor unit from being deformed, please add baffles on the surface of the outdoor unit where the steel wires may come into contact.
3. After moving, please remove the wooden tray from the bottom.

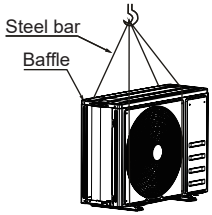

INSTALLATION SPACE

1. After leaving repair space as illustrated below, install the outdoor unit with power supply equipment installed at the side of the outdoor unit. Please refer to ELECTRIC SUPPLY INSTALLATION MANUAL for the installation method.
2. Please make sure necessary space for installation and repair.

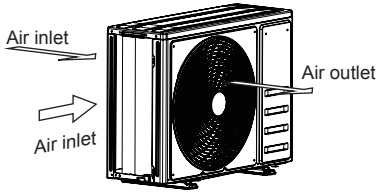

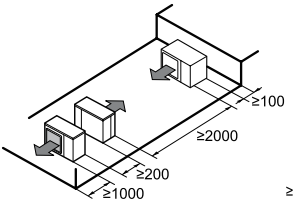

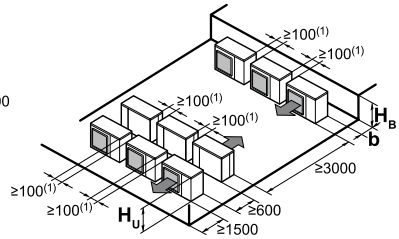

H_B H_U	b (mm)
$H_B \leq ½H_U$	b≥250
$½H_U < H_B \leq H_U$	b≥300
$H_B > H_U$	/

Refrigerant pipes

1. The junction is inside the cover of the right panel. Please remove the cover first.
2. Route the pipe through the side gap of the cover.
3. After connecting via the valve opening, reinstall the cover from the left, right, or back for installation.
4. The diagram on the right is the schematic diagram of the outdoor unit's valve installation panel. The gas side (low-pressure side) is oriented upward, and the liquid side is oriented downward.

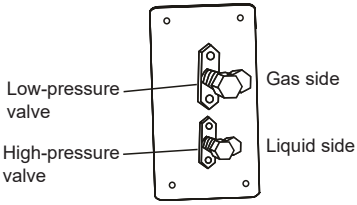

INSTALLATION

Pre-installation precautions

- Please confirm that the installation personnel are qualified for relevant installation work. If the air conditioner is installed by persons without special skills, normal operations will not be ensured, and even personal and property safety will be affected.

User guideline

- The user's installation site should be provided with a regular power supply conforming to that indicated on the air conditioner's nameplate, and its voltage should be within the range of 90% - 110% of the rated voltage value.
- The power circuit should be equipped with a protective device, such as a leakage protector or an air switch, which should have a capacity greater than 1.5 times the maximum current value of the air conditioner.
- Always use a dedicated circuit and a properly-grounded socket compatible with the air conditioner's power terminal. The power terminal is equipped with a grounding pin, and it must not be modified at will.
- Please use the fuse or circuit breaker prescribed in the Installation Instructions.
- Only a qualified electrician is allowed to carry out wiring tasks strictly according to electrical safety requirements.
- Do ensure proper grounding of the air conditioner; in other words, the main power switch of the air conditioner must be connected to a reliable ground wire.

Precautions

- The air conditioner should be installed securely; otherwise poor installation may lead to abnormal noise and vibration.
- Outdoor unit should be installed at a spot ensuring that its air outlet noises and hot exhaust will not violate your neighbors.

Unit body installation

1. Mark the installation position for expansion bolts according to the outdoor unit's installation dimensions.
2. Drill holes, clean the concrete dust, and insert the expansion bolts.
3. If applicable, install 4 rubber pads on the installation holes before placing the outdoor unit (Optional).
4. Doing so will reduce vibrations and noise.
5. Place the outdoor unit onto the bolts and pre-drilled holes.
6. Use a wrench to firmly secure the outdoor unit with the bolts.

Note:

The outdoor unit can be fixed on a wall-mounting bracket.

Follow the wall-mounting bracket's instructions to attach the bracket to the wall. Then, fasten the outdoor unit to the bracket and ensure it is level.

The wall-mounting bracket must support at least 4 times the weight of the outdoor unit.

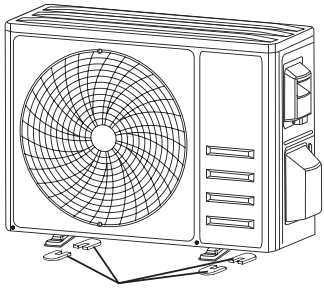

Install 4 rubber blankets (Optional)

Install Drainage Hose

1. This step only for heat pump models or RCACs.
2. Insert the drainage joint to the hole at the bottom of the outdoor unit.
3. Connect the drainage hose to the joint and make the connection well enough.

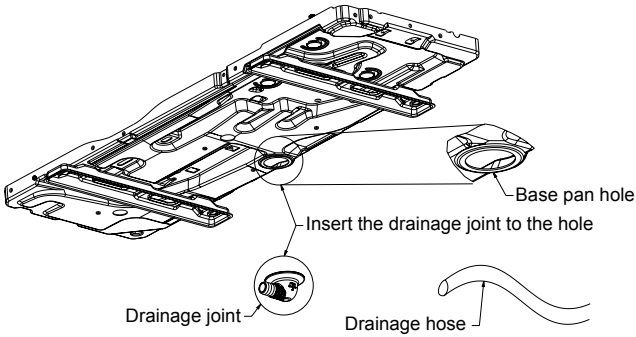

NOTE:

Before bolting the outdoor unit in place, you must install the drain joint at the bottom of the unit. For units with a base pan built-in (with multiple holes for proper draining during defrost), the drain joint is not needed to be installed.

In cold climates, ensure the drain hose is as vertical as possible to ensure swift water drainage. If water drains too slowly it can freeze in the hose and flood the unit.

Refrigerant Pipes Installation

Pipe dimension and ways of installation

Outdoor pipe dimension and ways of install (in sequence of cooling capacity)

Pipe Material		Copper Pipe for Air Conditioner		
Model		9~18K	24K	36K
Size(mm)	Liquid side	Φ6.35 (1/4inch)	Φ6.35 (1/4inch)	Φ6.35 (1/4inch)
	Gas side	Φ9.52(3/8inch)	Φ12.7(1/2inch)	Φ15.88(5/8inch)

Conventional pipe		9/12K	18/24K	36K
Maxium pipe length (liquid side) L		15m	20m	30m
Maximum Height drop	Height drop between indoor and outdoor unit H	10m	15m	20m

Please refer to refrigerant pipe connection for detail

Allowed length and height drop

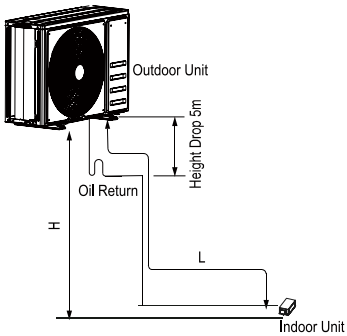

Remove objects and water

- Use high-pressure nitrogen to clean the pipe instead of using outdoor refrigerant for this cleaning process.
- Before installing the refrigerant pipe, please clean the pipe to prevent foreign objects from being inside.

Additional refrigerant charge

- The additional charge is based on the diameter and length of the outlet and inlet liquid pipes.
- This AC has been charged with a standard amount of refrigerant for 7.5m connection pipes. Connection pipes beyond 7.5m should be additionally charged as follows.

Inverter Models Capacity (Btu/h)	9K/12K	18K/24K	36K
Length of pipe with standard charge	7.5m/25ft	7.5m/25ft	7.5m/25ft
Maximum distance between indoor and outdoor unit	15m/49ft	20m/65ft	30m/98ft
Additional refrigerant charge	10g/m	10g/m	10g/m
Max. diff. in level between indoor and outdoor unit	10m/33ft	15m/49ft	20m/65ft
Type of refrigerant	R32		

Refrigerant charge label

Please fill in with indelible ink.

- ① The factory refrigerant charge of the product
- ② The additional refrigerant amount charged in the field and refer to the step 4 on section Indoor Unit Installation.
- ① + ② the total refrigerant charge on the refrigerant charge label supplied with the product.

Affix the refrigerant charge label near the manufacturer's label after filling it out.

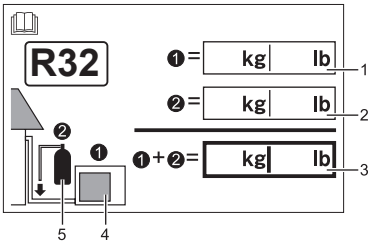

1. Factory refrigerant charge of the product: see unit manufacturer's label.
2. Additional refrigerant amount charged in the field.
3. Total refrigerant charge.
4. Outdoor unit.
5. Refrigerant cylinder and manifold for charging.

Non-return bend and oil return bend

1) Outdoor unit is beneath the indoor unit.

There's no need to add non-return bend at the lowest or highest position of the vertical pipe, as shown below:

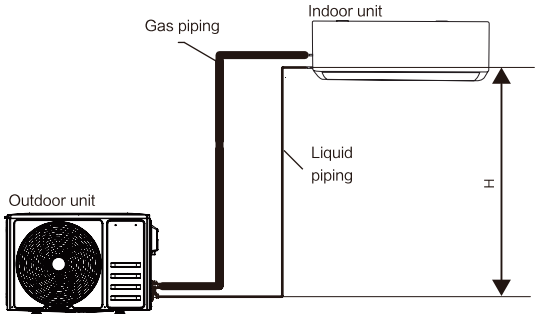

2) Outdoor unit is above the indoor unit.

It's necessary to add oil return bend and non-return bend at the lowest and highest position of the vertical pipe, as shown below:

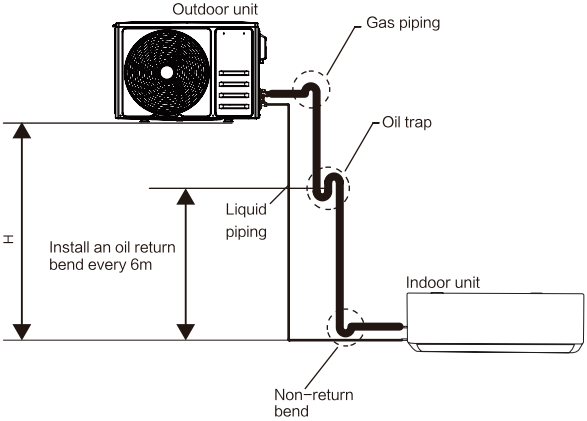

Dimensions for the making of oil return bend are as follows:

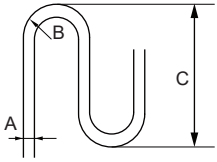

A(inch)	B(mm)	C(mm)
Φ3/8	≥20	≤150
Φ1/2	≥26	≤150
Φ5/8	≥33	≤150

FLARING

1. Cut the refrigerant pipe off with a pipe cutter.

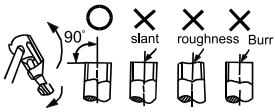

2. Flare the pipe after putting it into the connection nut.

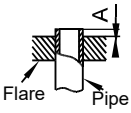

Outside Diameter	A(mm)	
	MAX	MIN
Φ1/4"	8.7	8.3
Φ3/8"	12.4	12.0
Φ1/2"	15.8	15.4
Φ5/8"	19.0	18.6
Φ3/4"	23.3	22.9

Stop valve operation item

- Open the valve rod until it reaches the stop position. Do not attempt to open it further.
- Fasten the valve bonnet with a spanner or other similar tools.
- Ensure the valve rod bonnet is securely fastened.

Junction Fixture

Aim at the connection pipe, fix the nut of the connection pipe, and then tighten it with a spanner as shown in the following diagram.

⚠Notice

According to the installation conditions, an excessively large tightening torque will damage the nut.

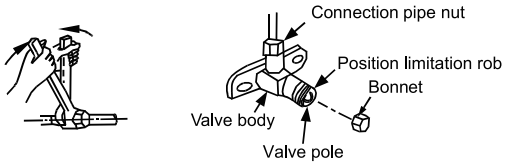

Pipe Size	Newton meter(N x m)	Pound-force foot(lbf-ft)	Kilogram-force meter(kgf-m)
1/4" (φ6.35)	15-20	11.1-14.8	1.5-2.0
3/8"(φ9.52)	31-35	22.9-25.8	3.2-3.6
1/2"(φ12)	45-50	33.2-36.9	4.6-5.1
5/8"(φ15.88)	60-65	44.3-48.0	6.1-6.6

⚠ Note: This table is only for reference, the installation shall meet the requirements of local laws and regulations.

- The following figure only shows the assembly relationship of the indoor unit ,outdoor unit and refrigerant pipes.
- Please refer to the following figures to install.

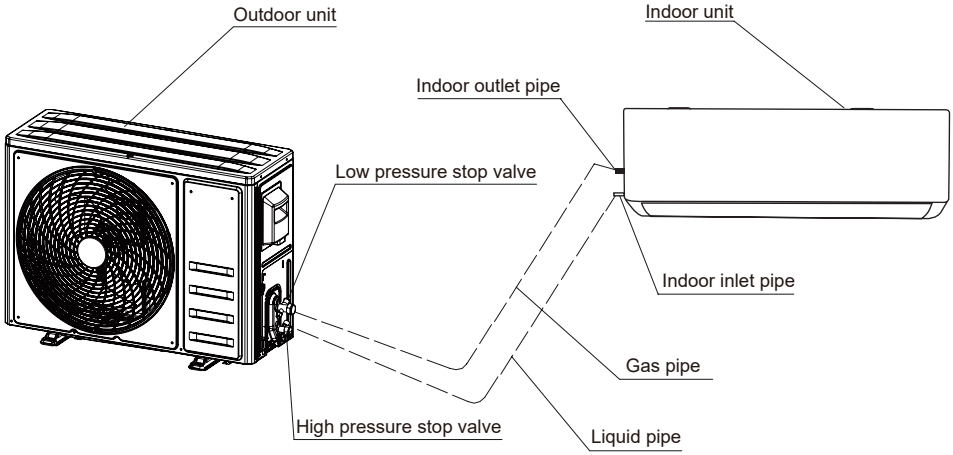

NOTE

- The throttle subassembly has been installed in the outdoor unit.
- Use two spanners to connect the pipe with indoor/outdoor pipes to avoid the copper pipe cracking.
- Please pay attention to the connection orientation when connecting.

Joints shall be tested with detection equipment with a capability of 5g/year of refrigerant or better, with the equipment in standstill and under operation or under a pressure of at least these standstill or operation conditions.

Electric Wiring

CAUTION

- Be sure to Install Current Leakage Protection Switch.
- Or electric shock may occur.
- The appliance must be positioned so that the power terminal is accessible.
- The appliance shall be installed in accordance with national wiring regulations.

1. Power cord is to be selected according to national regulations.
2. Outdoor unit power cord should be selected and connected according to the outdoor unit installation manual.
3. Wiring should be away from high temperature components, or the insulation layer of the wires may melt down.
4. Use wire clamp to fix the wires and terminal block after connection.
5. Control wire should be wrapped together with heat insulated refrigerant pipes.
6. Connect the indoor unit to power only after the refrigerant has been vacuumed.
7. Don’t connect the power wire to the signal wire connection end.

Install Wiring

1. Use a phillips screwdriver to unscrew wiring cover, grasp and press it down gently to take it down.
2. Unscrew the cable clamp and take it down.
3. According to the wiring diagram pasted inside the wiring cover, connect the connecting wires to the corresponding terminals, and ensure all connections are firmly and securely.
4. Reinstall the cable clamp and wiring cover.

Note: When connecting the wires of indoor and outdoor units, the power should be cut off.

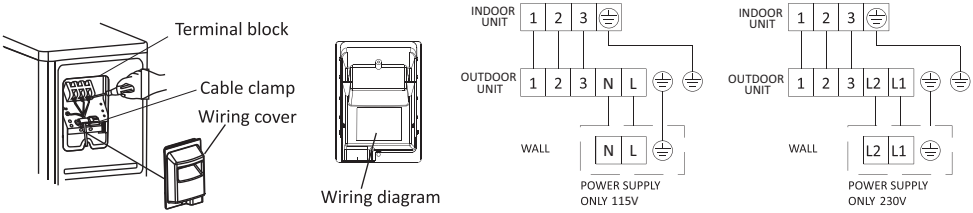

External wiring diagrams

(9K-24K)

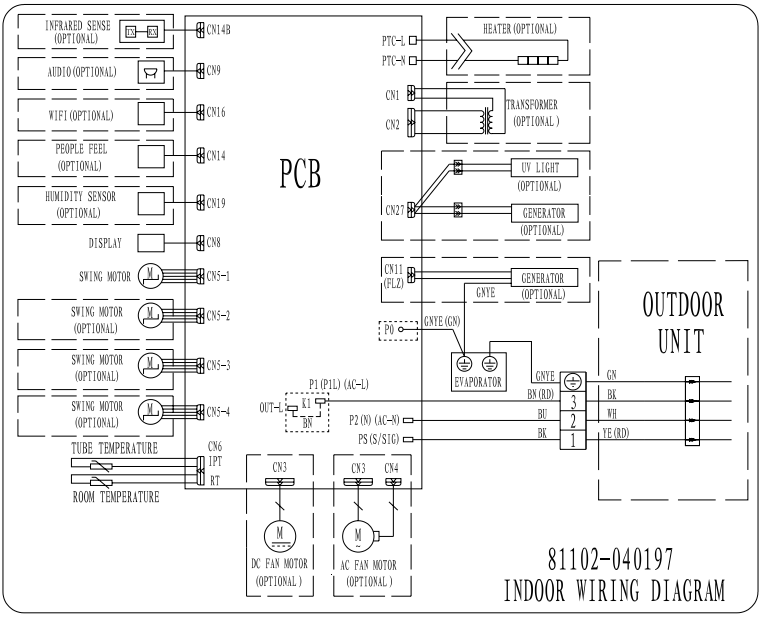

(36K)

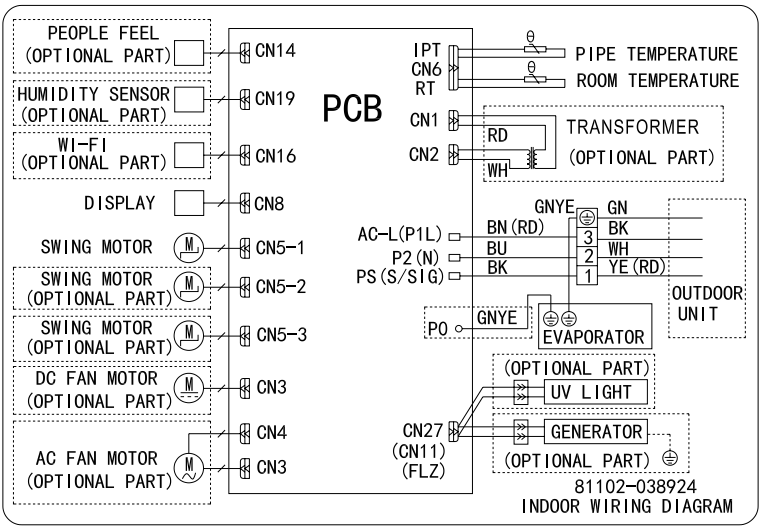

Dedicated Distribution Device and Wire for Air Conditioner

Wiring material ampacities	AWG
4	22
7	20
10	18
13	16
18	14
25	12
30	10
40	8
55	6
70	4

⚠ Note: This table is only for reference, the installation shall meet the requirements of local laws and regulations. The suitable temperature for selecting wire gauge is 25℃±5℃.

Power Supply				
Model	Voltage	MCA	Breaker	Recommended power cord specifications
9K	115V	17	25	14AWG
9K	208-230V	10	15	14AWG
12K	115V	17	25	14AWG
12K	208-230V	11	15	14AWG
18K	208-230V	13	20	14AWG
24K	208-230V	20	30	14AWG
36K	208-230V	22	35	12AWG

This air conditioner does not include a power cord. A licensed electrician should be consulted to select and install the appropriate power cord based on the model and the local voltage requirements.

Vacuum Pumping

Use a vacuum pump to vacuum from the gas-side refrigerant charging port of the outdoor unit.

If air and moisture remain inside the refrigeration system, they may have the following adverse effects:

- A rise in pressure inside the refrigeration system;
- A decrease in cooling effect;
- Moisture freezing and blocking the refrigeration system;
- Rusting of certain system components.
- Don’t use the outdoor unit’s refrigerant to perform vacuuming. (A certain volume of refrigerant was added to the outdoor unit at the factory.)
- When a vacuum pump is used, each low-pressure valve must be operated as follows.

Please refer to the operation manual for the usage of the manifold valve.

1. Use a spanner to take down the protective caps from the service port, low pressure valve and high pressure valve of the outdoor unit.
2. Connect the pressure hose of manifold gauge to the service port on the outdoor unit low pressure valve.

3. Connect the charge hose from the manifold gauge to the vacuum pump.
4. Open the low pressure valve of the manifold gauge and close the high pressure valve.
5. Turn on the vacuum pump to vacuum the system.
6. The vacuum time should not be less than 15 minutes, or make sure the compound gauge indicates -0.1 MPa(-76 cmHg)
7. Close the low pressure valve of the manifold gauge and turn off the vacuum.
8. Hold the pressure for 5 minutes, make sure that the rebound of compound gauge pointer does not exceed 0.005 MPa.
9. Open the low pressure valve counterclockwise for 1/4 turn with hexagonal wrench to let a little refrigerant fill in the system, and close the low pressure valve after 5 seconds and quickly remove the pressure hose.
10. Check all indoor and outdoor joints for leakage with soapy water or leak detector.
11. Fully open the low pressure valve and high pressure valve of the outdoor unit with hexagonal wrench.
12. Reinstall the protective caps of the service port, low pressure valve and high pressure valve of the outdoor unit.
13. Reinstall the valve cover.

- The following figure only shows the assembly relationship of the indoor unit, outdoor unit, and refrigerant pipes.
- Please refer to the following figures to install.

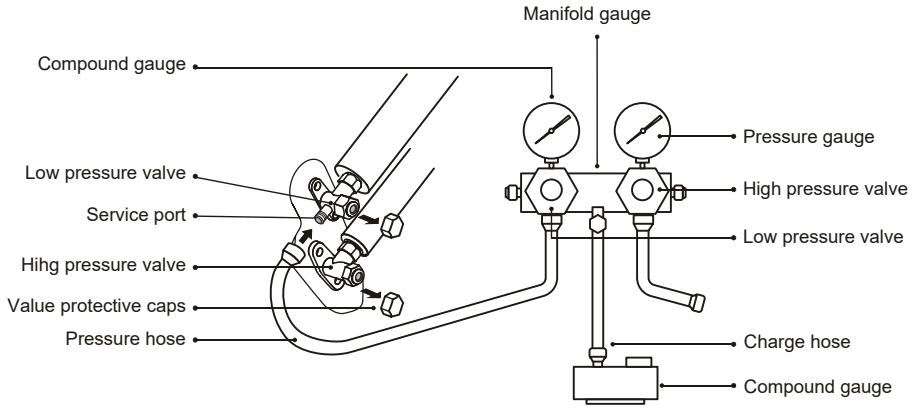

Test Operation

Inspections Before Test Run

Do the following checks before test run.

Description	Inspection method
Electrical safety inspection	• Check whether the power supply voltage complies with specification. • Check whether there is any wrong or missing connection between the power lines, signal line and earth wires. • Check whether the earth resistance and insulation resistance comply with requirements.
Installation safety inspection	• Confirm the direction and smoothness of drainage pipe. • Confirm that the joint of refrigerant pipe is installed completely. • Confirm the safety of outdoor unit, mounting plate and indoor unie installation. • Confirm that the valves are fully open. • Confirm that there are no foreign objects or tools left inside the unit. • Complete installation of indoor unit air inlet grille and panel.
Refrigerant leakage detection	• The piping joint, the connector of the two valves of the outdoor unit, the valve spool, the welding port, etc., where leakage may occur. • Foam detection method: Apply soapy water or foam evenly on the parts where leakage may occur, and observe whether bubbles appear or not, if not, it indicates that the leakage detection result is safe. • Leak detector method: Use a professional leak detector and read the instruction of operation, detect at the position where leakage may occur. • The duration of leak detection for each position should last for 3 minutes or more; If the test result shows that there is leakage, the nut should be tightened and tested again until there is no leakage; After the leak detection is completed, wrap the exposed pipe connector of indoor unit with thermal insulation material and wrap with insulation tape.

Test Run Instruction

1. Turn on the power supply.
2. Press the ON/OFF button on the remote controller to turn on the air conditioner.
3. Press the Mode button to switch the mode COOLING and HEATING.

   In each mode set as below:

- COOLING-Set the lowest temperature
- HEATING-Set the highest temperature

4. Run about 8 minutes in each mode and check all functions are properly run and respond the remote controller. Functions check as recommended:

1) If the outlet air temperature responds to the cooling and heating modes
2) If the water drains properly from the drainage hose
3) If the Louver and deflectors(optional) rotate properly

5. Observe the test run state of the air conditioner at least 30 minutes.
6. After the successfully test run, return the normal setting and press ON/OFF button on the remote controller to turn off the unit.
7. Inform the user to read this manual carefully before use, and demonstrate to the user how to use the air conditioner, the necessary knowledge for service and maintenance, and the reminder for storage of accessories.

Note: If the ambient temperature exceeds the range mentioned in the section OPERATION INSTRUCTIONS, and it can not run COOLING or HEATING mode, lift the front panel and refer to the emergency button operation to run the COOLING and HEATING mode.

Maintenance

⚠ **Warning**	• When cleaning, you must shut down the machine and cut off the power supply for more than 5 minutes. • Under no circumstances should the air conditioner be flushed with water. • Volatile liquid (e.g. thinner or gasoline) will damage the air conditioner, so only use soft dry cloth or wet cloth dipped with neutral detergent to clean the air conditioner. • Pay attention to cleaning the filter screen regularly to avoid dust covering which will affect the filter screen effect. When the operating environment is dusty, the cleaning frequency should be increased appropriately. • After removing the filter screen, do not touch the fins of the indoor unit to avoid scratching.
Clean the unit	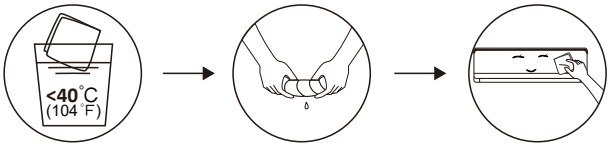 Wring it dry and gently wipe the surface of the unit Tip: Wipe frequently to keep air conditioner clean and good appearance .
Clean the filter	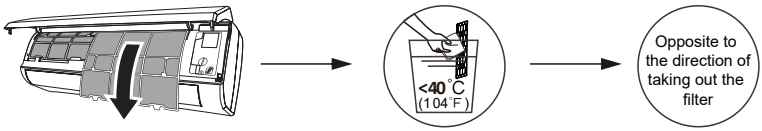 Take out the filter from the unit Clean the filter with soapy water and air dry it Replace the filter Tip: When you find accumulated dust in the filter, please clean the filter in time to ensure the clean, healthy and efficient operation inside the air conditioner.
Service and maintenance	• When the air conditioner is not in use for a long time, do the following work: Take out the batteries of the remote controller and disconnect the power supply of the air conditioner. • When starting to use after long-term shutdown: 1. Clean the unit and filter screen; 2. Check whether there are obstacles at the air inlet and outlet of indoor and outdoor units; 3. Check whether the drain pipe is unobstructed; Install the batteries of the remote controller and check whether the power is on.

Troubleshooting

MALFUNCTION	POSSIBLE CAUSES
The appliance does not operate	Wrong wiring connection
	Power failure/power terminal pulled out.
	Damaged indoor/outdoor unit fan motor.
	Faulty compressor thermomagnetic circuit breaker.
	Faulty protective device or fuses.
	Loose connections or power terminal pulled out.
	It sometimes stops operating to protect the appliance.
	Voltage higher or lower than the voltage range.
	Active TIMER-ON function.
	Damaged electronic control board.
Strange odor	Dirty air filter.
Noise of running water	Back flow of liquid in the refrigerant circulation.
A fine mist comes from the air outlet	This occurs when the air in the room becomes very cold, for example in the "COOLING" or "DEHUMIDIFYING/DRY" modes.
A strange noise can be heard	This noise is made by the expansion or contraction of the front panel due to variations in temperature and does not indicate a problem.
Insufficient airflow, eitherhot or cold	Unsuitable temperature setting.
	Obstructed air conditioner intakes and outlets.
	Dirty air filter.
	Fan speed set at minimum.
	Other sources of heat in the room.
	No refrigerant.
The appliance does not respond to commands	Remote control is not close enough to indoor unit.
	The batteries of remote control need to be replaced.
	Obstacles between remote control and signal receiver in indoor unit.
The display is off	Active DISPLAY function.
	Power failure.
Switch off the air conditioner immediately and cut off the power supply in the event of:	Strange noises during operation.
	Faulty electronic control board.
	Faulty fuses or switches.
	Spraying water or objects inside the appliance.
	Overheated cables.
	Very strong smells coming from the appliance.

ERROR CODE ON THE DISPLAY

In case of error, the display on the indoor unit shown the following error codes:

Display	Description of the trouble
E1	Indoor room temperature sensor fault
E2	Indoor pipe temperature sensor fault
E3	Outdoor pipe temperature sensor fault
E4	Refrigerant system leakage or fault
E6	Malfunction of indoor fan motor
E7	Outdoor ambient temperature sensor fault
E0	Indoor and outdoor communication fault
E8	Outdoor discharge temperature sensor fault
E9	Outdoor IPM module fault
EA	Outdoor current detect fault
EE	Outdoor PCB EEPROM fault
EF	Outdoor fan motor fault
EH	Outdoor suction temperature sensor fault

Disposal Guideline

1) Minimum installation height, minium room area(operating or storage) refer to installation manual.

1) La taille minimale d'installation, la surface minimale de pièce (opération ou stockage) se réfèrent au manuel d'installation.

2) Risk Of Fire-Auxiliary devices which may be ignition sources shall not be installed in the ductwork, other than auxiliary devices listed for use with the specific appliance. See instructions.

2) Risque d'incendie - l'équipement auxiliaire qui peut être une source d'inflammation ne doit pasêtre installé dans le système de tuyauterie, a l'exception de l'équipement auxiliaire utilisé avec unéquipement spécifique. Voir les instructions.

3) Mount with the lowest moving parts at least 2.5m (8.2ft) above floor or grade level.

3) Installé avec la partie mobile la plus basse au moins 2.5m(8.2ft) au-dessus du sol ou du plan du sol.

4) Risk of electric shock. Can cause injury or death. Disconnect all remote electric power supplies before servicing.

4)Risque de choc électrique. Causer des blessures ou la mort. Avant la réparation, débranchez toute alimentation à distance.

5) Risk of Fire. Flammable Refrigerant Used. To Be Repaired Only By Trained Service Personnel. Do Not Puncture Refrigerant Tubing.

5) Risque d'incendie. Utilisation de réfrigérants inflammables. L'entretien ne peut être effectué que par un personnel de maintenance formé. Ne pas percer la ligne de réfrigérant.

6) Risk Of Fire. Dispose Of Properly In Accordance With Federal Or Local Regulations.Flammable Refrigerant Used.

6) Risque d'incendie. Disposer correctement conformément à la réglementation fédérale ou locale. Utilisation de réfrigérants inflammables.

7) Risk Of Fire. Flammable Refrigerant Used. Consult Repair Manual/Owner's Guide Before Attempting To Service This Product.All Safety Precautions Must Be Followed.

7) Risque d'incendie. Utilisation de réfrigérants inflammables. Veuillez consulter le manuel de réparation/guide de l'utilisateur avant d'essayer de réparer ce produit. Toutes les précautions de sécurité doivent être respectées.

8) Risk Of Fire. Due to Flammable Refrigerant Used.Follow Handling Instructions Carefully in Compliance with National Regulations.

8) Risque d'incendie causé par l'utilisation de réfrigérants inflammables. Suivez attentivement les instructions de manutention conformément aux réglementations nationales.