Müeller

PROFESSIONAL SERIES
FREESTANDING GAS RANGE

36" MGR-600 Series | 48" MGR-670 Series

USER MANUAL

Your satisfaction is guaranteed. If you are not completely satisfied with our Freestanding Gas Range, please let us know. We will do our best to make things right for you.

GAS WARNING

IF THE INFORMATION IN THIS MANUAL IS NOT FOLLOWED EXACTLY, A FIRE OR AN EXPLOSION MAY OCCUR, CAUSING PROPERTY DAMAGE, PERSONAL INJURY OR POSSIBLE DEATH.

DO NOT STORE OR USE GASOLINE, A LIQUID PROPANE CYLINDER OR OTHER FLAMMABLE VAPORS AND LIQUIDS IN THE VICINITY OF THIS APPLIANCE. ANY LIQUID PROPANE CYLINDER NOT CONNECTED FOR USE SHALL NOT BE STORED IN THE VICINITY OF THIS OR ANY OTHER APPLIANCE.

WHAT TO DO IF YOU SMELL GAS

- Open all windows starting with those closest to the appliance.
- Do not try to light any appliance.
- Do not touch any electrical switch.
- Do not use any phone in your building.
- Immediately call your gas supplier from a neighbor's phone. Follow the gas supplier's instructions.
- If you cannot reach your gas supplier, call the fire department.

INSTALLATION

- Installation and service of your range must be performed by a licensed installer, an approved service agency or your gas supplier.
- (In Massachusetts installation must be performed by a licensed plumber/ gas fitter.)
- Do not remove the model/serial number sticker attached to the appliance.
- Note to the installer: Please leave this user manual with the consumer for the local electrical / gas inspector's use.

WARNING:

- **Cooking with gas stoves can increase the risk of respiratory problems, heart disease, and cancer.**
- **Use an exhaust hood that vents to the outside.**
- **Keep burners clean and free of grease.**
- **Don't cook on high heat for long periods of time.**
- **Open windows when you're cooking.**

For more information, call the National Poison Control Center at 1-800-222-1222.

CONTENTS

IMPORTANT SAFEGUARDS 4
HANDLING AND UNPACKING 4
CORRECT USAGE 4
CHILDREN 5
TECHNICAL SAFETY 5
COOKING SAFETY 7
PARTS 11
36 INCH SERIES 11
48 INCH SERIES 13
RANGE INSTALLATION 15
TOOLS REQUIRED 15
DIMENSIONS 16
INSTALLATION 17
CLEARANCES AND VENTILATION 18
HOOD / COMPOSITE OVERLAY INSTALL 20
LEVELING 21
ELECTRIC POWER SUPPLY REQUIREMENTS 22
GROUNDING 22
WIRING DIAGRAMS 24
GAS SUPPLY REQUIREMENTS 26
CONNECT RANGE TO GAS SUPPLY 27
LIQUEFIED PETROLEUM (PROPANE) GAS CONVERSION (Optional) 28
ANTI-TIP BRACKET 34
COMPONENT PART ASSEMBLY 35
BEFORE FIRST USE 42
COOKTOP OPERATION 43
GRIDDLE OPERATION 47
OVEN OPERATION 48
CARE AND CLEANING 51
TROUBLESHOOTING 56
SPECIFICATIONS 58

SAVE THESE INSTRUCTIONS
FOR HOUSEHOLD USE ONLY

IMPORTANT SAFEGUARDS

This User Manual contains important information on how to install and set up your new range, safe use, and maintenance, as well as insights into the product features.

READ ALL INSTRUCTIONS BEFORE INSTALLING AND OPERATING YOUR PROFESSIONAL SERIES FREESTANDING GAS RANGE FOR THE FIRST TIME. IF THE INFORMATION IN THIS MANUAL IS NOT FOLLOWED EXACTLY, A FIRE, EXPLOSION OR BURN HAZARD MAY RESULT, CAUSING PROPERTY DAMAGE, PERSONAL INJURY OR EVEN DEATH.

To reduce these risks when using this product, basic safety precautions should always be followed, including the following:

HANDLING AND UNPACKING

• WARNING: EXTREMELY HEAVY. Use proper equipment and adequate manpower to move the range to avoid personal injury or damage to the unit or the floor. The unit is heavy and rests on adjustable steel legs.

• Before moving the range, protect any finished flooring and secure the oven door closed to prevent damage.

• WARNING: DO NOT LIFT OR CARRY THE COOKING RANGE BY THE OVEN DOOR HANDLE OR THE CONTROL PANEL.

• IMPORTANT: LET THE RANGE REST FOR A PERIOD OF 24 HOURS ONCE YOU HAVE PLACED IT IN YOUR HOME.

• Do not remove the rating label at the back of the range, nor the serial number sticker located within the oven door frame. This may void the warranty.

• Do not discard the anti-tip bracket or LP Gas Conversion Kit supplied with the range.

CORRECT USAGE

• This appliance is intended for use in domestic households and in similar working and residential environments. It is not suitable for any non-domestic application and therefore should not be used in a commercial environment.

• This appliance is intended to be used for such purposes as cooking and keeping food warm. Do not use the appliance in any other way than its intended use.

• This appliance is not intended for outdoor use.

• **Persons (including children) who lack physical, sensory, or mental capabilities, or experience with the appliance should not use it without supervision or instruction by a responsible person.**

• Do not use this range while under the influence of alcohol or other substances that affect your reaction time or perception.

CHILDREN

• Children should not be left alone or unattended in an area where the appliance is in use.

• Never allow children to sit or stand on any part of the appliance.

• Do not store items of interest to children above or at the back of the appliance. Children climbing on the appliance to reach these items could be injured.

• The appliance is hot during use and remains so for some time after being switched off. Keep children away from the appliance.

• Keep all cookware and their handles out of the reach of children. Danger of burning or scalding.

WARNING: Ensure that any packing material, including any plastic bags or film, are disposed of safely and kept out of the reach of children. Do not use plastic bags in cribs, beds, carriages or play pens. These bags are not toys. Danger of suffocation!

TECHNICAL SAFETY

• Installation, grounding, repair, and maintenance must be performed by a qualified installer, an approved service agency, or the gas supplier in accordance with all local codes and ordinances and, in the absence of local codes, with the National Fuel Gas Code, NFPA 54 / ANSI Z223.1, and the National Electrical Code, NFPA 70 (NEC), latest edition as adopted by the authority having jurisdiction, in the United States; or in Canada, with CSA B149.1, CSA B149.2, and the Canadian Electrical Code, Part I (CSA C22.1), as adopted by the authority having jurisdiction.

• IN THE STATE OF MASSACHUSETTS, THE FOLLOWING INSTALLATION INSTRUCTIONS APPLY:

- Installations and repairs must be performed by a qualified or licensed contractor, plumber, or gas-fitter qualified or licensed by the State of Massachusetts.
- If using a ball valve, it shall be a T-handle type.
- A flexible gas connector, when used, must not exceed three feet.

• Before installation, make sure that the voltage and frequency listed on the rating label correspond with the household electrical supply. This data must correspond to prevent injury and appliance damage. Consult a qualified electrician if in doubt.

• Before installation, select a suitable area that abides by the clearance measurements noted in the 'RANGE INSTALLATION' section of this manual.

IMPORTANT: Before installation, ensure the area will be well ventilated, with a suitable ventilation system.

IMPORTANT: Do not install a ventilation system that blows air downward toward this gas cooking appliance. This type of ventilation system may cause ignition and combustion problems with this gas cooking appliance resulting in personal injury or unintended operation.

• Before installing the range, check for externally visible damage. Do not operate a damaged appliance. A damaged gas range is a hazard.

IMPORTANT: This appliance is equipped with a three-prong (grounding) plug for your protection against shock hazard and should be plugged directly into a properly grounded three-pronged receptacle. **DO NOT cut or remove the grounding prong from this plug.**

• The range has been adjusted for Natural Gas at manufacture. Any conversion to LP Gas must be installed by a qualified service technician in accordance with all applicable codes and requirements of the authority having jurisdiction. Before proceeding with any conversion, ensure the gas supply is shut off and the electrical power to the range is disconnected. Do not operate the cooktop or oven burners of this range when using LP (bottled) gas before converting the pressure regulator and burner orifices for LP gas use. Failure to do so could cause high flames and toxic fumes which can result in serious injury.

• Do not use an adapter or extension cord to connect this appliance to electricity. Extension cords do not guarantee the required safety of the appliance.

• To guarantee the electrical safety of this appliance, continuity must exist between the appliance and an effective grounding system. It is imperative that this basic safety requirement be met. If there is any doubt, have the electrical system of the residence checked by a qualified electrician.

• The appliance, when installed, must be electrically grounded in accordance with local codes or, in the absence of local codes, with the National Electrical Code, ANSI/NFPA 70. In Canada, the appliance must be electrically grounded in accordance with Canadian Electrical Code. Do not operate the appliance until it has been properly installed and grounded by a qualified technician.

• Have the technician show you the location of the gas shut off valve and how to shut it off in case of an emergency situation.

• Before servicing, turn off the gas valve and disconnect the power supply by either removing the fuse, unplugging the unit, or manually "tripping" the circuit breaker.

• Under no circumstance open the outer casing of the appliance. This is a safety hazard and may damage the appliance.

• Service or repairs should only be carried out by a qualified service technician. Do not attempt to repair the appliance yourself.

• For safety, only use parts / components recommended by the manufacturer.

• The appliance is not designed for use with an external timer or a remote-control system.

• Do not operate the appliance if the power cord or plug is damaged, or if the appliance has been damaged in any manner.

• In the event of damage or defect, turn off the appliance immediately. Turn off the gas shut off valve and disconnect completely from the electrical supply. Do not use the appliance until it has been repaired. Ensure power is not supplied to the appliance while repair work is carried out.

WARNING: Gas appliances can cause minor exposure to four of these substances, namely benzene, carbon monoxide, formaldehyde, and soot, caused primarily by the incomplete combustion of natural gas fuel. When operating your range on natural gas, the flames from the burners should be blue in color. In addition, the flames should be stable, free of yellow tipping, excessive noise and lifting. However, this yellow tipping should be restricted to the primary flame kernels only. Properly adjusted burners, indicated by a bluish rather than a yellow flame, will minimize incomplete combustion. Exposure to those substances can be minimized by venting with an open window or use of a ventilation fan or hood.

• Before discarding an old appliance, disconnect it from the gas and electrical supply, and cut off the power cord to prevent it from becoming a hazard.

• To reduce the risk of burns, do not move this appliance while hot.

WARNING: TIP-OVER HAZARD

TO REDUCE THE RISK OF THE APPLIANCE TIPPING OVER, THE RANGE MUST BE SECURED BY THE ANTI-TIP DEVICE PACKED WITH THE APPLIANCE. IF THE ANTI-TIP BRACKETS ARE NOT PROPERLY INSTALLED, THE RANGE MAY TIP, CAUSING DAMAGE TO THE APPLIANCE AND SERIOUS BURNS OR INJURY TO PERSONS OR POSSIBLE DEATH. See 'RANGE INSTALLATION' for further instructions.

COOKING SAFETY

• Make sure all components of the range are assembled correctly before using the cooktop or oven.

• Gas leaks cannot always be detected by smell. Gas suppliers recommend that you use a gas detector approved by UL or CSA. For more information, contact your gas supplier.

• Do not leave the range unattended while in use. Boil-overs cause smoking, and greasy spillovers may ignite.

• The range and its parts will be extremely hot during use. Always use protective gear such as oven mitts or potholders when using the appliance. Do not touch the open flame.

• Use only dry, heat resistant potholders. Moist or damp potholders used on hot surfaces can result in steam burns. Do not let the potholder touch the hot heating

elements. Do not use towels or other bulky items near the appliance.

- The appliance is hot during use. Do not touch the Burner Grates, Griddle, Burner Caps, Burner Heads, Oven Racks, oven glass, or any other parts in proximity to the flame or oven heating elements. These components may be hot enough to cause burns.

- Be sure to turn all controls off when not in use. The appliance will remain hot for some time after turning off. Do not touch the cooktop area or interior of the ovens until cool.

- Be sure the oven cool air intake (top interior of oven door) and oven exhaust vent (below the door) are unobstructed at all times.

- When using the oven, open the door carefully to allow hot air or steam to escape before placing or removing food.

- The Burner Grates supplied with the appliance must always be used. Never place cookware on the burner by itself.

- Do not operate a Burner for an extended period of time without cookware on the Burner Grates. The finish of the grates might chip without cookware to absorb the heat.

- Ensure the cookware you are using is suitable for a gas cooktop or oven. Only certain types of glass, ceramic or other glazed cookware are suitable for use on a cooktop without breaking due to the sudden temperature change.

- Cookware that conducts heat slowly, i.e., glass pots, should be used in conjunction with burner flames at a low or medium setting.

- Do not use cookware with a base that extends past the Burner Grate. Using larger cookware may cause the flames to spread out and damage the surrounding countertop or other countertop appliances.

- For safety and stability, do not use cookware with a bottom diameter smaller than the burner grate opening.

- Do not use cookware so large that it covers several burners. The resulting heat accumulation can damage the appliance.

- Select a heat source size that is as close as possible to the bottom diameter of the cookware. Also, keep gas flames confined to the base only and not the sidewalls of the cookware.

- Do not heat empty pots or pans. This may cause damage to the cookware and the surrounding area. Danger of fire.

- Always turn pot handles to the side or back of the range. Do not turn handles towards the area where they can be easily burned. Handles should not extend over the adjacent burners.

• Do not heat unopened food containers, such as baby food jars or cans. Built-up pressure may cause the container to explode and result in injury.

• Do not use stove top grills on your gas appliance, unless it is a grill specifically designed for the appliance from the manufacturer. If you use a stove top grill on a sealed gas burner, it will cause incomplete combustion and can result in exposure to carbon monoxide levels above allowable current standards. This can be hazardous to your health.

• Do not use plastic or aluminum foil to line any part of the range. It melts at high temperatures and can damage the porcelain and is a fire hazard.

• Do not hang any articles (i.e., dish towels) off the oven handle as some fabrics may ignite or melt from the heat.

• Do not leave the oven door open unnecessarily as someone may trip over or be injured.

• Do not use the oven for frying.

• WARNING: Do not use water on grease fires. Smother any fire or flame using a lid, close the oven door, or use a dry chemical or foam-type extinguisher.

• Use an extinguisher ONLY if:
- You know you have a Class A, B or C extinguisher, and you already know how to operate it.
- The fire is small and contained in the area where it started.
- The fire department is being/has been called.
- You can fight the fire with your back to an exit.

• Do not flambé under an exhaust hood. Flames could be drawn up into the hood by the suction or the grease filters may ignite.

• Do not let cooking grease or other flammable materials accumulate on the appliance. Fire Hazard.

• Spills containing salt or sugar should be removed as soon as possible (when surface is safe to touch), particularly on the porcelain surfaces.

• Ensure proper ventilation during use with a running ventilation hood as well as open window if possible.

• When using a portable appliance near the range, make sure that its power cord does not come in contact with the cooktop or oven door.

• Do not store items on or in the appliance when not in use. Items could melt or catch fire from residual heat or if the appliance is turned on inadvertently. Always switch the control knobs off after use.

• Do not use decorative surface burner covers. If a burner is accidentally turned on, the decorative cover will become hot and possibly melt. You will not be able to see that the burner is on. Burns will occur if the hot covers are touched. Damage may

also be done to the appliance or burners because the covers may cause overheating. Air will be blocked from the burner and cause combustion problems.

- **WARNING: DO NOT store or use gasoline, aerosols, combustible liquids or other easily flammable vapors or materials in the vicinity of this appliance.**

- Exhaust fan ventilation hoods and grease filters should be kept clean. Do not allow grease to accumulate on hood or filter. Greasy deposits in the fan could catch fire.

- If the gas range is installed behind a cabinet door, it must only be used with the door open. Only close the cabinet door when the appliance is switched off and cool.

- Clean appliance with caution. Do not use abrasive or caustic cleaners or detergents on this appliance. They may cause permanent damage to the surface.

- If the gas range has not been used for an unusually long time, it should be thoroughly cleaned before using it again and checked that it is working properly by an authorized expert.

- Keep a fire extinguisher handy.

WARNING: NEVER USE THIS APPLIANCE AS A SPACE HEATER TO HEAT OR WARM THE ROOM. DOING SO MAY RESULT IN CARBON MONOXIDE POISONING AND OVERHEATING.

⚠ STATE OF CALIFORNIA PROPOSITION 65 WARNINGS:

- This product contains a chemical known to the state of California to cause cancer, or birth defects or other reproductive harm.
- The California Safe Drinking Water and Toxic Enforcement Act requires the Governor of California to publish a list of substances known to the state to cause birth defects or other reproductive harm and requires businesses to warn customers of potential exposure to such substances.
- Gas appliances can cause minor exposure to four of these substances, namely, carbon monoxide, benzene, formaldehyde and soot, caused primarily by the incomplete combustion of natural gas or LP fuels. Properly adjusted burners, indicated by a bluish rather than yellow flame, will minimize incomplete combustion. Exposure to these substances can be minimized by venting with an open window or by using a ventilation fan or hood.

KEEP THIS MANUAL IN A SAFE PLACE FOR FUTURE REFERENCE AND REVIEW PERIODICALLY.

PARTS

36 Inch Series

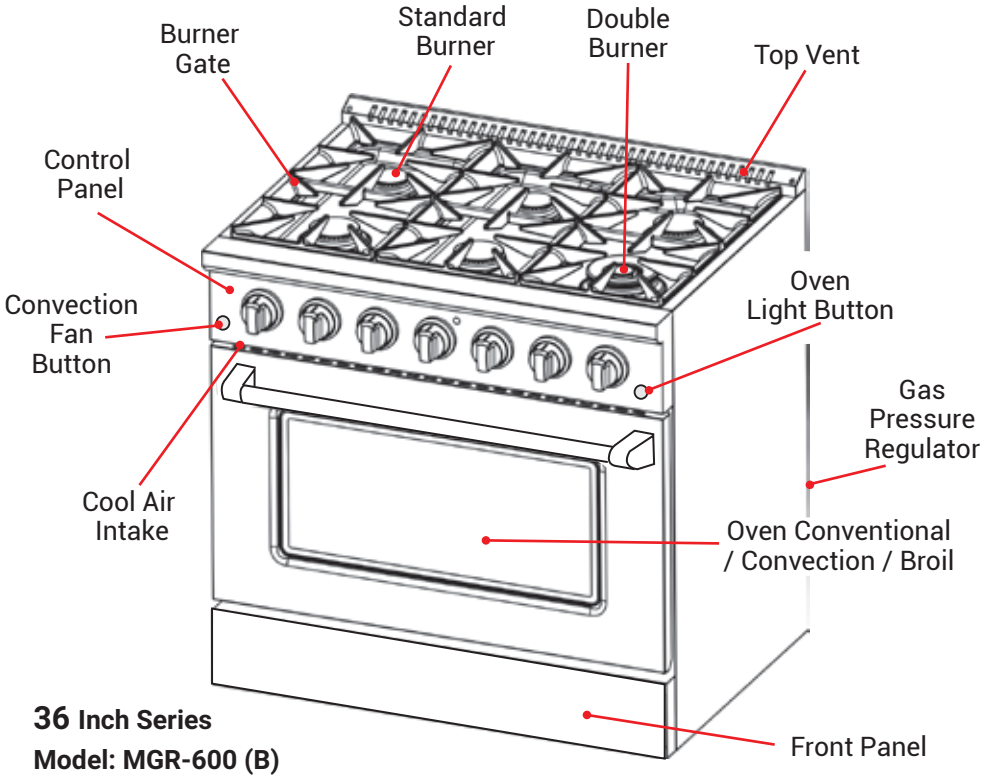

36 Inch Series

Model: MGR-600 (B)

INCLUDES:

3 Cast Iron Burner Grates

5 Standard Burner Caps

1 Double Burner Cap Set

5 Standard Aluminum Burner Heads

1 Brass Double Burner Head

1 Porcelain Enameled Cast Iron Double-Sided Griddle *(Applicable for limited models)*

2 Stainless Steel Oven Racks

2 Stainless Steel Oven Rack Guides (Pre-installed)

1 Tip-Over Bracket Set (2 Brackets, 2 Bolts, 4 Screws, 4 Wall Anchors)

1 Liquid Propane Gas Conversion Kit (Brass Orifices / Nozzles – 10 Pieces)

7 Extra Knobs (6x Standard, 1x Oven) *(Applicable for limited models)*

1 Extra Oven Handle (with Hex Key) *(Applicable for limited models)*

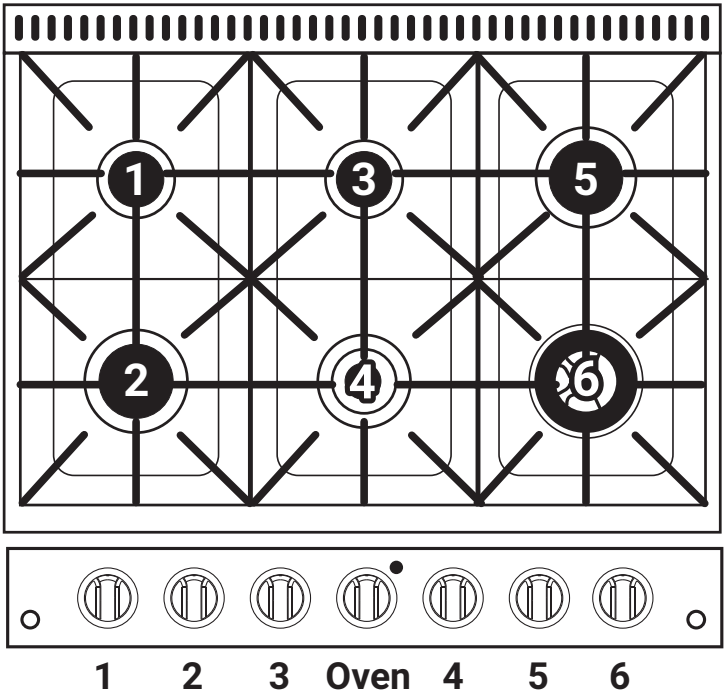

Burner	BTU/H	Burner Type	Position	NG Orifice	LP Orifice
1	9,000	SEMI-RAPID	BACK LEFT (B/L)	1.36	0.9
2	15,000	RAPID	FRONT LEFT (F/L)	1.79	1.16
3	9,000	SEMI-RAPID	BACK MIDDLE (B/M)	1.36	0.9
4	6,000	AUXILIARY	FRONT MIDDLE (F/M)	1.07	0.74
5	12,000	SEMI-RAPID	BACK RIGHT (B/R)	1.57	1.0
6	20,000	DOUBLE FLAME	FRONT RIGHT (F/R)	1.36*2+0.73	0.89*2+0.53
Oven	**BTU/H**		**Position**		
	22,000		Convection Oven	2.13	1.4
	10,000		Broil Function	1.42	0.94
Total	**103,000**		**6 Burners + Oven**		

48 Inch Series

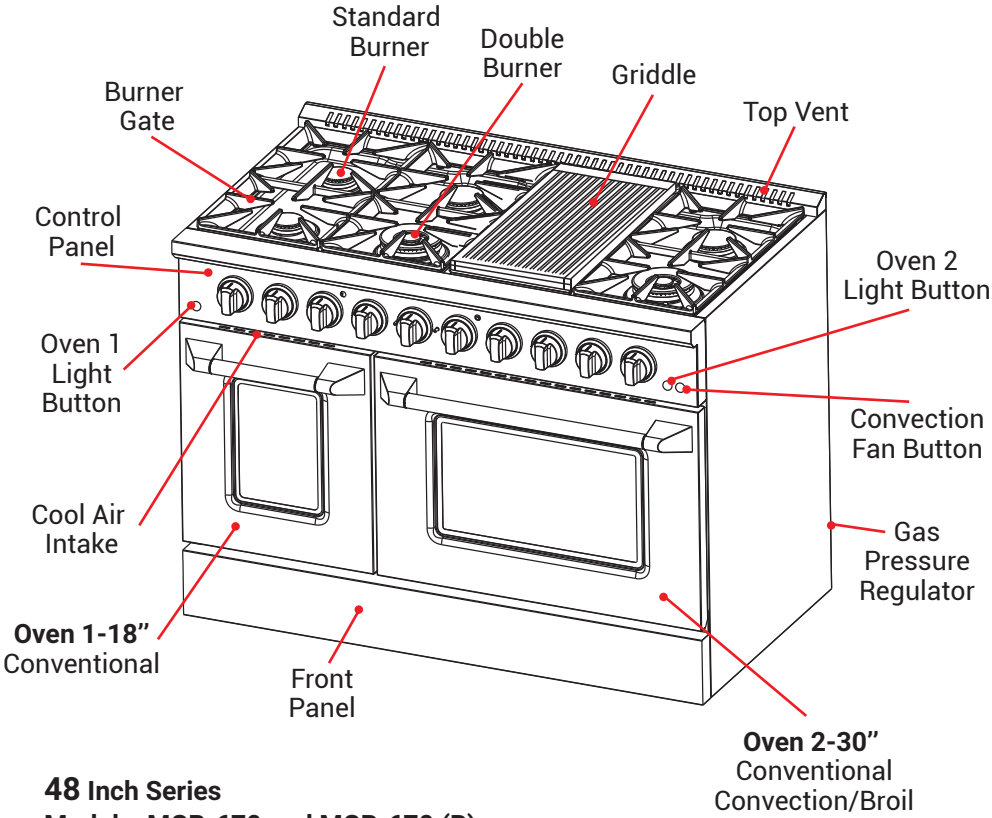

48 Inch Series
Models: MGR-670 and MGR-670 (B)

INCLUDES:

4 Cast Iron Burner Grates

1 Porcelain Enameled Cast Iron Double-Sided Griddle

6 Standard Burner Caps

2 Double Burner Caps

6 Standard Aluminum Burner Heads

2 Brass Double Burner Heads

4 Stainless Steel Oven Racks

4 Stainless Steel Oven Rack Guides (Pre-installed)

1 Tip-Over Bracket Set (2 Brackets, 2 Bolts, 4 Screws, 4 Wall Anchors)

1 Liquid Propane Gas Conversion Kit (Brass Orifices / Nozzles – 15 Pieces)

10 Extra Knobs (8x Standard + 2x Oven) *(Applicable for limited models)*

1 Extra Oven Handle (with Hex Key) *(Applicable for limited models)*

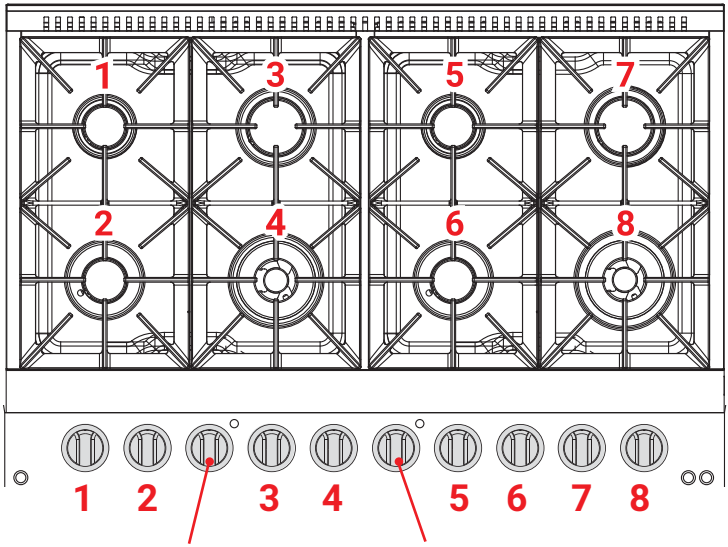

Burner	BTU/H		Position	NG Orifice	LP Orifice
1	9,000	SEMI-RAPID	BACK LEFT (B/L)	1.36	0.9
2	6,000	AUXILIARY	FRONT LEFT (F/L)	1.07	0.74
3	12,000	SEMI-RAPID	BACK MIDDLE LEFT (B/M/L)	1.57	1.0
4	20,000	DOUBLE FLAME	FRONT MIDDLE LEFT (F/M/L)	1.36*2+0.73	0.89*2+0.53
5	9,000	SEMI-RAPID	BACK MIDDLE RIGHT (B/M/R)	1.36	0.9
6	6,000	AUXILIARY	FRONT MIDDLE RIGHT (F/M/R)	1.07	0.74
7	12,000	SEMI-RAPID	BACK RIGHT (B/R)	1.57	1.0
8	20,000	DOUBLE FLAME	FRONT RIGHT (F/R)	1.36*2+0.73	0.89*2+0.53
Oven	**BTU/H**		**Position**		
1 – 18"	14,000		Left	1.68	1.09
2 – 30"	22,000		Right	2.13	1.4
2 – 30"	10,000		Broil Function, Right Oven only	1.42	0.94
Total	**140,000**		**8 Burners + 2 Ovens**		

RANGE INSTALLATION

TOOLS REQUIRED

Tape measure

Screwdriver

Flat blade screwdriver

1/8” flat blade screwdriver

Hex screwdriver

Level

Hand or electric drill

Wrench or pliers

Pipe wrench

15/16" combination wrench

1/8” (3.2 mm) drill bit (for wood floors)

Marker or pencil

Pipe-joint compound resistant to LP gas

Noncorrosive leak-detection solution

For Additional Parts:
Check local codes, consult gas supplier and check existing gas/electrical supply.

DIMENSIONS

36 Inch Series

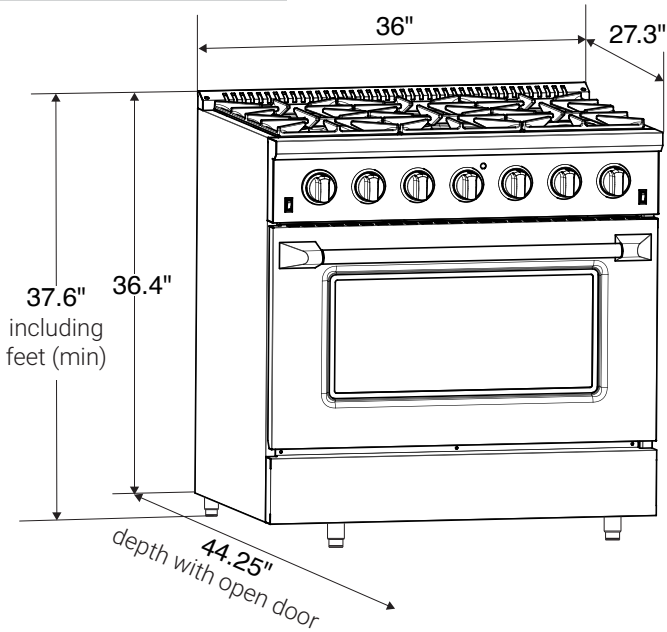

48 Inch Series

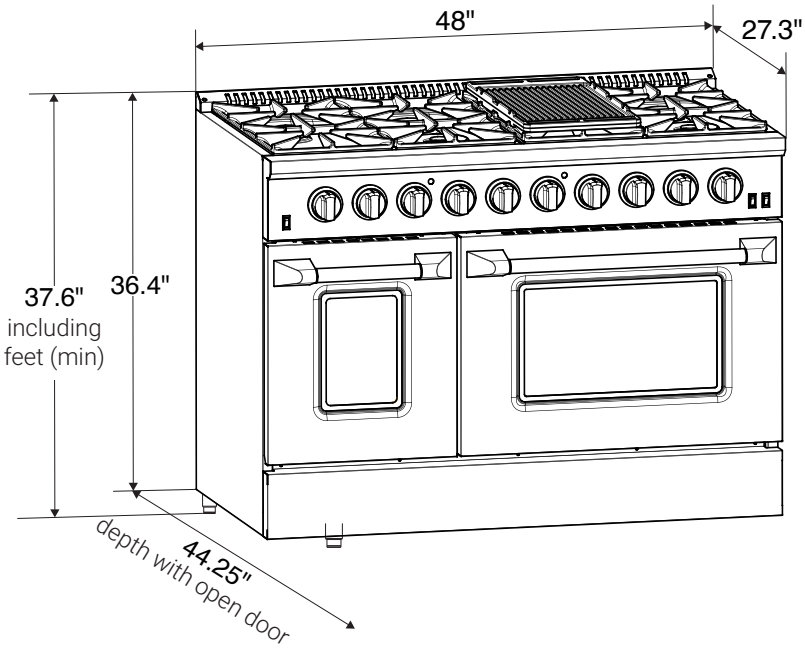

Side View
36 and 48 Inch

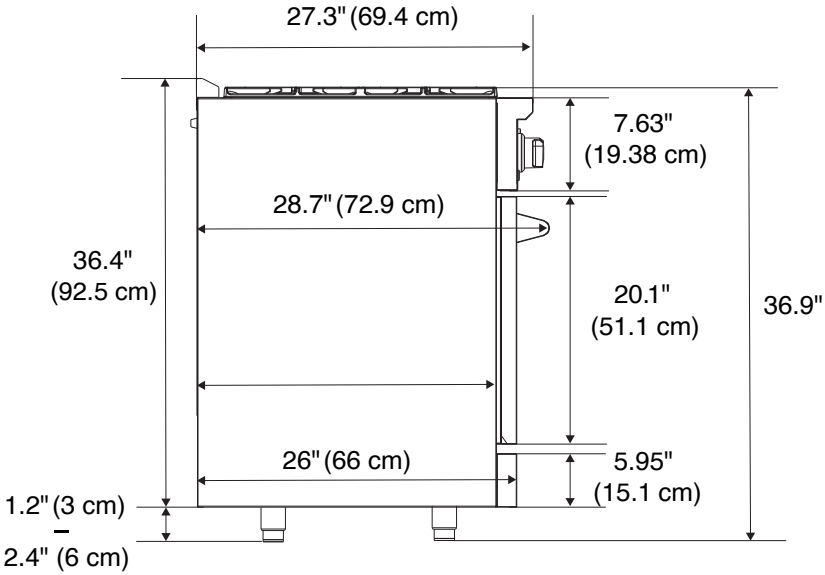

INSTALLATION

- **WARNING: Do not lift or carry the range by the oven handle.**
- Remove and recycle packaging and keep out of reach of children.
- **Before installing the range, you must locate and secure the included Anti-Tip Bracket Set for your range.**
- The use of a gas range leads to the formation of heat, moisture, and combustion effects in the room where the appliance is installed. It is recommended that the unit be operated with an overhead vented exhaust hood of sufficient size and capacity.
- Do not obstruct the flow of combustion air into the range and ventilation air away from the range.
- This appliance is not approved for downward airflow ventilation or air curtain equivalent. This type of ventilation system may cause ignition and combustion problems with this gas cooking appliance resulting in personal injury or unintended operation.
- The range may be installed flush to the rear wall. You may install a non-combustible material on the rear wall above the range and up to the vent hood. It is not necessary to install non-combustible materials behind the range below the countertop height.
- **WARNING: All openings in the wall behind the appliance and in the floor under the appliance shall be sealed.**

• The range must be installed on a clean, flat, even surface. The floor surface should not be combustible and should resist heat such as concrete or tile.

• Install the appliance so that the power cord or gas piping does not come into contact with any portion of the cooktop which may become hot during use.

• CAUTION: The use of cabinets for storage above the appliance may result in a potential fire hazard. Combustible items may ignite; metallic items may become hot and cause burns. If cabinet storage is to be provided, the risk can be reduced by installing a range hood that projects horizontally a minimum of 5" (12.7cm) beyond the bottom of the cabinets.

• The cabinetry and ventilation hood should be installed first to prevent damage.

• Make sure the wall coverings, countertop, and cabinets around the appliance can withstand heat up to 200º F (93°C) generated by the appliance.

• Deep fat fryers must not be installed directly next to gas cooktops. Gas flames can ignite splattering oil. A distance of at least 12in should be maintained between these two appliances.

•Ensure that the room is well ventilated by keeping the air intakes open and in good working order or by installing an extractor hood with discharge pipe. If the appliance is used intensively for a long time the effectiveness of the ventilation will have to be increased, for example by opening a window or increasing the power of any electric extractor fan.

• It is the responsibility of the installer to make certain that the appliance is properly adjusted at the time of installation. Situations caused by improper adjustments or improper installation are not covered under the warranty.

• Have the installer show you the location of the appliance gas shut-off valve and how to shut it off if necessary.

CLEARANCES AND VENTILATION

• The appliance should have proper ventilation in order to keep the unit operating properly and maintain the temperature of immediate surroundings within safe limits. Check your local building codes as they may vary from the general rules outlined in this guide.

• Observe all governing codes and ordinances. Do not obstruct flow of combustion and ventilation air.

• It is the installer's responsibility to comply with installation clearances specified on the model/serial rating plate.

• For proper operation of a gas appliance, the air necessary for the combustion of the gas must be able to flow into the room naturally. The air must flow into the room directly through openings in the outside walls. These openings must have an unobstructed cross-section not less than 2m3/h for each kw of power (see total power in kw on the appliance).

• This opening must be constructed so that it will not be obstructed from inside or outside, and not be constructed close to the floor. The opening is recommended to be on the side opposite to that on which the flue gases are discharged.

• The appliance should be located for convenient use in the kitchen.

• Recessed installations must provide complete enclosure of the sides and rear of the range.

WARNING: The minimum distances given in these installation instructions are to combustible surfaces, and it is the installers' responsibility that clearances are observed to ensure safe operation.

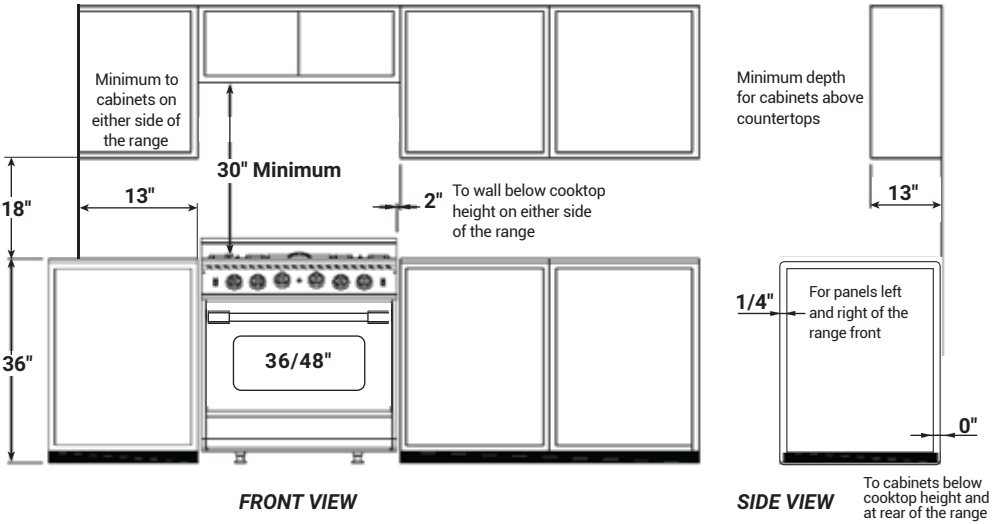

• The range may be installed flush to the rear wall. Install a non-combustible material on the rear wall above the range and up to the vent hood. It is not necessary to install non-combustible materials behind the range below the countertop height.

• The minimum vertical clearance between the appliance and combustible construction extending from the cooking surface is 30 inches.

• The minimum vertical clearance between the countertop surface and combustible construction above the appliance is 18 inches.

• The minimum distance from the side of the range above the countertop to combustible sidewalls must be at least 13 inches.

• The minimum horizontal distance between overhead cabinets installed to either side of the appliance shall not be less than the nominal width of the appliance.

• A floor-supported unit requires zero distance between adjacent combustible construction (sides and rear).

• Make sure the wall coverings, countertop and cabinets around the appliance can withstand heat up to 200º F (93°C) generated by the appliance.

• All opening in the wall or floor where appliance is to be installed must be sealed.

• Use an insulated pad or 1/4" (0.64 cm) plywood under range if installing range over carpeting.

WARNING: To avoid damage to your cabinets, check with your builder or cabinet supplier to make sure that the materials used will not discolor, delaminate or sustain other damage.

Installation in an island

• There must be a minimum of 6" (152 mm) clearance from the rear of the rangetop to a combustible rear wall unless otherwise specified in this manual for an approved backguard/high-shelf or for a rear wall protected by an approved non-combustible material. Clearances from non-combustible materials are not part of the ANSI Z21.1 scope and are not certified by CSA. Clearances to non-combustible materials must be approved by the authority having jurisdiction.
Clearances of less than 6" (152 mm) should be approved by local codes and/or the authority having jurisdiction.

Mobile Home – Additional Installation Requirements:

• The installation of this range in a manufactured (mobile) home must conform with 24 CFR Part 3280, Manufactured Home Construction and Safety Standards. Installation must also conform with 24 CFR Part 3285, Model Manufactured Home Installation Standards, and with local codes.

• When such standards are not applicable, the installation must conform with ANSI/NCSBCS A225.1 (Manufactured Home Installations) and NFPA 501A (current edition), or with local codes.

• In Canada, the installation of this range must conform with the CSA Z240 MH Series (Manufactured homes) (current edition), and with local codes.

• For installations in recreational vehicles (if applicable), installation must conform with NFPA 1192 (current edition) in the U.S., or the CSA Z240 RV Series / CSA Z240.4.2 (current edition) in Canada, and with local codes.

• For recreational park trailers / park model RVs, installation must conform with ANSI/RVIA A119.5 (current edition), or with local codes.

HOOD / COMPOSITE OVERLAY INSTALL

It is recommended that the unit be set under a powered, overhead, vented exhaust hood of sufficient size and capacity.

• To eliminate the risk of burns or fire by reaching overheated surface units, cabinet storage space located above the surface units should be avoided. If cabinet storage is to be provided, the risk can be reduced by installing a range hood or microwave hood combination with minimum 600 CFM that projects horizontally a minimum of 5" (12.7 cm) beyond the bottom of the cabinets.

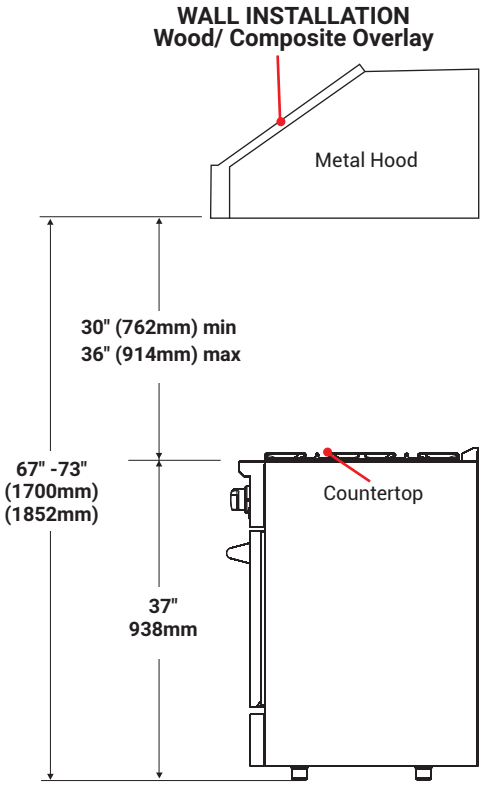

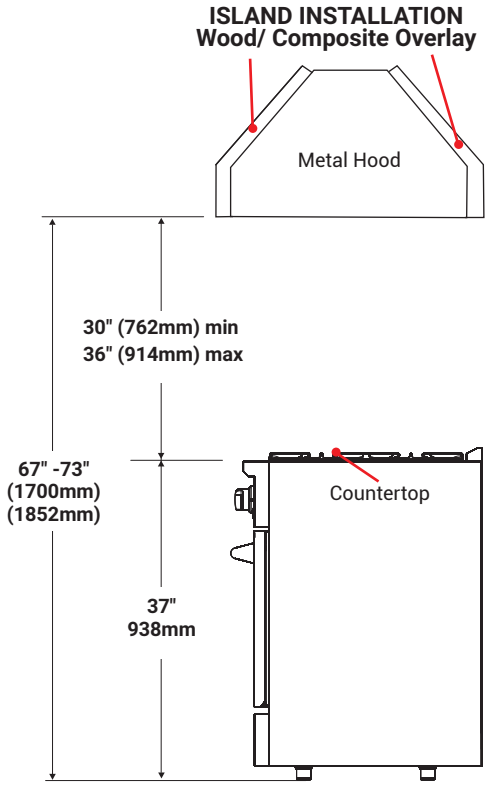

The bottom of the hood should be 30" minimum to 36" above the countertop. This would typically result in the bottom of the hood being 67" to 73" above the floor. These dimensions provide safe and efficient operation of the hood.

The range hood must be connected directly to flues or to the outside.

LEVELING

The Front Panel at the base of the range can be removed by unscrewing to access the 4 adjustable legs. Adjust the range to desired height by rotating the legs clockwise to raise and counterclockwise to lower. The range height can be raised 1.25" (30mm).

ELECTRIC POWER SUPPLY REQUIREMENTS

• Your range must be electrically grounded in accordance with local codes or, in the absence of local codes, in accordance with the National Electrical Code (ANSI/NFPA 70, latest edition). A copy of this standard may be obtained from the National Fire Protection Association.

• The power supply must be the correct polarity. Reverse polarity will result in continuous sparking of the electrodes, even after flame ignition. If there is any doubt as to whether the power supply has the correct polarity or grounding, have it checked by a qualified electrician.

• **Use 120V, 60Hz, properly grounded branch circuit protected by a 15-amp or 20-amp circuit breaker or time delay fuse.**

• A separate circuit, servicing only this appliance is required.

WARNING: Never use reductions, shunts, extension cords or adapters which can cause overheating or burning.

• Place the power outlet so that it is accessible after the appliance has been installed.

WARNING: Disconnect the appliance from the main power supply before installation or service.

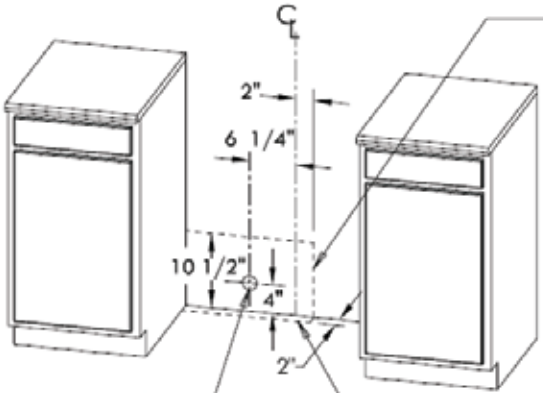

Area allows for flush installation with through-the-wall connection of pipe stub / shut-off valve and rear wall 120V outlet.

Shortest connection from hard pipe stub location to range hook-up.

Area allows for flush installation with through-the-floor connection of pipe stub / shut-off valve.

GROUNDING

• The power cord is equipped with a three-prong (grounding) plug which mates with a standard three-prong grounding wall receptacle to minimize the possibility of electrical shock hazard from the range.

• Any additions, changes or conversions required in order for this appliance to satisfactorily meet the application needs must be made by a qualified service technician in accordance with the manufacturer's instructions and all codes and requirements

of the authority having jurisdiction. Failure to follow the instructions could result in serious injury or property damage. The qualified agency performing this work assumes responsibility for the conversion

WARNING: DO NOT cut or remove the grounding prong from the power cord.

- Where a standard two-prong wall receptacle is encountered, it is the responsibility and obligation of the customer to have it replaced with a properly grounded three-prong wall receptacle by a licensed electrician.
- All cord connected appliances shall include instructions relative to location of the wall receptacle and a warning to the user to disconnect the electrical supply before serving the appliance.

WARNING: Make sure the AC Supply cable does not come in contact with any parts or components that get hot.

- The manufacturer is not liable for any direct or indirect damage caused by faulty installation or connection.

WIRING DIAGRAMS

36 Inch Series

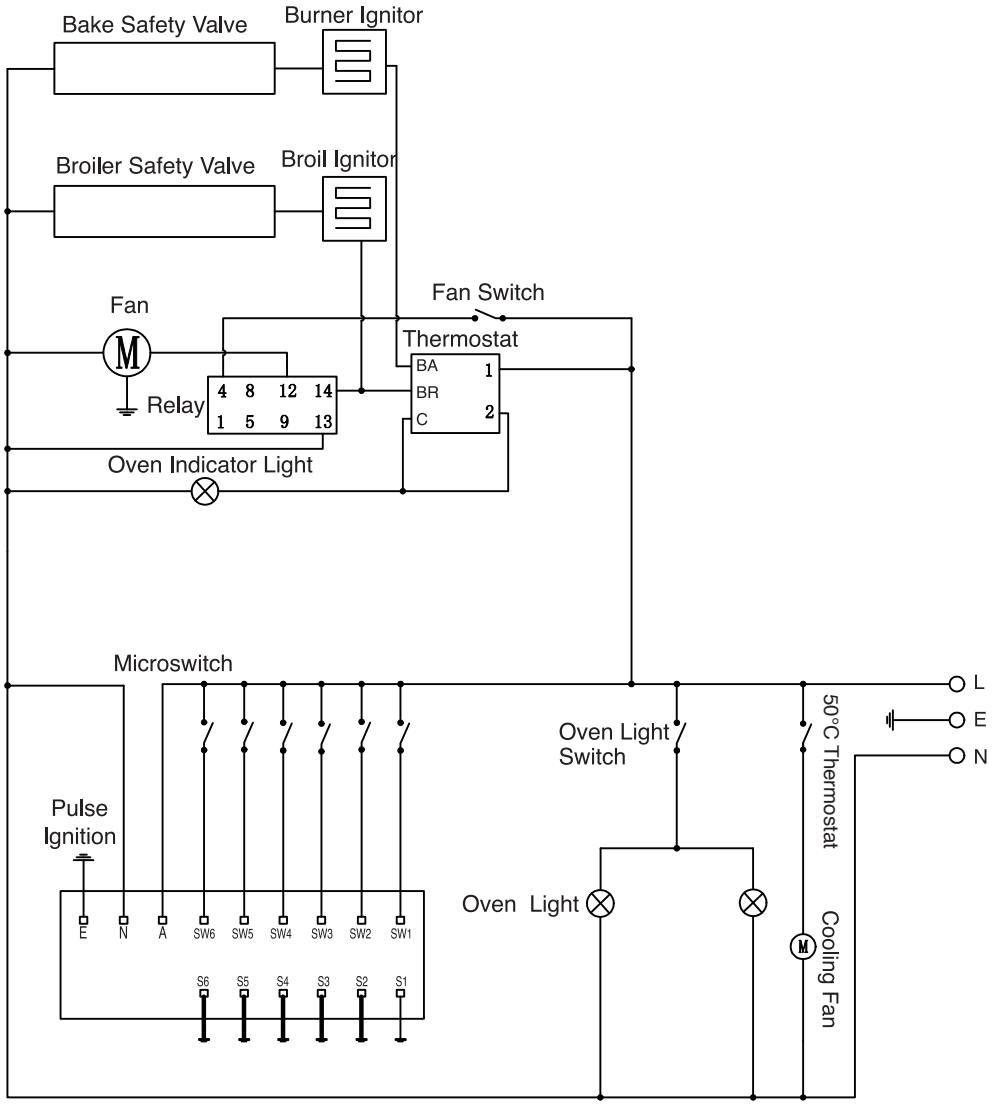

48 Inch Series

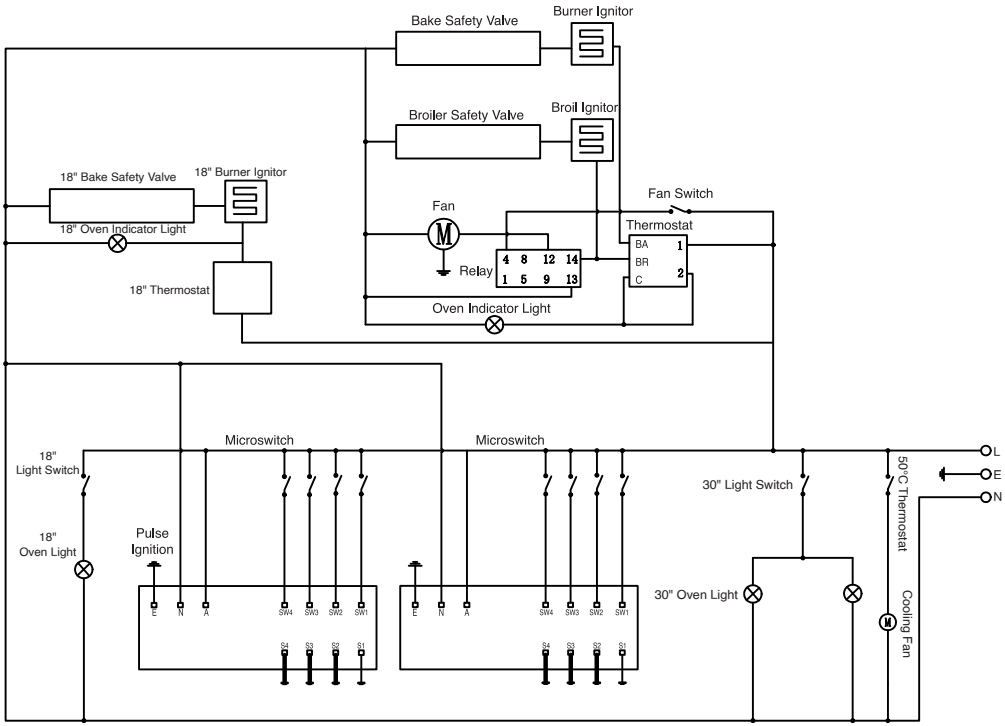

CAUTION: Label all wires prior to disconnection when servicing controls. Wiring errors can cause improper and dangerous operation. Verify proper operation before servicing.

GAS SUPPLY REQUIREMENTS

Explosion hazard conditions will exist unless you perform ALL of the following:

- **Installation and service must be performed by a qualified installer.**
- **Use a new CSA International approved gas supply line.**
- **Install a shut-off valve.**
- **Securely tighten all gas connections.**
- **The range has been equipped and adjusted for use with natural gas (NG) at manufacture.**

• For use with liquid propane (LP) gas, the range must be properly adjusted by a qualified installer. The appliance has been supplied with a liquid propane (LP) Conversion Kit. Each orifice has been clearly identified on the orifice packaging to identify with which burner it corresponds with. Refer to the 'PARTS' section of this manual for a table listing orifice sizing, according to your gas range model.

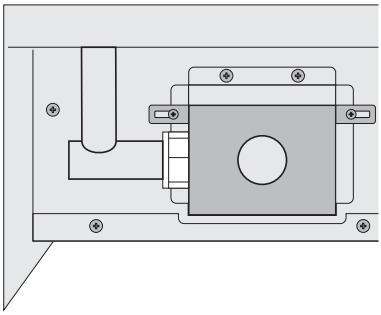

• Ensure the gas appliance pressure regulator has been set for the gas which the appliance will use. The gas appliance pressure regulator is located at the bottom right, rear of the range.

• Installation of this range must conform with local codes, or in the absence of local codes, with the National Fuel Gas Code, ANSI Z223.1/NFPA 54 (current edition).

In Canada, installation must conform to CSA B149.1, Natural Gas and Propane Installation Code (and where applicable, CSA B149.2, Propane Storage and Handling Code), and to local codes where applicable.

• A statement of the maximum gas supply pressure in accordance with the inlet pressure rating of the gas appliance pressure regulator supplied.

MINIMUM GAS SUPPLY PRESSURE TO APPLIANCE FOR NATURAL GAS (NG) – 6.0 IN.W.C.

MINIMUM GAS SUPPLY PRESSURE TO APPLIANCE FOR LIQUID PROPANE GAS (LP) - 11.0 IN.W.C.

MAXIMUM ALLOWABLE GAS SUPPLY PRESSURE TO APPLIANCE (NG OR LP) – 14.0 IN. W.C.

THIS RANGE IS FACTORY-SET FOR USE WITH NATURAL GAS. APPLIANCE REGULATOR IS SET AT 5.0 IN. W.C. OUTLET PRESSURE.

CONNECT RANGE TO GAS SUPPLY

IMPORTANT: The range must be connected to a regulated gas supply. The pressure regulator located at the inlet of the appliance manifold must remain in the supply line regardless of Natural (NG) or Liquid Propane (LP) gas is being used. The supply line must be equipped with an approved external gas shut-off valve located near the range in an accessible location. Do not block access to the shut-off valve.

• The appliance should be connected to the supply line with 1/2-inch black iron pipe or a certified flexible type stove connector.

• A flexible metal appliance connector used to connect the appliance to the gas supply should be 3 feet/91.4 cm max. in length for easy installation. In Canada, flexible connectors should be single wall metal connectors less than 6 feet/182.9 cm in length.

• All connections to the gas piping must be wrench-tightened. Do not overtighten or allow pipes to turn when tightening.

• Any pipe connections must be made using a thread sealant approved for gas connections. Failure to correctly install these items could lead to a gas leak and subsequent explosion.

1. Shut off the main gas supply valve before removing the old cooking appliance (if applicable) and leave it off until the new hook-up has been completed. Don't forget to relight the pilots on other gas appliances when you turn the gas back on.

2. Install male ½" flare union adapter to ½" NPT internal thread elbow at inlet of regulator. On models equipped with standard double burners, install the male pipe thread end of the ½" flare union adapter to the ½" NPT internal thread at inlet of pressure regulator. Use a wrench on the regulator fitting to avoid damage.

3. Install male ½" or ¾" flare union adapter to the NPT internal thread of the manual shut-off valve, taking care to secure the shut-off valve to keep it from turning.

• The gas supply pressure for checking the regulator setting is **7" W.C.** (Natural Gas) and **11" W.C**. (LP Gas). Connect a flexible gas line connector to the regulator on the range. Position the range to permit connection at the manual shut-off valve.

4. When all connections have been made, check that all range controls are in the 'OFF' position and open the main gas supply valve.

5. Leak testing of the appliance shall be conducted according to the manufacturer's instructions. Use some soapy water (50% water and 50% liquid detergent) or a leak detector at all joints and connections to check for leaks in the system. Open the valve and check for leaks by placing the liquid solution onto all gas connections. Bubbles around connections indicate a gas leak. If a leak appears, close the

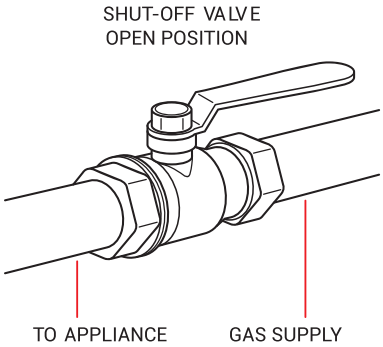

Gas shut-off valve

shut-off valve, and adjust connections. **Do not use a flame to check for gas leaks.**

• Tighten all connections if necessary to prevent gas leakage in the appliance or supply line.

• Check alignment of control knob valves after connecting the appliance to the gas supply to be sure the appliance manifold pipe has not moved. A misalignment could cause the valve stems to rub on the control panel, resulting in a gas leak at the valve.

• The appliance must be isolated from the building's gas supply piping system by closing its individual manual shut-off valve during any pressure testing of the gas supply piping system at test pressure equal to or less than ½ psi (3.5kPa).

LIQUEFIED PETROLEUM (PROPANE) GAS CONVERSION (Optional)

This appliance can be used with Natural Gas or LP/Propane Gas. It is shipped from the factory for use with Natural Gas. A kit for converting to LP gas is supplied with your appliance.The kit is marked Liquid Propane Gas Conversion Kit.

WARNINGS:

• Please make sure to read ALL safety precautions.

• Failure to make the appropriate conversion after Step 5 of 'Connect Range to Gas Supply' can result in serious personal injury and property damage. Conversion must take place before installing the anti-tip brackets.

• The conversion must be performed by a qualified service technician in accordance with the kit instructions and all local codes and requirements. Failure to follow instructions could result in serious injury or property damage. The qualified agency performing this work assumes responsibility for the conversion.

1. When the appliance is converted to Liquid Petroleum (LP) Gas, the LP gas supply is required to provide a minimum of 11.0" W.C. and to a maximum of 14.0" W.C. to the appliance regulator.

Following LP Gas Conversion, complete steps: “Adjusting the Regulator Pressure”; “Changing Burner Orifices”; “Adjusting Burner Flames”; and “Testing Flame Stability”.

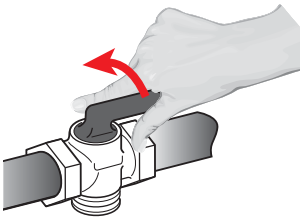

Adjusting the Regulator Pressure

2. Shut off the gas supply to the appliance by closing the manual shut-off valve. Disconnect electrical power to the appliance before servicing. Do not remove regulator or allow it to turn during servicing.

3. Unscrew the regulator cap with a wrench.

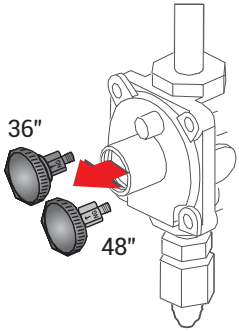

4. Remove retainer pin by pulling it out.

5. Reverse the retainer pin and snap it back into the regulator cap.

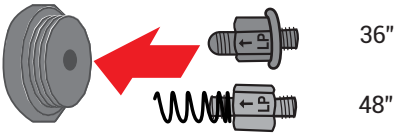

6. Screw the regulator cap back into the regulator and re-attach it to the nipple and flare union as shown.

DO NOT over-tighten.

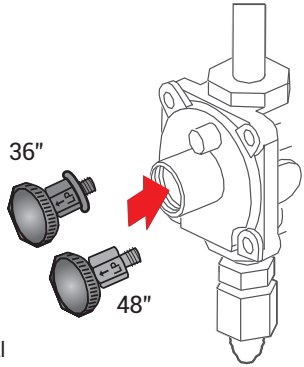

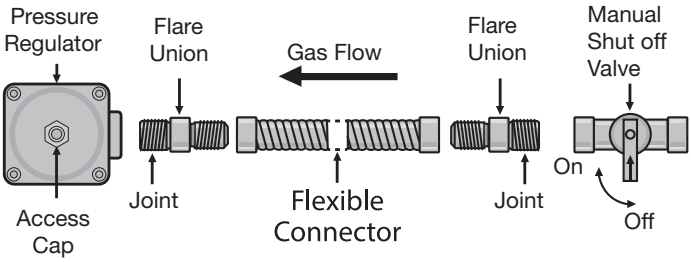

Changing Burner Orifices

IMPORTANT: Each orifice has a number indicating its flow diameter printed on the body. Install the proper orifices in the exact locations as noted in the following tables corresponding to your model.

36 Inch Series

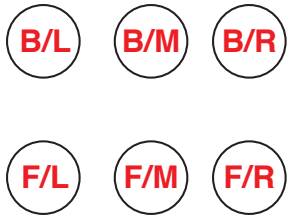

BURNER	NG ORIFICE	LG ORIFICE	INPUT (BTU/H)
Back Left (B/L)	1.36	0.90	9,000
Front Left (F/L)	1.79	1.16	15,000
Back Middle (B/M)	1.36	0.9	9,000
Front Middle (F/M)	1.07	0.74	6,000
Back Right (B/R)	1.57	1.0	12,000
Front Right (F/R)	1.36*2+0.73	0.89*2+0.53	20,000
Convection Oven	2.13	1.40	22,000
Broil	1.42	0.94	10,000
TOTAL			**103,000**

48 Inch Series

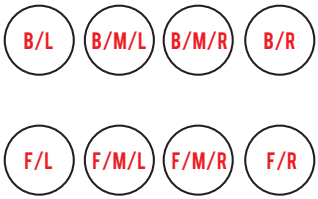

BURNER	NG ORIFICE	LG ORIFICE	INPUT (BTU/H)
Back Left (B/L)	1.36	0.9	9,000
Front Left (F/L)	1.07	0.74	6,000
Back Middle Left (B/M/L)	1.57	1.0	12,000
Front Middle Left (F/M/L)	1.36*2+0.73	0.89*2+0.53	20,000
Back Middle Right (B/M/R)	1.36	0.9	9,000
Front Middle Right (F/M/R)	1.07	0.74	6,000
Back Right (B/R)	1.57	1.0	12,000
Front Right (F/R)	1.36*2+0.73	0.89*2+0.53	20,000
Oven 1 (Left)	1.68	1.09	14,000
Convection Oven 2 (Right)	2.13	1.40	22,000
Broil	1.42	0.94	10,000
TOTAL			**140,000**

INSTALLATION TIP: To prevent any omissions, remove ALL existing Natural Gas orifices before replacing them with the LP orifices.

7 Remove the burner grates, burner caps and burner rings. Using a 7mm nut driver, remove ALL the existing Natural Gas burner orifices/nozzles. Carefully read and observe each orifices label for correct location (DO NOT force or over-tighten orifices as doing so will damage the burner base and affect the flame).

8. Shut off the gas supply to the appliance by closing the manual shut-off valve (see step 2.)

Disconnect electrical power to the appliance before servicing. Do not remove regulator or allow it to turn during servicing.

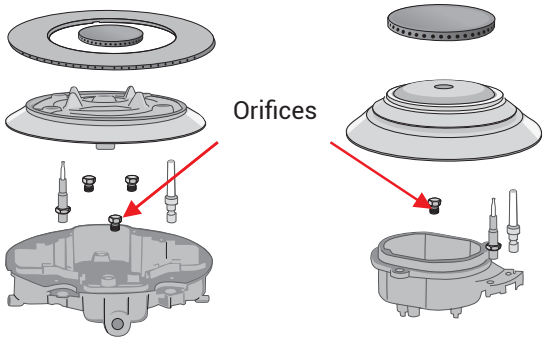

Double Ring Burners
3 Orifices

Auxiliary Burner
Semi-Rapid Burner
Rapid Burner 1 Orifice Each

WARNINGS:

Save the natural gas orifices removed from the appliance for possible future conversions to natural gas. You should use the following process to convert to Natural gas. Take extra care when handling steel parts.

WARNINGS:

Care should be taken when removing and replacing gas components. Use proper support to prevent damage to components.

Changing Oven Orifices

9. Open the oven door and remove the bottom drip pan and sliding racks.

10. Remove the upper burner screw. Remove the burner from its connection against the back wall of the oven. Be careful not to scratch or damage the connection wire that will remain connected throughout this procedure.

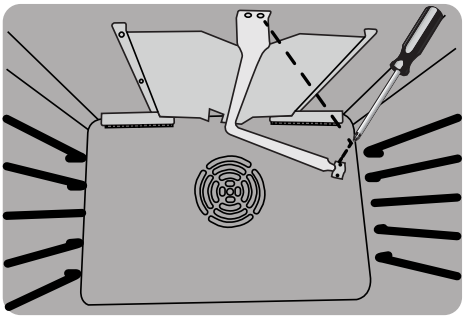

11. Using a 10 mm socket wrench, remove the orifice. Set the natural gas orifice aside and replace with the liquid propane gas orifice. Screw in and tighten the new orifice.

12. Place the burner vent back into position over the new orifice in the AR3 slot.

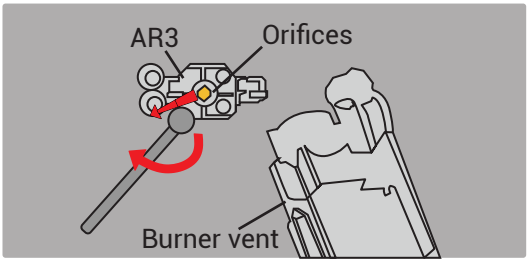

13. Secure the burner back in place with the mounting screw that was removed in step 10.

14. Follow steps 10 through 13 with the bottom burner. Ensure the orifices and burners are secured properly. When finished, replace drip pan and sliding racks.

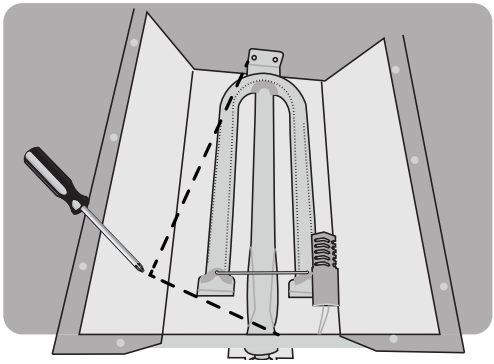

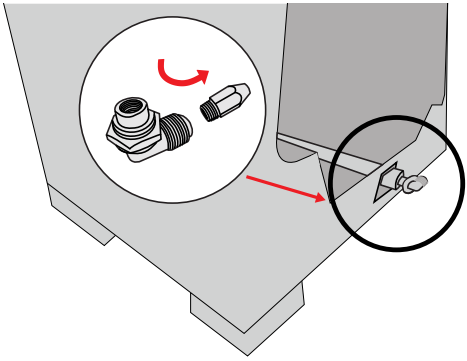

Adjusting the Burner Flames

15. Ensure electricity and gas are switched on. Turn all burners to their highest settings. Flames should be blue in color (LP gas flames may have yellow tips). Foreign particles in the gas line may cause an orange flame at first, but this will soon disappear.

16. Check each cooktop burner for proper low flame: Push and turn burner knob to Low; the flame size should be 1/4" to 3/8" (0.64 cm to 0.95 cm) high.

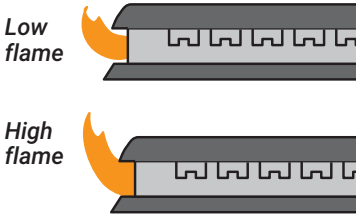

17. Set two other burners to “Medium”. This will prevent the upper row of flames from being set too low resulting in the flame being extinguished when the other burners are turned on.

18. To adjust the flame, remove the knobs; insert a 3/32 screwdriver through the access hole to engage the brass slotted screw as shown. Slowly turn the screw clockwise to lower the flame and counter-clockwise to increase the flame.

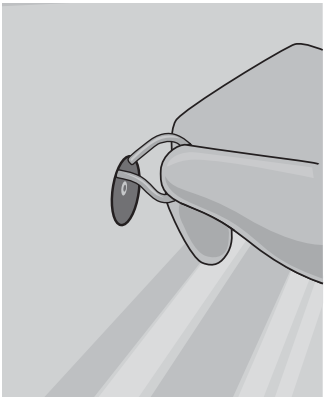

Note: If burner does not stay ignited at low setting, return burner knob to “OFF” position then push and turn burner knob to Medium setting and adjust the flame slightly higher. Return burner knob to “OFF” position then re-check flame height at Low setting.

Testing Flame Stability (PROPANE)

19. **Test 1:** Turn a burner knob from High to Low quickly. If the upper row of flames goes out at this setting, increase the flame size and test again. Repeat for all burners.

Test 2: With a burner knob set to Low, open and close the cabinet door under the appliance. If the flame is extinguished by the air currents created by the door movement, increase the flame height and test again. Repeat for all burners.

20. After the adjustment is made, turn all burners off. Ignite each burner individually. Observe the flame with each burner knob in the High position. Rotate the knob to the lowest setting and make sure that the flame size decreases as the knob is rotated counter-clockwise.

Adjust the height of top burner flames. When a burner knob is set to Low, the burner flame should be a steady blue flame approximately 1/4" (0.64 cm) over burner cap.

WARNINGS:

Once the conversion has been completed and has passed testing, it is recommended to write your name, organization and conversion date on a sticker. Apply the sticker near the appliance gas inlet opening to alert others in the future that this appliance has been converted. If converting back to Natural Gas, please remove the sticker so others know that the appliance is set to use its original gas.

ANTI-TIP BRACKET

To prevent the range from tipping forward, the anti-tip brackets must be installed. Failure to install the Anti-Tip Bracket will allow the range to tip over if excessive weight is placed on an open door or if a child climbs upon it. Serious injury might result from spilled hot liquids or from the range itself.

WARNING: DO NOT OPERATE THE RANGE WITHOUT THE ANTI-TIP BRACKETS IN PLACE. IF THE APPLIANCE IS ACCIDENTALLY TIPPED, THE WEIGHT OF THE RANGE MAY CAUSE SERIOUS INJURY.

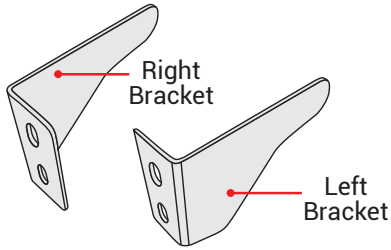

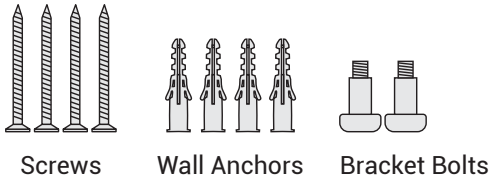

There are Two Tip-Over Brackets which are to be installed at the back of the range, on the left and right sides.

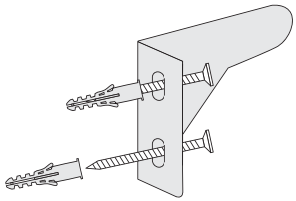

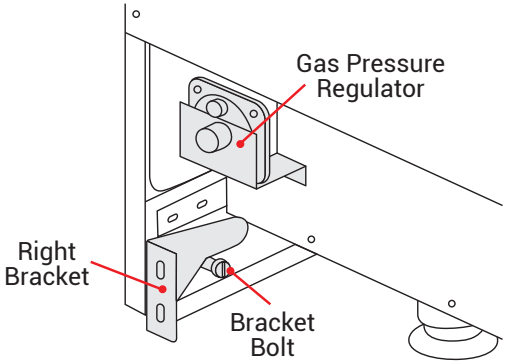

1. At the back of the range, insert and tighten a Bracket Bolt into the reinforced hole at the bottom of the right-side panel.
2. Affix the Right Bracket into the wall behind the range using 2 Wall Anchors and 2 Screws and positioning the bracket so that it will line up on top of the Bolt to engage.
3. Repeat steps 1 and 2 for the Left side of the range.
4. Safely tilt the front of the range upward slightly and slide the range back towards the two brackets on the wall, so that the brackets engage.
5. Try to slide the range forward slightly to verify the Anti-Tip device has been properly installed. The range should not tip more than 4 inches from the wall if correctly installed. **CAUTION: Do not tip the range more than 4 inches from the wall as it could tip over and cause injury.**
6. **Ensure the anti-tip device is re-engaged when this appliance is moved.**
   WARNING: Never completely remove the leveling legs or else the range will not be properly secured to the anti-tip device.

COMPONENT PART ASSEMBLY

BURNER ASSEMBLY

1. Align the small ignitor hole/indentation of the Burner Head to fit around the Igniter and place on the Burner Base.
2. Center the Burner Cap/s on top of the Burner Head. The Burner Cap must be in a flat, horizontal position.

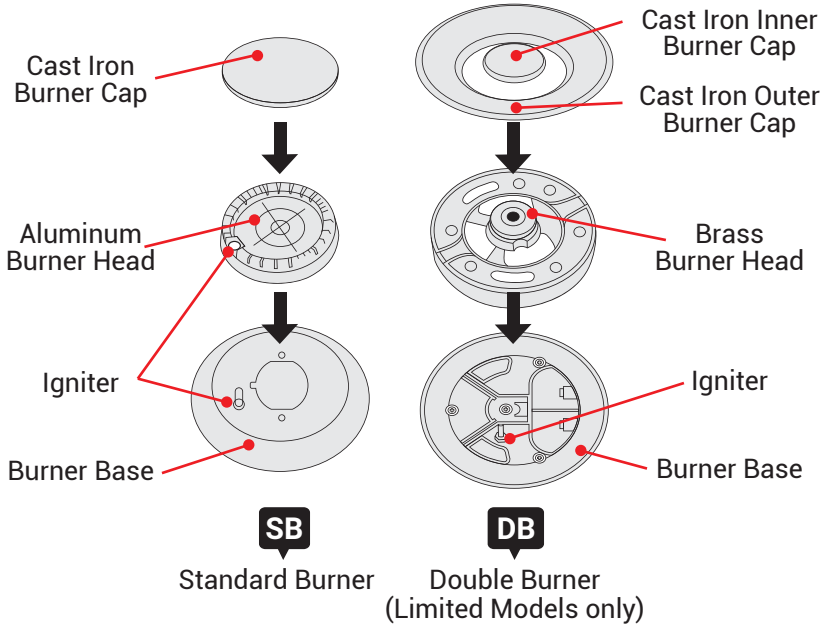

WARNING:

Always keep the Burner Caps in place when using the burners.

WARNING: It is important to install the Burner parts in the correct order. Incorrect assembly could cause flames or gas to escape or burn between parts, resulting in poor combustion or damage to your range top.

36 Inch Series

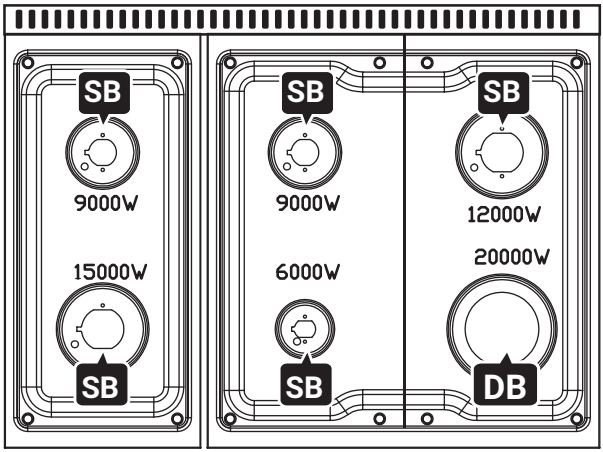

48 Inch Series

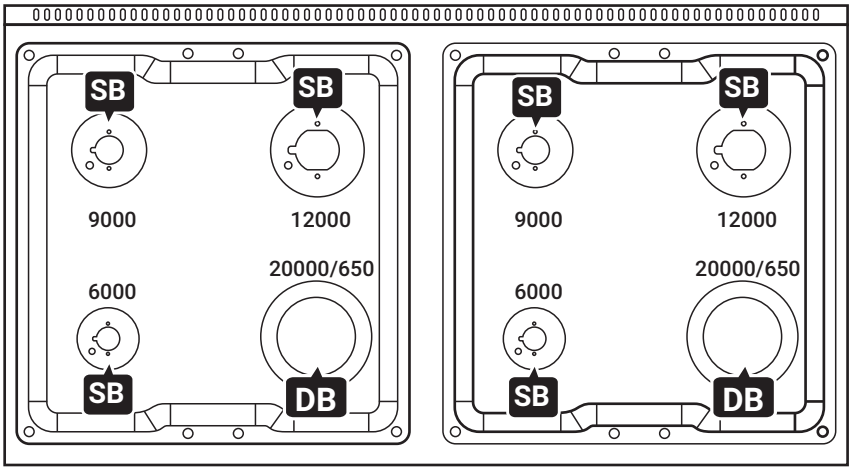

BURNER GRATES

- Secure the grates vertically, side-by-side on top of the burners.
- For 30 Inch models, insert the Center Grate in the middle of the 2 larger Burner Grates.
- Improper installation of the grates may result in scratching of the cooktop and/or poor combustion.
- Always use the Burner Grates, and never place cookware directly on the Burners.

GRIDDLE

Applicable for limited models

The Griddle can be placed on the range cooktop on top of any one of the Burner Grate positions.

The griddle is reversible, such that both sides, flat and ridged can be heated. Ensure the grease trap is positioned toward the front of the range, rather than toward the Top Vent.

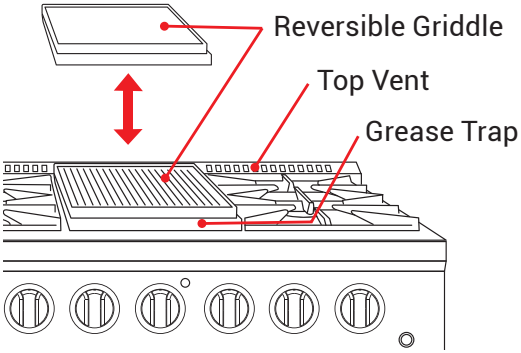

OVEN RACKS & TELESCOPIC RAILS

Caution: Ensure the oven is completely cool before adjusting or removing oven accessories.

Each oven cavity is equipped with two heavy-duty Oven Racks and two sets of Telescopic Tails (a left rail and a right rail for each rack). That is, a total of four telescopic rails per oven.

Rack Positions

- Each oven cavity includes five rack guide positions.
- Oven racks can be placed directly on the oven rack guides or mounted on the telescopic rails.
- When mounting on the telescopic rails, fully slide out the rail first to secure the oven rack.
- Always ensure oven racks are level and fully supported before placing cookware.
- Use the opening at the front of the oven rack to assist with the removal (together with an oven mitt).

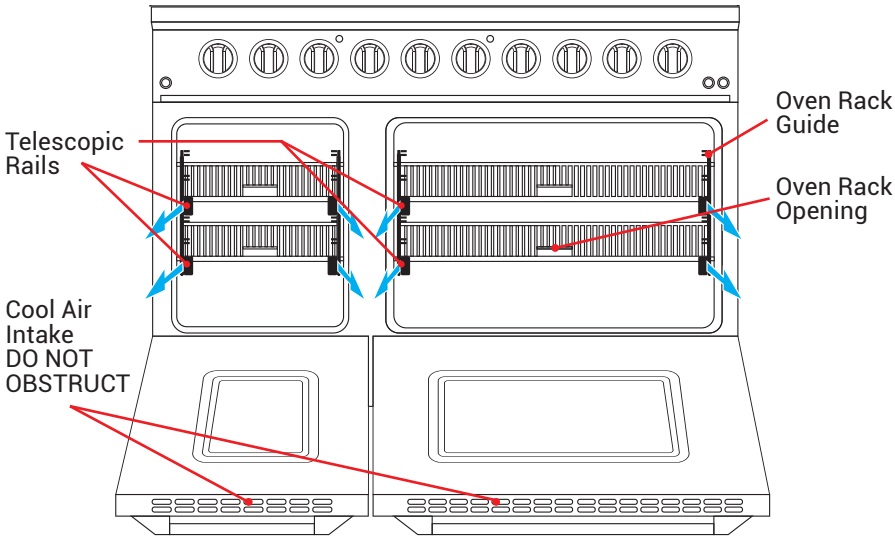

Adjusting Telescopic Rails

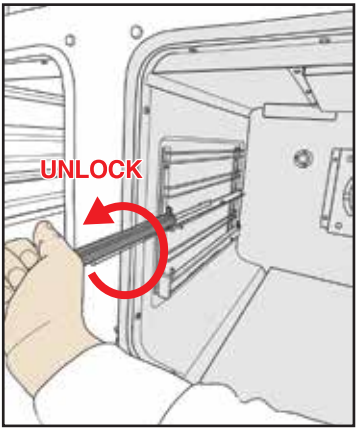

1. Fully extend the telescopic rails, left and right.
2. Remove the oven rack from the telescopic rail.
3. To adjust the **left rail:**
   - Hold the rail end firmly.
   - Rotate the rail counterclockwise to release it from the Oven Rack Guide.
   - Reposition the rail at the desired height.
   - Reattach to the Oven Rack Guide and rotate clockwise until secured.
4. To adjust the **right rail:**
   - Hold the rail end firmly.
   - Rotate the rail clockwise to release it from the Oven Rack Guide.
   - Reposition the rail at the desired height.
   - Reattach to the Oven Rack Guide and rotate counterclockwise until secured.
5. Verify both rails are properly secured before reinstalling the oven rack.

BURNER KNOB REPLACEMENT

Some Gas Range models include an alternative set of Burner Knobs that can be used to replace the original knobs based on personal preference.

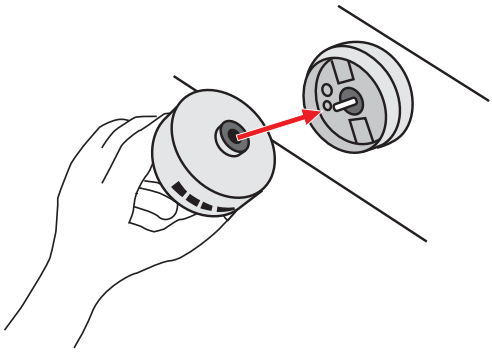

1. To remove the original knobs, pull firmly until the knob is released from the control panel.
2. To attach replacement knobs, align the hole of the knob with the pin on the control panel and push on firmly.

36 Inch Series

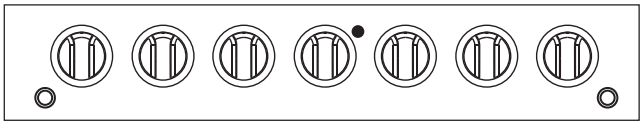

A A A **C** A A **B**

(**A**) Standard Burner HI – SIM

(**B**) Double Burner HI – LO – SIM

(**C**) Oven Burner 150-500 BROIL

48 Inch Series

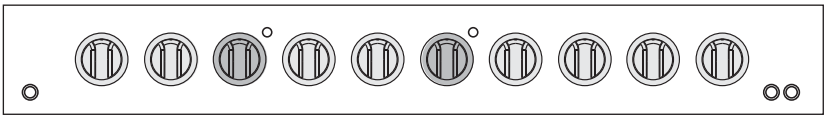

A A **C** A **B** **D** A A A **B**

(**A**) Standard Burner HI – SIM

(**B**) Double Burner HI – LO – SIM

(**C**) Small 18" Oven 150-450

(**D**) Large 30" Oven 150-500 BROIL

OVEN HANDLE REPLACEMENT

Certain Gas Range models include an extra Oven Handle in an alternative color, which can be used to replace the original handle based on personal preference.

HOW TO REPLACE HANDLE

1. Locate the Hex Key tool that came with the replacement handle.

2. Remove the existing handle on the oven door by using the Hex Key to loosen the two interior screws.

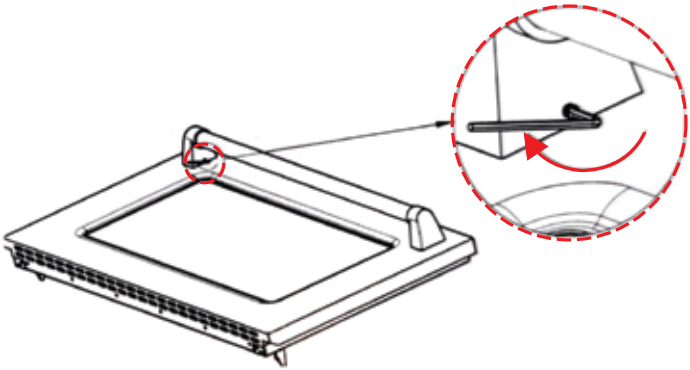

3. To install the Replacement Handle, first align the end caps of the handle so that the screw holes are lined up. Add screw to affix the end caps and tighten until secure, with a Phillips screwdriver.
Important: Do not overtighten, as the screws may fall through.

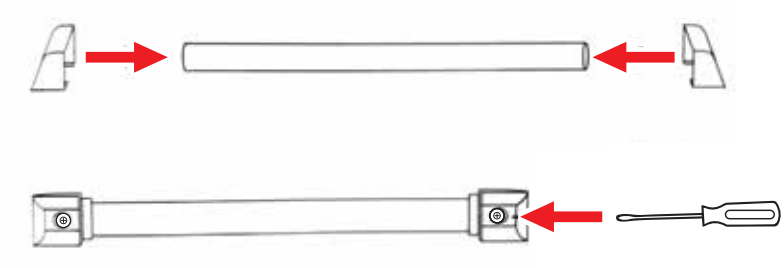

4 Use the Hex Key to loosen the second set of screws.

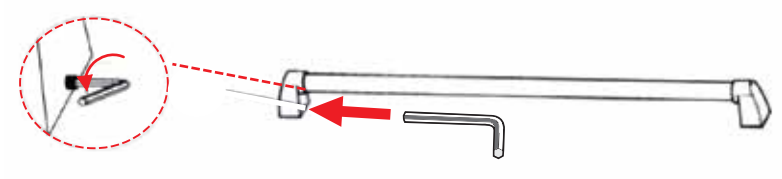

5 Align the assembled handle with the holes on the oven door

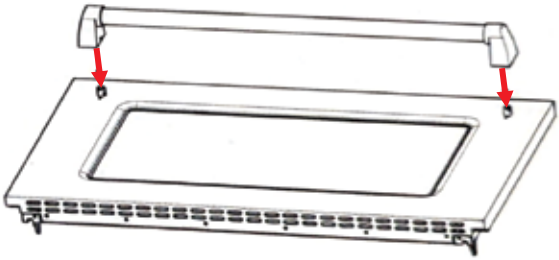

6 Use the Hex Key to tighten both screws until the handle is secure.

BEFORE FIRST USE

CLEAN

- Remove any packaging and protective films, including cable ties on the oven racks.
- Remove any residue oil or grease from the manufacturing process:

COOKTOP: Wash the removable parts (Burner Grates, Griddle, Burner Caps and Burner Heads) of the cooktop in a mild solution of warm water and liquid dish soap. Dry thoroughly. Wipe the cooktop surface with a damp cloth and dry thoroughly. Assemble the burner parts in the correct order. (See 'COMPONENT PART ASSEMBLY'.)

OVEN: Wash the oven racks in a mild solution of warm water and liquid dish soap and dry. Wipe down the interior of the oven and the Oven Rack Guides with a clean damp cloth. Dry thoroughly before installing the parts. (See 'COMPONENT PART ASSEMBLY'.)

IMPORTANT: The oven and broiler should be turned on to burn off the manufacturing oils. Turn the Oven to 450°F for 20 to 30 minutes. Then turn the Oven to 'BROIL' for the same length of time. You may wish to turn on the ventilator above your range at this time. Turn the oven off and allow to cool with the door closed.

CHECK

- Once the gas and power are connected, check that all range controls are in the "off" position and turn on the main gas supply valve.
- Check for gas leaks at all gas connections (using a gas detector, never a flame).
- Check ignition of cooktop burners.
- Check the flame. When properly installed, the flame will be steady and quiet and approximately 1" in height.

When burning natural gas (NG), the burner flames should be sharp and almost completely blue with possibly a small hint of yellow in the center of the flame as seen in figure 'A'.

When burning liquid propane (LP), the flames will usually have a yellow tip as seen in figure 'B'.

If the flame is mostly yellow in color as seen in figure 'C', this indicates a problem. Discontinue use and seek assistance from a licensed gas service. Note: foreign material in the gas line may cause an orange flame during initial operation.

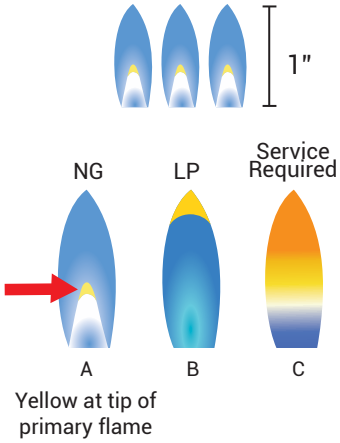

• Check ignition of oven burner.

• Visually check heating elements of the oven. Carefully lift the panel on the interior floor of the oven. Turn on the oven to check the heating element heats fully. Turn off the oven and allow to cool before returning the floor panel.

• Visually check the broil heating element.

• Check operation of the convection fan.

IMPORTANT:

• Metal components have a protective coating which may give off a slight odor the first time your new appliance is heated.

• The harmless odor will dissipate after a short time and does not indicate a faulty connection or appliance defect.

COOKTOP OPERATION

BEFORE USING BURNERS

• Select the cookware to match the burner. (Large Diameter = Large Burner, Small Diameter = Small Burner)

• Using oversized cookware may cause the flames to spread out and may cause damage. The proper cookware size will also improve efficiency.

• Cookware with a smaller diameter than the grate will not sit correctly, and this creates a spillage hazard.

• Only use heat-resistant cookware, marked safe for gas cooktops.

• Thick cookware bases will give more even results, as hot spots are reduced due to better heat distribution. Thin cookware bases will conduct heat faster but not as evenly as thick cookware. Stir the food frequently to prevent burning.

• **Always place the cookware on the grate. The cookware must not be placed directly on the burner.**

• Use the following table as a guideline to which style burner is suitable for which cooking style:

Burner Type	Very High-High	Medium	Low
DOUBLE FLAME	Boiling, steaming, toasting, paellas, stir-fry	Reheating and keeping things hot: cooked and precooked dishes	
RAPID	Escalopes, steaks, omelets, frying	Rice, white sauce, ragout	Steaming: fish, vegetables
SEMI-RAPID	Steamed potatoes, fresh vegetables, vegetable stews, pasta	Reheating, keeping things hot and making casseroles	
AUXILIARY	Cooking: casseroles, rice pudding, caramel	Defrosting and slow cooking: vegetables, fruit and frozen products	Melting: butter, chocolate, jelly

Note: Not all models have all burner types. Refer to the table listed under 'Parts' for burner descriptions of your model gas range.

COOKTOP BURNER IGNITION

1. To light the surface burners, push and turn the corresponding Burner Control Knob **counterclockwise** to the **'HI'** position. You will hear a clicking noise – the sound of the electric spark igniting the burner.

   IMPORTANT: When one burner is turned to the 'HI' position, all the burners will spark. Do not touch any burner cap, burner base, or igniter while the igniters are sparking. Do not attempt to disassemble or clean around any burner while another burner is on.

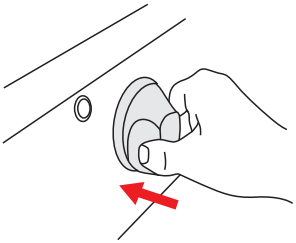

2. When a flame is visible, keep the Burner Control Knob pressed and continue to turn the knob **counterclockwise** to adjust the flame size. If the knob stays at 'HI', it will continue to click.
   The burner can be continuously regulated between highest and lowest flame.

   Note: The outer flame of the Double Burner will go out when the Burner Knob is rotated to simmer (SIM). Rotate clockwise to re-ignite the outer flame.

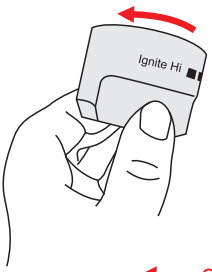

3. To turn **OFF**, turn the Burner Control Knob **clockwise** back to the dot/off position. The gas supply will stop and the flame will go out.

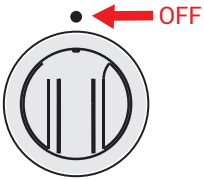

• If the flame goes out prematurely while trying to ignite, turn the Burner Control Knob clockwise to the off position. Wait at least 5 minutes for any gas to dissipate before attempting to reignite. You may have to keep the Burner Control Knob pressed a little longer.

• The Range has an **Auto-Reignition feature** to accommodate for situations where the flame goes out due to external causes such as a draft or door slamming. The burners will automatically spark to reignite the flame, preventing gas leaking inadvertently.

IMPORTANT: The appliance can be damaged if you:

- turn the knob without pushing in
- turn clockwise to turn on
- turn counterclockwise to turn off

TURNING ON IN THE EVENT OF A POWER FAILURE

If there is a power loss, you can ignite the flame manually, e.g., with a utility lighter.

1. Push in the Burner Control Knob and turn counterclockwise to the 'HI' position.
2. Keep the Knob pushed in and ignite the escaping gas-air mixture with a utility lighter (that is a minimum 6" in length).
3. When lit, keep pushed in and turn the knob to the desired setting.

IMPORTANT: If the flame is blown out during a power failure, turn the knob immediately to OFF, as the burner will not automatically relight and gas may escape.

FLAME REGULATION

Once the flame is ignited, rotate the Burner Control Knob to regulate the flame.

• To **reduce** the flames from a high to a low setting, push the corresponding knob in and turn **counterclockwise.**

• To **increase** the flames from a low to a high setting, push in and turn the Burner Control Knob **clockwise.**

• A smaller flame will give the best simmer results. Small flames offer precise cooking performance for delicate foods, keeping food warm, melting chocolate or butter, and for cooking that needs to cook over low heat for a long time.

• The highest (larger) flame settings provide the maximum heat that is available on your range. This setting should be used for heavy cooking loads such as water boiling and pasta cooking.

• The flame should be regulated so that it never protrudes beyond the cookware. Since the outer part of the gas flame is much hotter than the center of the flame, the flame tips should remain under the base of the cookware. Protruding flame tips give off unnecessary heat into the air and can damage pot handles and increase the risk of burning.

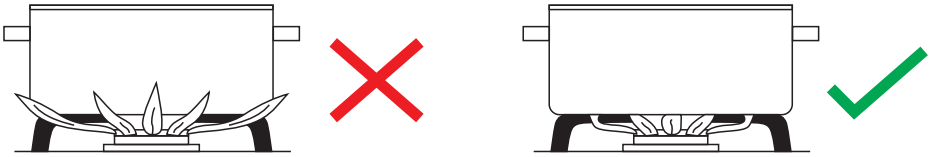

ENERGY SAVING TIPS

• If possible, cook in covered pots or pans. This prevents unnecessary heat loss.

• Cook with less water.

• After cooking or frying, promptly set to a lower flame.

• Generally, wide/shallow pans will heat quicker and cook more evenly than narrow/tall ones.

WARNING: NEVER USE THIS APPLIANCE AS A SPACE HEATER TO HEAT OR WARM THE ROOM. DOING SO MAY RESULT IN CARBON MONOXIDE POISONING AND OVERHEATING.

GRIDDLE OPERATION

Certain Gas Range models come accessorized with a Porcelain Enameled Cast Iron Double-Sided Griddle.

The Griddle offers a versatile cooking surface to cook many food items and allows for easy flipping with no side edges. The **flat side** is perfect for pancakes, bacon, eggs, French toast, hash browns, and hamburgers, while **the grooved side** it perfect to sear or char meats such as steaks or sausages.

1. Place the Griddle on top of any one of the three Burner Grates, with preferred cooking surface facing upwards.
2. To heat the Griddle, ignite the two burners that sit beneath the Griddle. (It is possible to light only one for smaller food portions).
3. Prior to cooking, add vegetable oil or another shortening to the Griddle. This will prevent sticking.
4. As the griddle is Cast Iron, it will require preheating (approx 10-12 mins). Use a **Low to Medium flame setting.** The cast iron properties will heat up slowly and will stay warm, so high heat is typically not required. If you do need to use high heat, lower the setting once the desired heat has been reached.
5. When finished and the Griddle is still hot, scrape grease into the grease collection trap after use.
6. Clean the Griddle. See 'CLEANING' instructions.

Note: The Griddle can be placed in the oven and is safe to use up to 500°F.

WARNING: Use wooden, silicone, or heat-resistant nylon utensils to avoid scratching the surface of the Griddle. Never cut food directly on the Griddle.

CAUTION: The surface of the Griddle is hot after use. Please allow sufficient time for the Griddle to cool prior to cleaning.

OVEN OPERATION

BEFORE USING THE OVEN

When using the appliance for the first time, the oven and broiler burners should be turned on to burn off any manufacture oils. See 'BEFORE FIRST USE' for further details.

WARNING: Oven Vent

Do not block the Top Vent of the range, nor the ducts of the door for cool air intake and exhaust. It is important that the flow of hot air from the oven and fresh air into the oven burner never be interrupted. Avoid touching the vent opening or nearby surfaces during oven or broiler operation – they may become hot.

WARNING: Oven Internal Air Flow

Never cover any slots, holes or passages in the oven bottom or cover an entire rack with materials such as aluminum foil. Doing so blocks air flow through the oven and may cause carbon monoxide poisoning.

WARNING: Aluminum Foil

Do not use aluminum foil or other material to line the oven floor or side walls or any other porcelain surface. Failure to adhere to this notice will damage the porcelain interior. Further, the aluminum foil traps heat and may create a fire hazard.

OVEN FUNCTIONS

CONVENTIONAL / NATURAL AIR FLOW

The ovens operate as a conventional oven where heat is transferred into the oven from the heating element in the bottom of the oven cavity. Heat is then circulated by natural airflow. This is a traditional bake setting.

Conventional cooking is best for less tender cuts of meat that should be covered, covered one-dish recipes, and pizzas.

To prevent any issue with over or under-cooked food, rotate your pans throughout the baking time.

When the oven is turned on, the Indicator Light will illuminate on the Control Panel indicating that the oven is preheating. The light will turn off when the temperature is reached and will turn on again when maintaining temperature.

- **Operation**

To set the oven temperature, press and turn the oven control knob **counterclockwise** to the desired temperature. The oven indicator light illuminates and preheat begins.

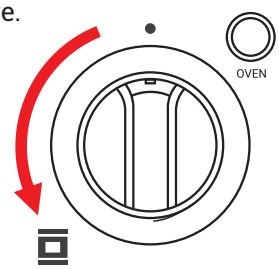

Oven Range 36", 48" (Oven 2) - 150°F to 500°F
Oven Range 48" (Oven 1) - 150°F to 450°F

Note: The oven's temperature settings are set according to convection mode. When using the oven without the convection feature, the temperature inside the oven could be between 25 to 50 degrees lower than the knob indicates.

CONVECTION

Applicable to models: 36in. and 48 in. oven 2

When using the convection function, heat is transferred from the heating element in the bottom of the oven cavity to the oven cavity itself. The convection fan in the rear of the oven then circulates the heat. This convection process provides more even heat distribution throughout the oven cavity. Convection cooking is faster, can be accomplished at lower temperatures and provides more even temperatures than regular cooking.

Convection cooking is preferred for tender cuts of meat and poultry, air-leavened baked foods, breads, cakes, and cookies. For best results, cook foods uncovered in low-sided pans.

- **Operation**

To use convection, turn the Oven Control Knob **counterclockwise** to the desired temperature. The oven indicator light will illuminate. Press in the Convection Fan button on the Control Panel, and it will illuminate blue. The fan works independently and can be turned off at any time during the cooking process by pushing the button in again.

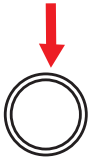

Convection Fan

- **Defrost**

With Oven Control Knob set to **off**, the motorized Convection Fan in the rear of the oven circulates air. The fan accelerates natural defrosting of the food without heat. To avoid illness and food waste, do not allow defrosted food to remain in the oven for more than two hours without being cooked.

- **Dehydrate**

Turn the Oven Control Knob to 175°F and turn **on** the Convection Fan. Over a period of time, water is removed from the food by evaporation. Removal of water inhibits growth of microorganisms and retards the activity of enzymes.

BROIL

Broiling is a method of cooking food directly under broiler in the oven. The top heating element of the oven will radiate downwards and provide high direct heat to quickly cook the food's surface, searing and sealing in juices. Ideal for tender cuts of meat. The Broil feature temperature is 500˚F.

- **Operation**

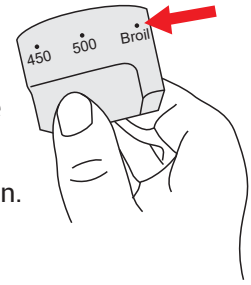

Push and turn the Oven Control Knob **counterclockwise** to the 'BROIL' function.

To turn **off,** push and turn the knob **clockwise** to the off position.

- **Preheating**

Preheating is suggested when searing rare steaks. (Remove any broiler pan before preheating with the infrared broiler as foods will stick on hot metal.) Preheat for approximately 2 minutes, or when the burner is deemed hot. Preheating is not necessary when broiling meat well-done.

- **How To Broil**

1. Use a standard broiler pan with insert. **DO NOT use aluminum foil on a broiler pan insert.** The exposed grease could catch fire.
2. Place the food on the broiler pan insert.
3. Arrange the interior oven rack and place the broiler pan on rack. Be sure to center the broiler pan and position directly under the broil burner.
4. Close the door and turn the Oven Control Knob to the 'BROIL' function.
5. Broil one side until the food is browned. Using pot holders, turn and cook on the second side.

IMPORTANT: Door must be closed during broiling operation.

– Note: Rack position affects doneness.

– It is normal and necessary for some smoke to be present for a broiled flavor.

– You should never broil for longer than 10 minutes, as this could lead to burnt food or even fire. For foods with longer cooking times, it's best to use your broiler to create a crispy crust, either at the beginning or end of the cooking process. For further cooking, place in the oven in a centered position at a temperature between 300 and 450°F.

OVEN LIGHT

The oven lights can be turned on using the oven's corresponding light button located on the Control Panel. Push in to turn on and the button will illuminate. Push again to turn off.

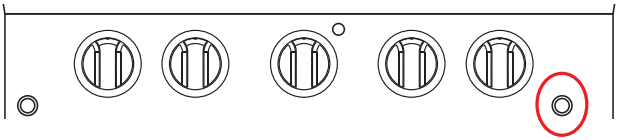

WARNING: NEVER USE THIS APPLIANCE AS A STORAGE SPACE. NEVER USE THE APPLIANCE OVEN DOORS FOR LEANING, STEPPING OR SITITING AS THIS IS HAZARDOUS AND MAY CAUSE INJURY.

WARNING: NEVER USE THIS APPLIANCE AS A SPACE HEATER TO HEAT OR WARM THE ROOM. DOING SO MAY RESULT IN CARBON MONOXIDE POISONING AND OVERHEATING.

COOLING FAN

The cooling fan will activate when the oven reaches a temperature above 140°F/60°C. It will automatically turn off when cooled below 140°F/60°C.

CARE AND CLEANING

The range and its components should be cleaned after each use to avoid buildup of food residue and possible staining or discoloring. Only clean the parts listed in the following instructions.

WARNING: To avoid the risk of burns or electrical shock, ensure that all burner controls are in the OFF position and that all components are completely cool before cleaning.

IMPORTANT: Remove any soiling immediately, including acidic and sugary spills. Spilled food may discolor the burners or other components.

GRIDDLE

- When you are finished cooking and the Griddle is still warm, scrape off all the food residue and cooked bits from your Griddle using a non-scratch tool.
- **Always allow your Griddle to cool before handling and washing.**
- The enamel surface develops a natural patina that will provide a non-stick surface with use. To maintain the patina, when cool, use a paper towel to remove excess grease and oil and wash or wipe with water. Dry thoroughly.
- For a thorough clean, soak the Griddle in hot water. Then wash with water and a mild dish soap. Hand washing is recommended to maintain the enamel finish. **Never place a hot Griddle in cold water to prevent thermal shock.**
- For stubborn stains, use a paste of baking soda and water and apply with a soft brush. Wash with water and mild dish soap.
- Avoid using harsh abrasives, oven cleaners, or scouring pads to maintain the enamel finish on the Griddle. Nylon or soft abrasive pads/brushes may be used.
- Immediately dry thoroughly. Avoid leaving to air-dry as this can promote rust should there be any chipped or scratched areas.

BURNER GRATES

- Clean with a sponge and mild solution of liquid dish soap and warm water. If necessary, use a soft kitchen brush with a paste of baking soda and water.
- Dry thoroughly.
- NOT dishwasher safe.
- Note: the grates have rubber pads on the feet to protect the appliance from scratches. Take caution while cleaning to protect the rubber pads. Should they come off, they can be reapplied using a heat-resistant adhesive.

BURNER CAPS AND BURNER HEADS

- It is important to keep Burner Caps and Burner Heads (in particular the ports) clean of any food soils as this can clog or limit the gas flow.
- Soak parts in a solution of mild liquid dish soap and warm water for 20-30 minutes, then clean with a non-abrasive sponge.
- Do not use stainless steel cleaner, as these parts are not stainless steel.
- If necessary, use a soft kitchen brush or toothbrush to clean stains and ports of the Burner Head.
- Dry thoroughly before reassembly. Any wet ports will prevent the flame from igniting.
- NOT dishwasher safe.

Note: The surfaces of the burner parts and grates become slightly duller over time. This is normal and does not indicate any impairment of the material.

PORCELAIN COOKTOP

- Remove the Burner Grates (and the Burner Caps and Burner Heads if required). Use a damp clean sponge, soft cloth, or nylon pad to wipe over the cooktop surface.
- Soak baked or hardened spills with a small amount of water.
- Do not use harsh or abrasive cleaning agents, rust removers, waxes, polishes, commercial cooktop cleaners, steel wool, metal scrapers, or sharp objects to clean the cooktop.
- Always dry the surface completely with a lint-free kitchen towel to prevent limescale deposits.
- Never use a steam cleaner to clean this cooktop. Pressurized steam could cause permanent damage to the surface and to components.
- **Keep the igniter in the burner base dry. If it gets wet, it will not spark.**

PORCELAIN OVEN INTERIOR

Porcelain is made from natural materials and, therefore, can chip or develop fine lines and cracks due to the expansion and contraction that occurs as the oven temperature fluctuates. This can result in cosmetic imperfections, such as a cloudy, dull, or scratched appearance.

- For best results, wipe up spills and splatters (especially sugary, acidic, and tomato-based sauces) as soon as the range has cooled to avoid staining of the surface. If spills are allowed to cook on the surface, they may permanently stain. Never wipe up a hot porcelain surface with a damp sponge. It may cause chipping or hair line cracks.
- Do not use harsh or abrasive cleaning agents, rust removers, waxes, polishes, steel wool, metal scrapers, or sharp objects to clean the oven interior.

- Wash the entire oven cavity with mild liquid dish soap and warm water.
- Blemishes that remain should not affect the function of the porcelain.
- Note: For easier cleaning, the bottom oven panel is removable by simply lifting up when cool.

IMPORTANT: Do not clean the oven gasket. The fiberglass material cannot withstand abrasion and rubbing and moving the gasket may compromise the door seal.

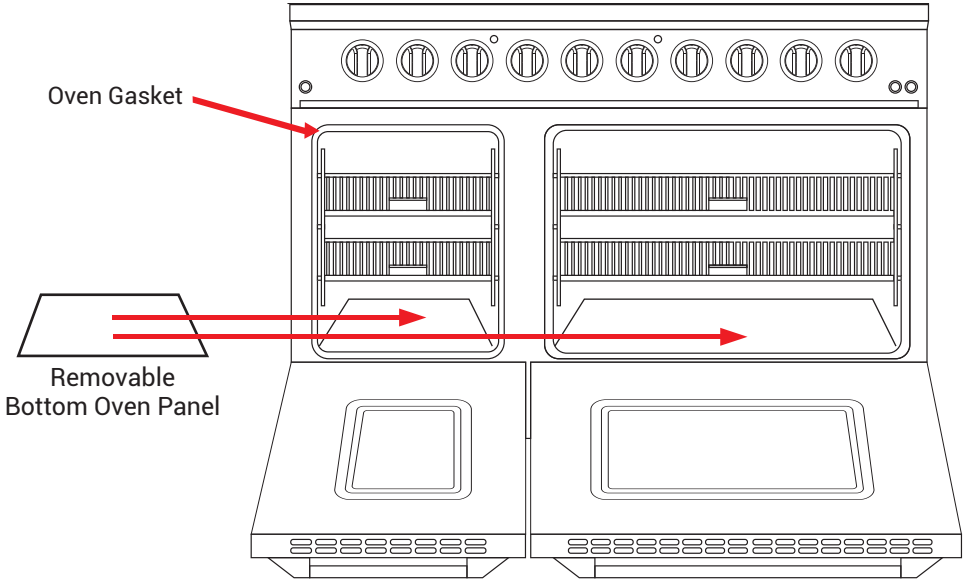

OVEN RACKS, TELESCOPIC RAILS, AND RACK GUIDES

- Slide out the Oven Racks and lift off the Telescopic Rails to remove.
- The Telescopic Rails are detachable by unhooking from the Oven Guide. Unhook the bottom, then the top.
- The Oven Rack Guides can be unscrewed for thorough cleaning.
- Clean parts with a solution of detergent and hot water. To clean heavy soil, use a scouring pad such as steel wool with plenty of water and a mild abrasive such as a paste of baking soda and water or oven dedicated cleaning products.
- Dishwasher Safe.

CONTROL PANEL, BURNER KNOBS, DOOR HANDLE

- Clean with a solution of mild liquid dish soap and warm water and a damp cloth. Wipe in the direction of the grain.
- Do not use abrasive cleaners or scrubbers; they will permanently damage the finish and printed surfaces.
- Do not use any cleaning product containing chlorine bleach.
- Dry the components with a soft, lint-free cloth.

TOP VENT

- The stainless-steel top vent can be removed by unscrewing.
- Use a non-abrasive stainless-steel cleaner to spray on any grease build up on the underside of the vent. Leave to penetrate.
- Wash with hot water and a mild dish soap.
- Thoroughly dry before reattaching.

STAINLESS-STEEL BODY

- Use a non-abrasive stainless-steel cleaner and apply with a soft lint-free cloth.
- To bring out the natural luster, lightly wipe the surface with a water-dampened microfiber cloth followed by a dry polishing chamois. Always follow the grain of the stainless steel.

REPLACING AN OVEN LIGHT

- Turn off the power at the main power supply.
- To prevent electrical shock or personal injury, make sure the oven and light bulb are cool and power to the oven has been turned off before replacing the light bulb.
- Remove the lens cover from the housing by pulling straight out then replace with a 25W appliance bulb.
- Make sure the lens cover is in place prior to using the oven again.

OVEN DOOR AND FRONT PANEL

- Clean with a solution of mild liquid dish soap and warm water and a damp sponge. Rinse well.
- Do not allow excess water to run into any holes or slots in the door, including around the glass frame. Any soap left on the liner causes additional stains when the oven is heated.
- Do not use oven cleaners, cleansing powders of harsh abrasives on the external side of the door.
- You may use a glass cleaner to clean the glass on the oven door to remove finger-prints or smears. Dry completely with a soft, lint-free cloth.

REMOVING THE OVEN DOOR AND KICK PLATE

WARNINGS:

- **The removable oven door is heavy. You may need help removing and replacing it.**
- **Be careful when removing and lifting up the door.**
- **DO NOT lift the door by the handle, but by holding the door on each side.**

For normal range use, it is not recommended to remove the oven door. Make sure the oven is turned off and cool when replacing the door. The oven door is heavy, be careful when lifting it.

Follow these instructions to replace the door:

1. Open the door completely.

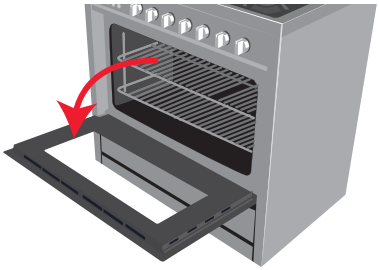

2. Lift up and pull the small levers located on the two hinges all the way back to unlock.

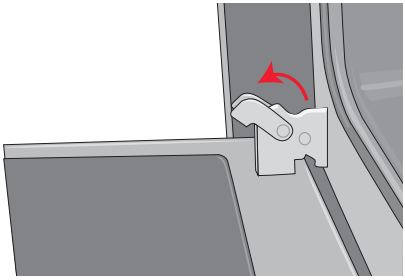

3. While holding the door on each side, close the door until it touches the levers. Continue closing the door until it is about 4" (10 cm) from being completely closed.

4. Lift up the door and pull it towards you, pulling it out of the hinges. The door will gently detach from the oven. If the door does not easily detach from the oven, do not apply force and make sure the levers are unlocked.

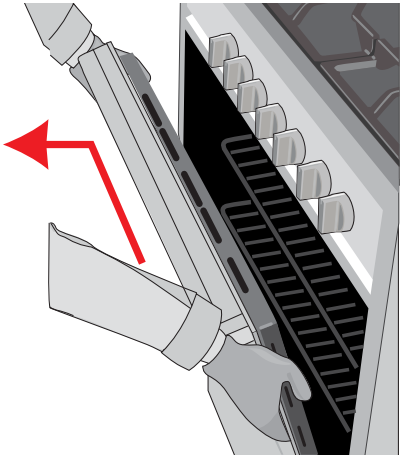

5. Remove the kick plate.

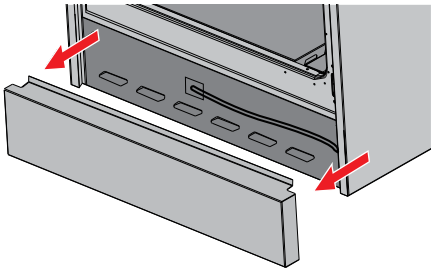

6. To replace the door, perform the previous steps in reverse order.

TROUBLESHOOTING

Should you encounter any issues with your range, refer to the following table for possible troubleshooting solutions.

ISSUE	POSSIBLE CAUSE	SOLUTION
Nothing works	Oven is not connected to the electrical power. Power supply is not energized.	Have oven connected to a properly sized electrical power supply by a qualified electrician. Have an electrician check the power supply, including the house circuit breaker, wiring and fuses.
Burners do not light or do not burn evenly	Plug on range is not completely inserted in the electrical outlet. Burner ports/holes on the side of the burner may be clogged. Burner caps not properly attached.	Make sure the unit is properly connected to the power supply. Remove the burner heads and clean them. Check the igniter area for burned-on food or grease. Reattach burner caps. Including both for the double burner.
Burner flames very large and yellow	Burner ports/holes are clogged. Burner heads or burner caps are not positioned properly. Cooktop is being operated with the wrong type of gas. Regulator is not installed, is faulty, or is set for the wrong type of gas.	Clean burner head ports with straightened paper clip, needle, or wire. Remove and carefully re-install burner head and caps. Ensure that the type of cooktop matches the natural gas supply. Check installation, replace regulator, or set regulator for proper gas.
Sparking but no flame ignition	Gas shut-off valve is in the 'OFF' position.	Turn shut-off valve to the 'ON' position.

Igniters spark continuously after flame ignition	Power supply polarity is reversed. Igniters are wet or dirty. Improper grounding.	Have polarity corrected. Dry or clean igniters. Use a hair dryer, if desired. Check home electrical grounding.
Burner flame goes out at low setting	Low gas supply pressure. Air intake holes around burners are obstructed.	Contact gas company. Remove obstruction.
Oven will not heat	No Power Supply (Oven light and Igniters do not come on either).	Check that the circuit breaker hasn't tripped and there is no power outage in your area.
Foods over-cooked or under-cooked	Incorrect cooking time or temperature.	Adjust time, temperature, or rack position.
One of the oven lights does not come on, but oven works	The light bulb is loose. The light bulb has blown.	See 'Cleaning' instructions to check bulb is securely in socket. If not replace.
'Cracking' or 'Popping' sound	This is the sound of metal heating and cooling.	This is normal.

SPECIFICATIONS

36 Inch Series
Model: MGR-600 (B)

48 Inch Series
Models: MGR-670 and MGR-670 (B)

NG: Input Pressure 7 inch Output Pressure 5 inch
LP: Input Pressure 11 inch Output Pressure 10 inch

36 Inch Total BTU: 103,000

48 Inch Total BTU: 140,000

Igniter: 120V, 60Hz, 3 Amp

Oven: 120V, 60Hz, 5.0 Amp

Oven Fan: 120V, 60Hz, 0.53 Amp

Oven Lights: 120V, 60Hz, 0.2 Amp, 25 W

36" MGR-600 (B) Series

48" MGR-670 Series

Müeller

Your purchase comes with a 100% satisfaction guarantee from Müeller

If you are not happy with the product for any reason, please contact us at ***support@muellerhome.us*** with your feedback or questions, and we will do our best to make things right for you!

For warranty details visit ***www.muellerhome.us***

Müeller USA

2701 Kimball Ave, Pomona, CA 91767

E-mail: support@muellerhome.us

Web: www.muellerhome.us