HOME
DECORATORS
COLLECTION

Item#:1007412068
Model#: TJ-TNV3120WH

ASSEMBLY INSTRUCTIONS

TERRYN 31INCH VANITY

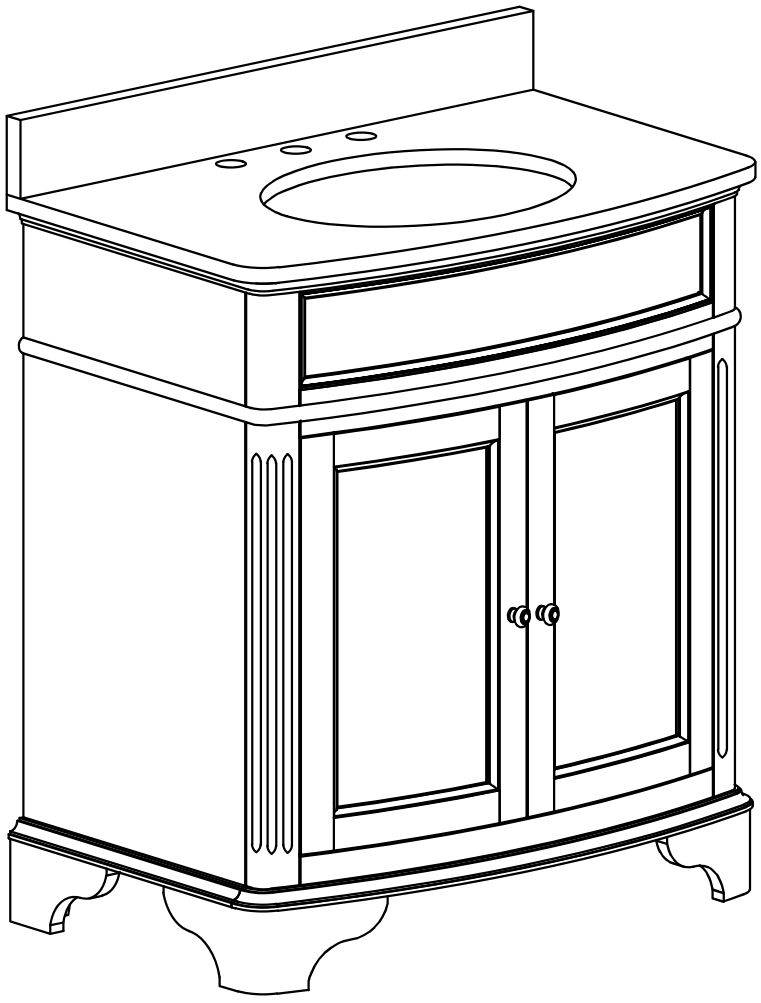

Questions, problems, missing parts? Before returning to the store,
call Home Decorators Collection Customer Service
8 a.m - 7 p.m., EST Monday- Friday, 9 a.m. 6 p.m.,EST, Saturday

1-800-998-7021

HOMEDEPOT .COM/HOMEDECORATORS

THANK YOU

We appreciate the trust and confidence you have placed in Home Decorators Collection through the purchase of this Vanity.We strive to continually create quality products designed to anhance your home. Visit us online to see our full line of products available for your home improvement needs.

Thank you for choosing Home Decorators Collection!

Table of Contents

Table of Contents.....2
Safety Information.....2
Warranty.....2
Limited lifetime Warranty.....3
What is Covered.....3
What is not Covered.....3
California and Minnesota Residents.....3
California residents.....3
Minnesota residents.....3
Pre-assembly.....4
Planning Assembly.....4
Tools Required.....4
Hardware Included.....4
Pre-assembly (continued).....5
Parts included.....5
Package Contents.....5
Assembly.....6&7&8&9
1 Unpackaging countertop.....6
2 Adjusting the leveler.....6
3,4,5 Installing the backsplash.....7
6 Aligning the doors (optional).....8&9
7 Installing the faucet 9
Maintenance.....10
Care and Cleaning.....10
Troubleshooting.....10

Safety Information

⚠ DANGER

- Keep small parts away from children during assembly.
- Failure to follow warning and cautions could result in serious injury.
- Product is designed to hold 400 lbs. Exceeding this limit may damage the product or cause injury to the user.
- DON'T use harsh bathroom cleaners or grout cleaners on any natural stone.

⚠ WARNING

- Read these instructions carefully and keep in a safe place.
- Adult assembly required.
- This product should only be used on flat, level surface.
- Do not over tighten connectors (screws, bolts, etc.) Overtightening can lead to product damage.
- Small parts may present choking hazard prior to assembly.
- Do not stand, step or climb on unit.

⚠ CAUTION

- USE preventative cleaning measures to keep your stone pristine.
- USE sealers according to the product specific directions.
- Blot spills quickly, and wash with mild soap and warm water.
- Stone countertops (Granite, Marble, etc.) are surprisingly resilient to stains and scratches. However, as a preventative measure, any spills on the stone surfaces should be wiped up within a reasonable amount of time. Don't let liquid sit on the stone overnight. Stones are most prone to staining by oil and acid, so be sure to blot these spills up as soon as they happen. Follow up by cleaning the stone with a mild non-abrasive soap and water.
- Be sure to check all packing materials carefully for small parts that may have come loose inside the carton during shipment. If parts are missing, contact THE HOME DEPOT to obtain any missing parts.
- Using abrasive cleansers will damage the surface.

Warranty

This warranty applies to the distributor's vanities installed for commercial and residential use. The distributor warrants that, when installed in accordance with the Recognized Plumbing Industry Practice, the vanities are free of manufacturing defects for a period of one (1) year from the date of purchase.

We guarantee your satisfaction with each vanity. Should any vanity not meet your satisfaction due to a visual defect, simply return it to your retailer with the original packaging, prior to installation, for a replacement.

This warranty applies only to the original purchaser and installation site and is not transferable.

LIMITED LIFETIME WARRANTY

WHAT IS COVERED

Home Decorators Collection products are manufactured with superior quality standards and workmanship and are backed by our limited lifetime warranty. Home Decorators Collection products are warranted to the original consumer purchaser to be free of defects in materials or workmanship. We will replace FREE OF CHARGE any product or parts that proves defective. Simply, return the product / part to any of The Home Depot retail locations or call 1-800-998-7021 to receive the replacement item. Proof of purchase (original sales receipt) from the original consumer purchaser must be made available for all Home Decorators Collection warranty claims.

WHAT IS NOT COVERED

This warranty excludes incidental/consequential damages and failures due to misuse, abuse or normal wear and tear. This warranty excludes all industrial, commercial & business usage, whose purchasers are hereby extended a five-year limited warranty from the date of purchase, with all other terms of this warranty applying except the duration of warranty. Some states and provinces do not allow the exclusion or limitation of incidental or consequential damages, so the above limitations may not apply to you. This warranty gives you specific legal rights and you may also have other rights that vary from state to state and province to province. Please see a store or contact 1-800-998-7021 for more details.

California and Minnesota Residents

CALIFORNIA RESIDENTS

⚠ **WARNING** THIS PRODUCT CAN EXPOSE YOU TO FORMALDEHYDE WHICH IS KNOWN TO THE STATE OF CALIFORNIA TO CAUSE CANCER. FOR MORE INFORMATION, GO TO WWW.P65WARNINGS.CA.GOV.

MINNESOTA RESIDENTS

"IMPORTANT HEALTH NOTICE.

SOME OF THE BUILDING MATERIALS USED IN THIS HOME (OR THESE BUILDING MATERIALS) EMIT FORMALDEHYDE. EYE, NOSE, AND THROAT IRRITATION, HEADACHE, NAUSEA AND A VARIETY OF ASTHMA-LIKE SYMPTOMS, INCLUDING SHORTNESS OF BREATH, HAVE BEEN REPORTED AS A RESULT OF FORMALDEHYDE EXPOSURE. ELDERLY PERSONS AND YOUNG CHILDREN, AS WELL AS ANYONE WITH A HISTORY OF ASTHMA, ALLERGIES, OR LUNG PROBLEMS, MAY BE AT GREATER RISK. RESEARCH IS CONTINUING ON THE POSSIBLE LONG-TERM EFFECTS OF EXPOSURE TO FORMALDEHYDE.

REDUCED VENTILATION MAY ALLOW FORMALDEHYDE AND OTHER CONTAMINANTS TO ACCUMULATE IN THE INDOOR AIR. HIGH INDOOR TEMPERATURES AND HUMIDITY RAISE FORMALDEHYDE LEVELS. WHEN A HOME IS TO BE LOCATED IN AREAS SUBJECT TO EXTREME SUMMER TEMPERATURES, AN AIR-CONDITIONING SYSTEM CAN BE USED TO CONTROL INDOOR TEMPERATURE LEVELS. OTHER MEANS OF CONTROLLED MECHANICAL VENTILATION CAN BE USED TO REDUCE LEVELS OF FORMALDEHYDE AND OTHER INDOOR AIR CONTAMINANTS.

IF YOU HAVE ANY QUESTIONS REGARDING THE HEALTH EFFECTS OF FORMALDEHYDE, CONSULT YOUR DOCTOR OR LOCAL HEALTH DEPARTMENT."

Pre-assembly

PLANNING ASSEMBLY

Check the vanity for damage before installation. If any part of the vanity is missing or damaged, contact the Customer Service Team at 1-800-998-7021.

Ensure that the vanity location is accessible to water supply and drain lines. It is recommended that you rough-in the water lines and drain before installing the vanity.

NOTE: A drain pipe and trap are not included with this vanity.

TOOLS REQUIRED

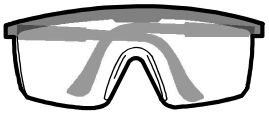

Safety goggles

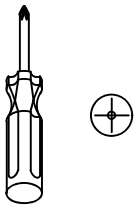

Phillips screwdriver

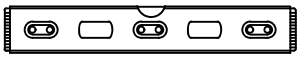

Level

HARDWARE INCLUDED

NOTE: Hardware not shown to actual size and pre-assembled on product.

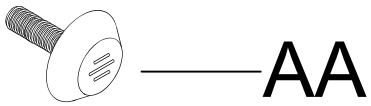

AA



BB



CC

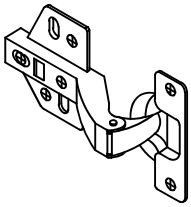

DD

Part	Description	Quantily
AA	Adjust levelers	4
BB	Bolt for knob	2
CC	Knob	2
DD	European hinge	4

Pre-assembly (continued)

PARTS INCLUDED

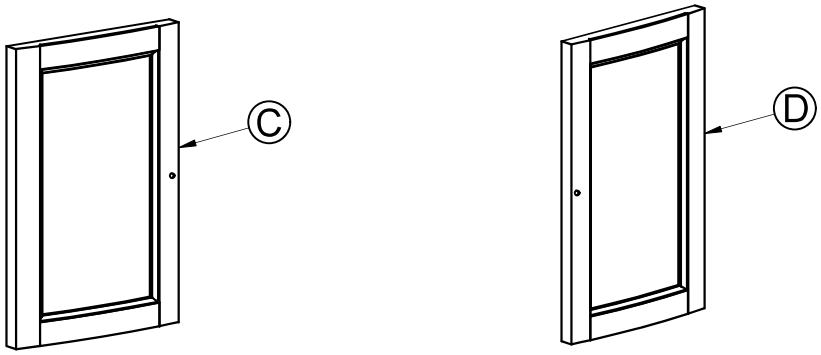

Part	Description	Quantily
C	Left Door	1
D	Right Door	1

PACKAGE CONTENTS

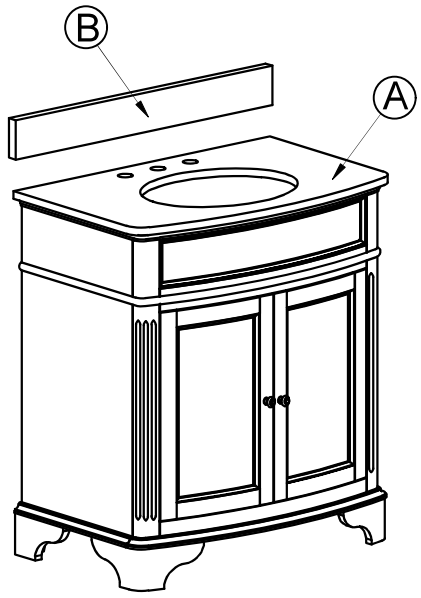

Part	Description	Quantily
A	Vanity	1
B	Backsplash	1

Assembly

1 Unpackaging countertop

- ☐ Cut the connecting tapes at the two ends to remove short honeycomb cap.
- ☐ With two hands on the other side of the vanity, remove the large honeycomb cap by gently pulling towards your position.

NOTE: Backsplash is packaged under the honeycomb cap.

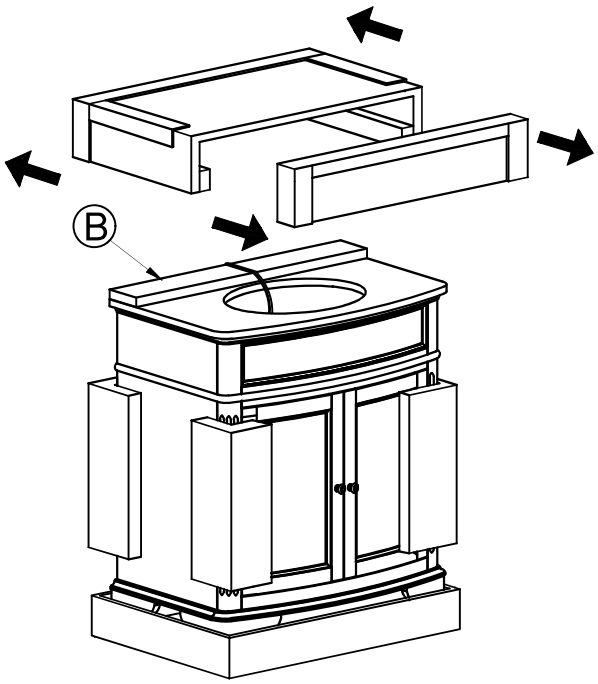

2 Adjusting the leveler

- ☐ Adjust the leg levelers to ensure that the vanity is even.

NOTE: A drain pipe and trap are not included with this vanity.

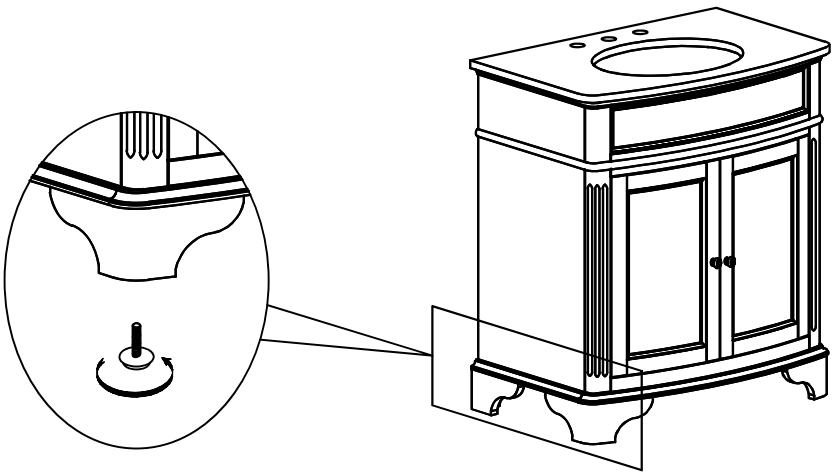

Assembly

3 Installing the backsplash

- ☐ Apply silicone to the bottom of the backsplash (B).
- ☐ Place the backsplash (B) on the vanity (A). Be sure to align the backsplash (B) with the top of the vanity (A).
- ☐ Allow the silicone to dry before using the vanity.

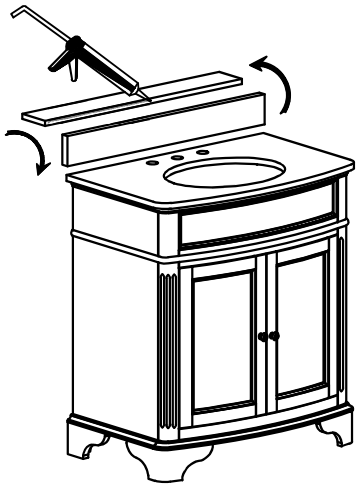

4 Installing the backsplash

- ☐ Gently remove excess glue from the connecting area.

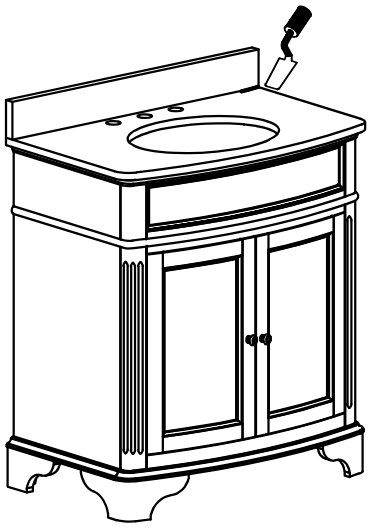

5 Installing the backsplash

- ☐ Let the vanity and backsplash sit for 24 hour before use.

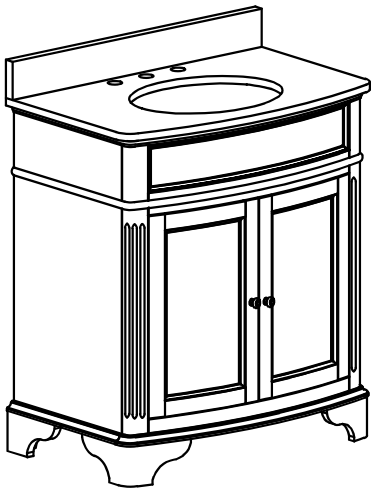



Assembly

6 Aligning the doors (optional)

If you need to adjust the doors, do so in the following manner.

☐ To adjust the door up or down, loosen screws (a) on both hinges (1), adjust door (2), and retighten screws (3).

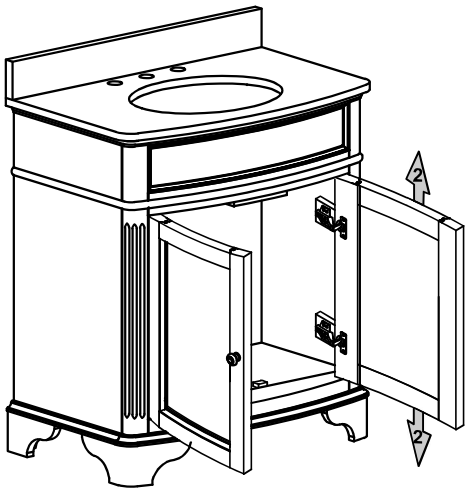

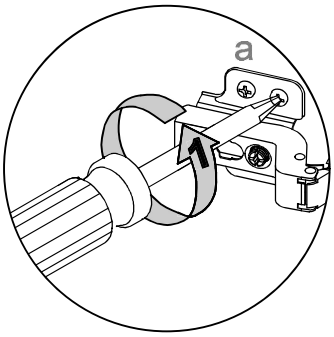

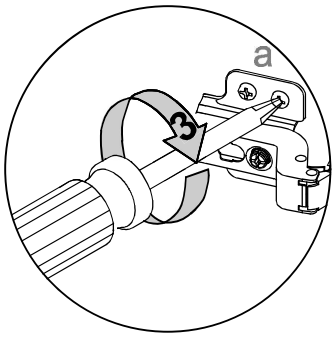

☐ To adjust the door left or right, turn screws (b) on both hinges (1), in or out (2).

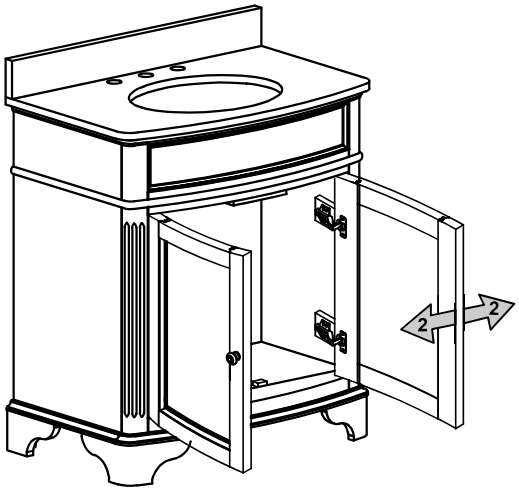

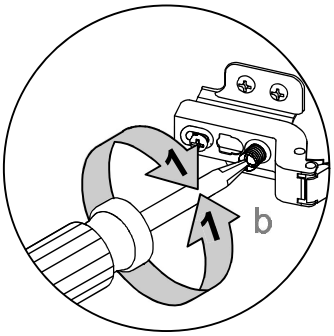

Assembly

☐ To adjust the door in or out, loosen screws (C) on both hinges (1), adjust door (2), and retighten screws (3).

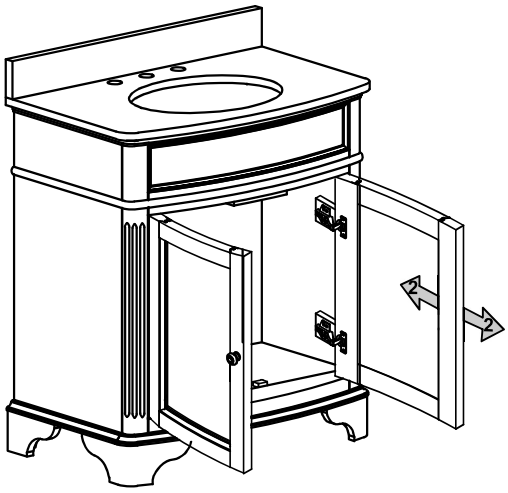

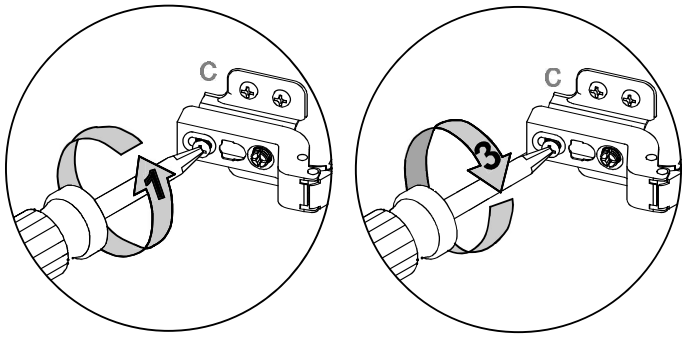

7 Installing the faucet (not included in the package)

☐ Make sure the thread of the faucet (L) is long enough to fix to the vanity top and connect the water system.

☐ Installing the faucet base on your own faucet instruction.

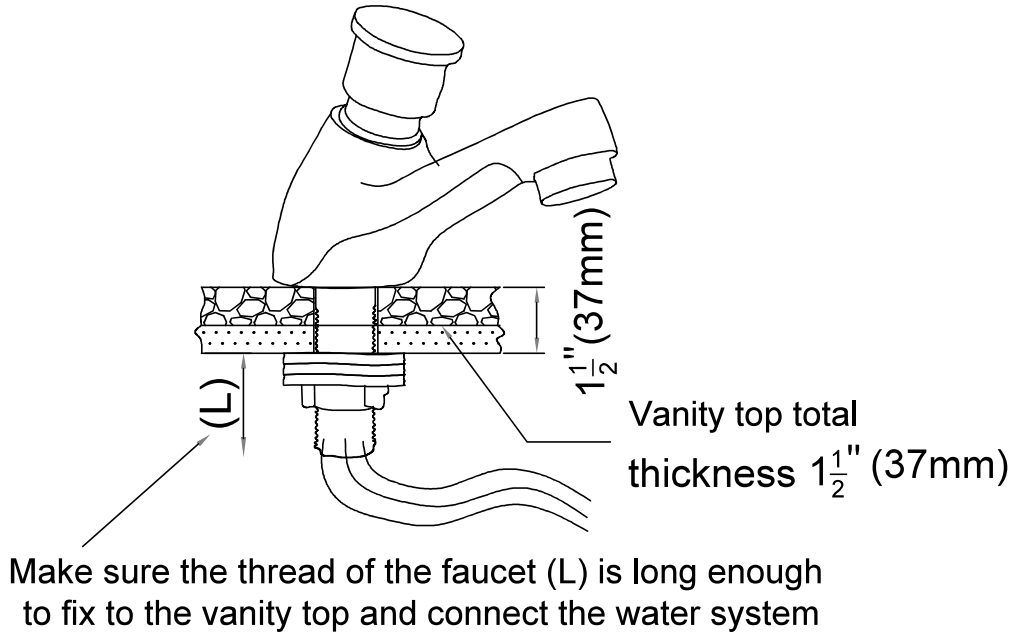

Maintenance

- ☐ In the event that your furniture is stained or otherwise damaged during use, we recommend that you call a professional to repair your furniture.
- ☐ Check bolts/screws periodically and tighten them if necessary.

Care and Cleaning

- □ Rinse vanity top with clean, hot water frequently.
- □ Blot spills quickly, and wash with mild soap and warm water.
- □ Clean the surface with a glass cleaner or other household cleansers that are non-abrasive
- □ Remove oil-based stains with acetone, mineral spirits, or ammonia.
- □ Organic stains like coffee, tea, or juice can be removed with hydrogen peroxide, mixed with a few drops of ammonia.
- □ Water spots or rings can be removed by buffing the spots gently with 00-gauge steel wool.
- □ Small nicks and scratches can often be removed the same way.
- □ Larger scratches, chips, and resilient stains may require professional help. Please contact your local stonemason for details.
- □ *Use if you have Natural Stone* Your stone was sealed at the factory, but reapplication is necessary over time. How often is determined by the quality of the sealer used, and the frequency of use. We recommend using a penetrating non-toxic sealer for bath areas.

Troublesshooting

PROBLEM	POSSIBLE CAUSE	CORRECTIVE ACTION
The vanity is tilted.	The levelers are not level.	Adjust the levelers to ensure they are level.

HOME
DECORATORS
COLLECTION

Questions, problems, missing parts? Before returning to the store,
call Home Decorators Collection Customer Service
8 a.m - 7 p.m., EST Monday- Friday, 9 a.m. 6 p.m.,EST, Saturday

1-800-998-7021

HOMEDEPOT .COM/HOMEDECORATORS

Retain this manual for future use.