Item ID	Front Thickness [in] mm	Door Thickness [in] mm
BT2135B-BT	[.75] 19	[.75] 19

This profile belongs to BT2135B-BT

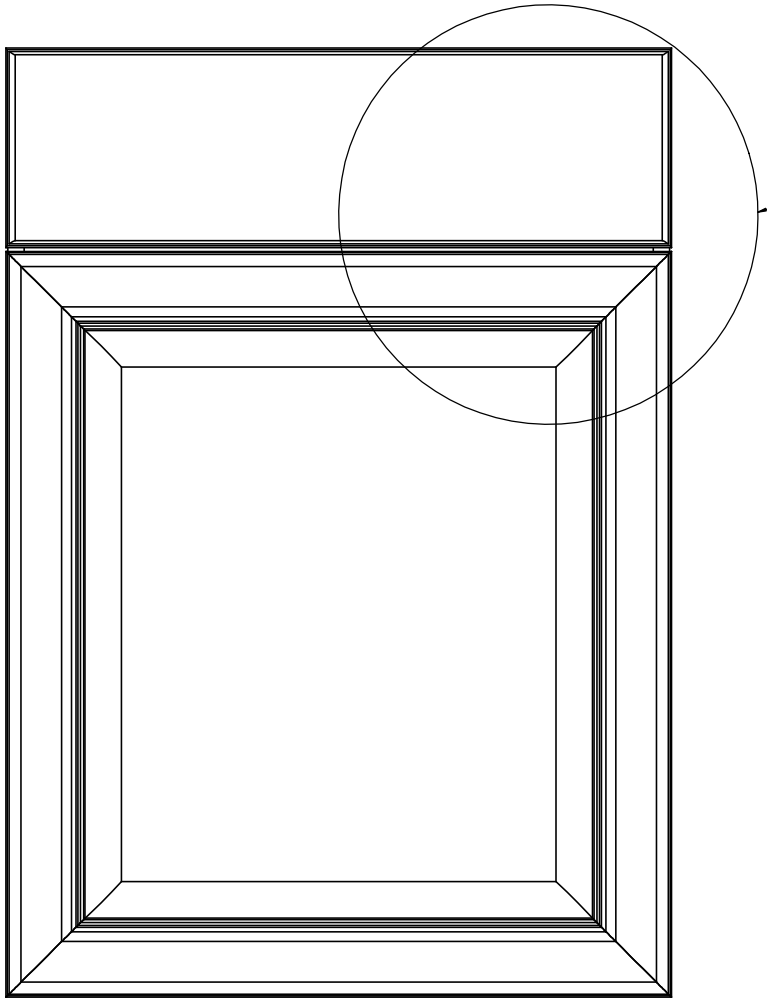

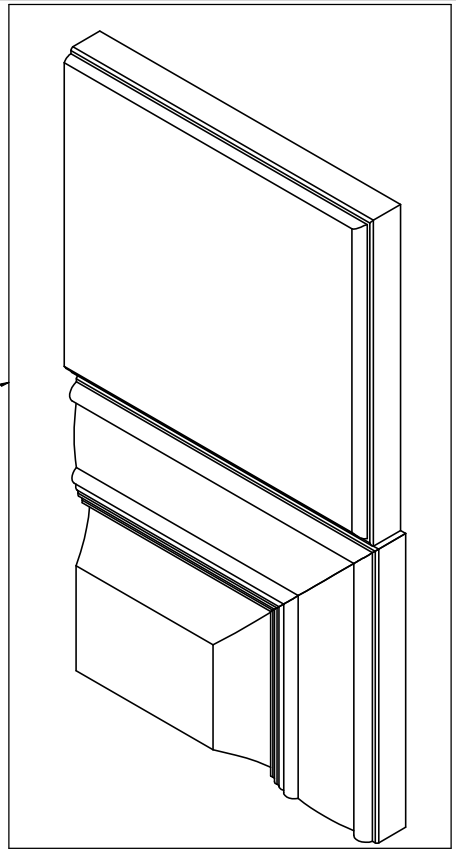

Detailed View

Profile: Benton Red Cognac

PROPRIETARY AND CONFIDENTIAL

THE INFORMATION CONTAINED IN THIS DRAWING IS THE SOLE PROPERTY OF WOODCRAFTERS. ANY REPRODUCTION IN PART OR AS A WHOLE WITHOUT THE WRITTEN PERMISSION OF WOODCRAFTERS IS PROHIBITED.

UNLESS OTHERWISE SPECIFIED

DIMENSIONS ARE IN MM AND [INCHES]

TOLERANCES ARE +.039[1]-.039[1]

SCALE:1:2

Wood Crafters®

Item ID	Shelf Thickness [in] mm	Shelf Length and Width [in] mm	Depth "X" [in]
CM1835U-WH	N/A	N/A	24.5
CM1835U-DK			24.6
BT1835U-WH			24.5
BT1835U-RC			24.6
CM1835U-KG			24.5

Description					
Kitchens-Wall Cabinet 30W x 15H					
REV	ECO#	Description	REV'D BY DATE	CHK'D BY DATE	APRV'D BY DATE
0		Release	ASG 12/7/17	ASG 12/7/17	ASG 12/7/17
1		Updated Design	ASG 5/16/18	ASG 5/16/18	ASG 5/16/18

Backing
435x797mm

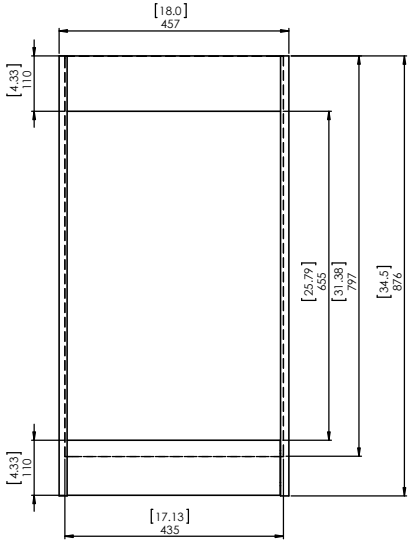

Back View

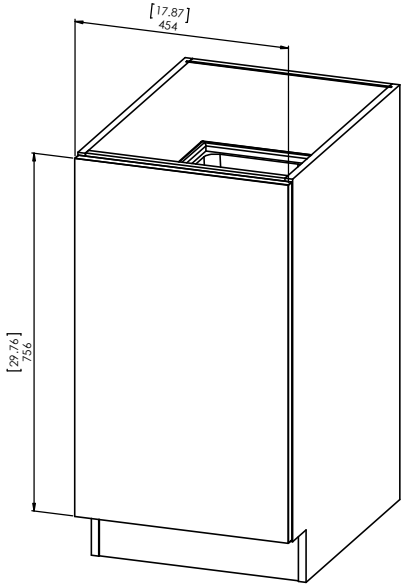

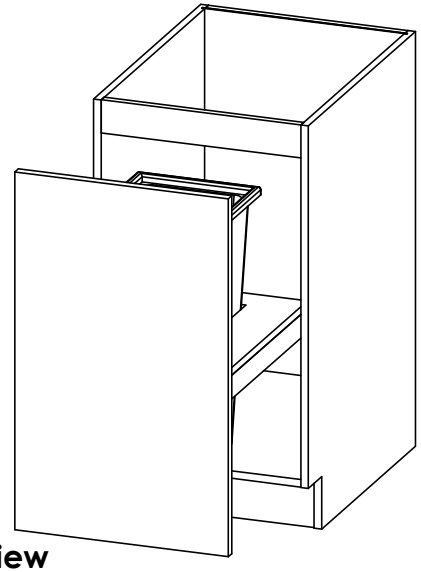

Isometric View

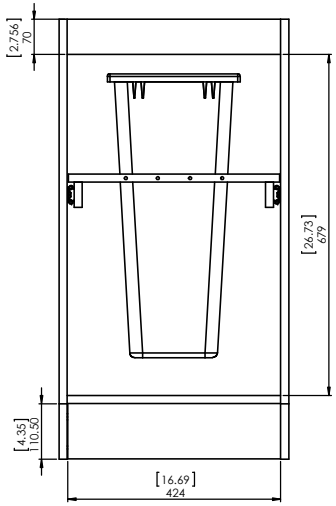

Front View (front door removed)

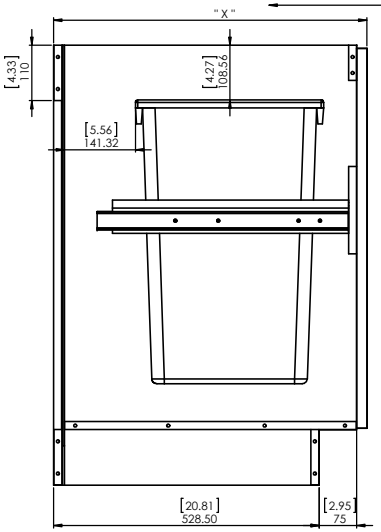

Depth "X" depens on door profile

Side View (left panel removed)

	NAME	DATE	
DRAWN	Adrian Salinas	11/8/17	MATERIAL:
CHK'D			
APPV'D			
MFG			WEIGHT:

Wood Crafters®

PROPRIETARY AND CONFIDENTIAL

THE INFORMATION CONTAINED IN THIS DRAWING IS THE SOLE PROPERTY OF WOODCRAFTERS. ANY REPRODUCTION IN PART OR AS A WHOLE WITHOUT THE WRITTEN PERMISSION OF WOODCRAFTERS IS PROHIBITED.

UNLESS OTHERWISE SPECIFIED

DIMENSIONS ARE IN MM. AND [INCHES]

TOLERANCES ARE +/- 1[0.039]

SCALE:1:5

Trash Can Cabinet

A1

SCALE:1:5

SHEET 1 OF 1