MOUNTING AND WIRING

WARNING:

Improper installation may cause electrical shock, fire, or equipment damage. The person performing the installation must be familiar with the construction and operation of the product and associated hazards

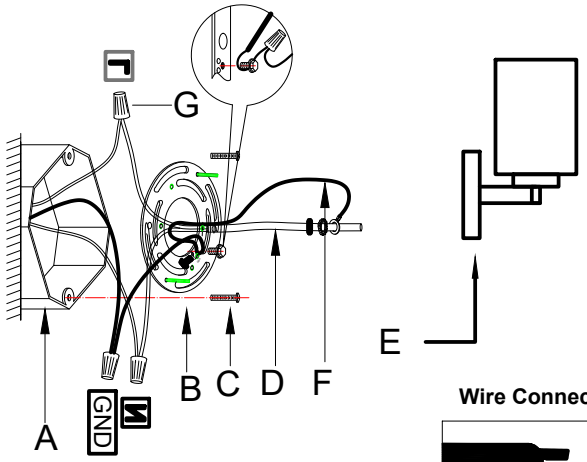

Wire Connection Diagram:

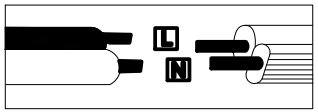

Please proceed in an alphabetical order:

- A.Existing Elextrical BOX B.Crossbar C.Crossbar Screws D.Ground Wire E.Backplate F.Wire G.Junction Caps
- attach the crossbar(B)to the existing electrical box(A) using the two crossbar screws(C)which are not supplied and should already in your box.
- Pass the main wire(F)and ground wire(D)through the Backplate (E)and the crossbar(B)until the end of the main wire(F)reaches the electrical box (A)where you can wire use electrician connections.Be sure when connecting the wire use electrician approved junction caps(G).stow the excess wire in the electrical box(A).raise the Backplate (E),attach Backplate (E)to ceiling,and hold the Backplate (E).

Installation Instructions

Model: E293

Customer Service Number: (832) 478-8866
Customer Service Email: WeCareWeFix@gmail.com
Please include your name, contact methods, product name, and model number in the email.

IMPORTANT SAFETY INSTRUCTIONS:

- Please read through all the instructions carefully and completely before beginning assembly and installation
- This product must be installed in accordance with installation instructions and all safety and building codes. It is strongly suggested that all direct wired fixtures be installed by a licensed electrician
- Be sure the electricity to the wires you are working on is shut off; either the fuse is removed or the circuit breaker is turned off. Turning the power off using the light switch is not sufficient to prevent electrical shock

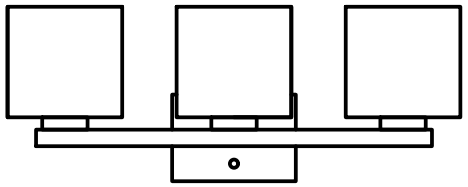

⚠WARNING: This product can expose you to chemicals including lead,which is known to the State of California to cause cancer or birth defects or other reproductive harm. For more infomation go to www.P65Warnings.ca.gov

PART LIST AND ASSEMBLY ILLUSTRATION

Note: Some parts may be pre-installed or pre-assembled.

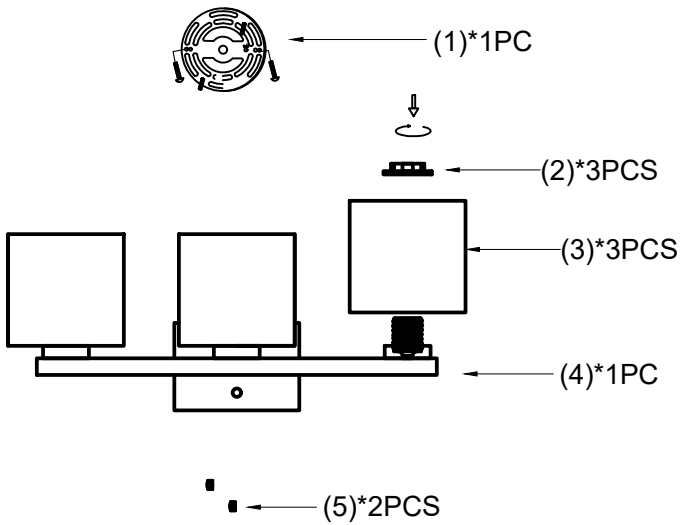

ASSEMBLING, INSTALLATION, AND MOUNTING

1

Light Bulb (Not included)

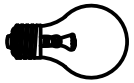

E26

3

