REPAIR SHEET

BRAND		DESCRIPTION
RYOBI		**40 Volt Brushless Blower**
MODEL NO.	MFG. NO.	
RY404014VNM	**108726001**	

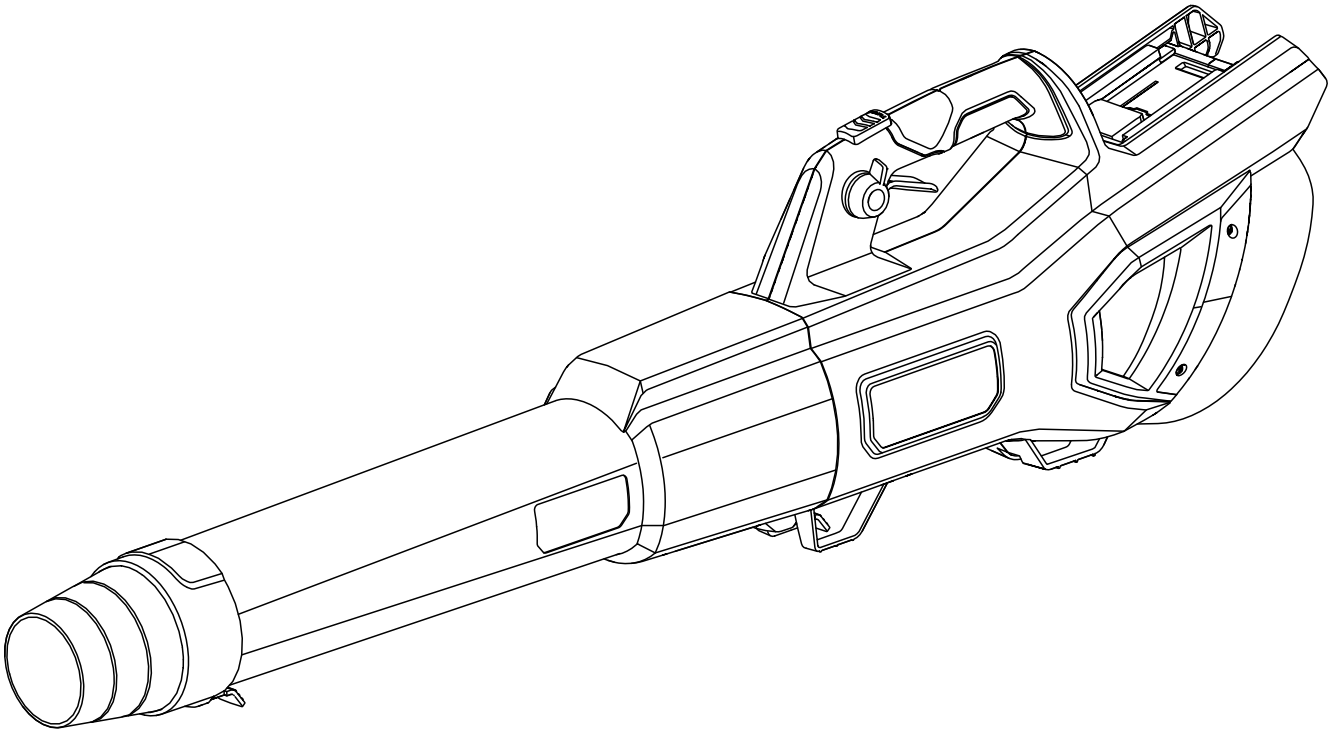

TTI OUTDOOR POWER EQUIPMENT, INC.
P.O. Box 1288, Anderson, SC 29622 ■ 1-800-525-2579 ■ **www.ryobitools.com**

1-5-22 (Rev:03)

The model number and manufacturing location will be found on a label attached to the product. Always mention this information in all communications regarding this product and when ordering parts.

RY404014VNM

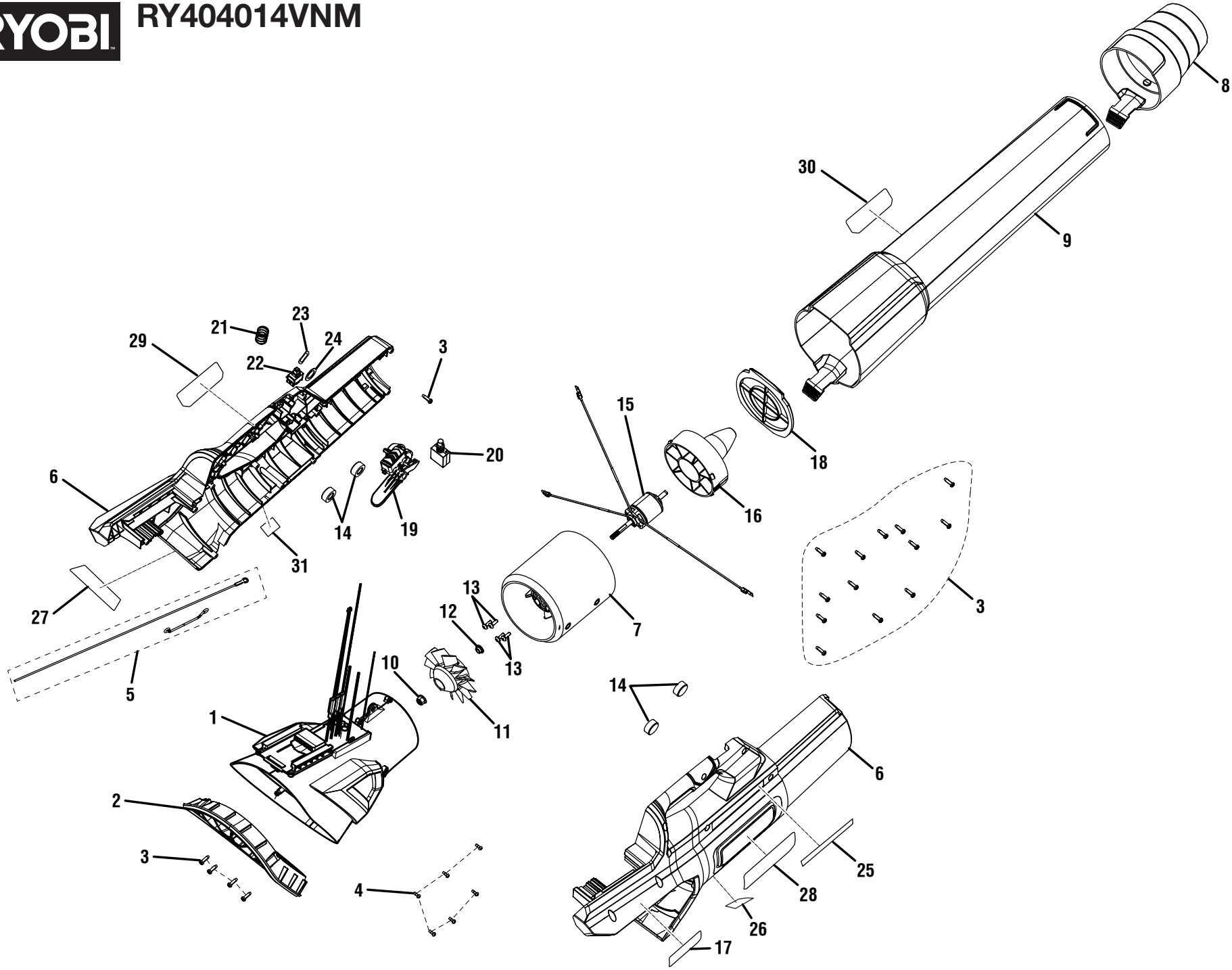

RY404014VNM

PARTS LIST

KEY NO.	PART NO.	DESCRIPTION	QTY.
1	205650001	Motor Controller and Inlet Bell Assembly	1
2	543748002	Inlet Guard	1
3	661817001	Screw (M4 x 13.5 mm, T15 Torx Pan Hd.)	18
4	660203001	Screw (M3 x 8 mm, Pan Hd.)	6
5	318193001	Grounding Strap Assembly	1
6	205649001	Housing Assembly (Inc. Key Nos. 17, 25-29 & 31)	1
7	318192001	Stator Assembly	1
8	205634001	Speed Nozzle Assembly	1
9	205709001	Blower Tube Assembly (Inc. Key No. 30)	1
10	678774009	Flange Lock Nut (M6)	1
11	543752001	Fan	1
12	612854002	Bushing	1
13	660137001	Screw w/Washer (M4 x 12 mm)	4
14	565463001	Rubber Cap	4
15	742653004	Motor	1
16	543754001	Nose Cone	1
17	941110041	Ingestion Icon Label	1

KEY NO.	PART NO.	DESCRIPTION	QTY.
18	543756001	Cross-Hairs	1
19	317856001	Trigger and Cruise Control Assembly	1
20	760777001	Signal Switch	1
21	699363001	Spring	1
22	760781001	Push Switch	1
23	636095001	Wave Washer (ID13.7 x OD19.2 x 0.3t)	1
24	635793001	Flat Washer (ID13.5 x OD20 x 2t)	1
25	941110033	Icon Label	1
26	941110052	QR Label	1
27	941110031	WHISPER SERIES Logo Label	1
28	941110051	Data/Warning Label	1
29	941110030	RYOBI 40V HP Label	1
30	940705583	40V HP Brushless Label	1
31	941097124	dB Label	1
	Not Shown:		
	998000655	Operator's Manual	

RY404014VNM

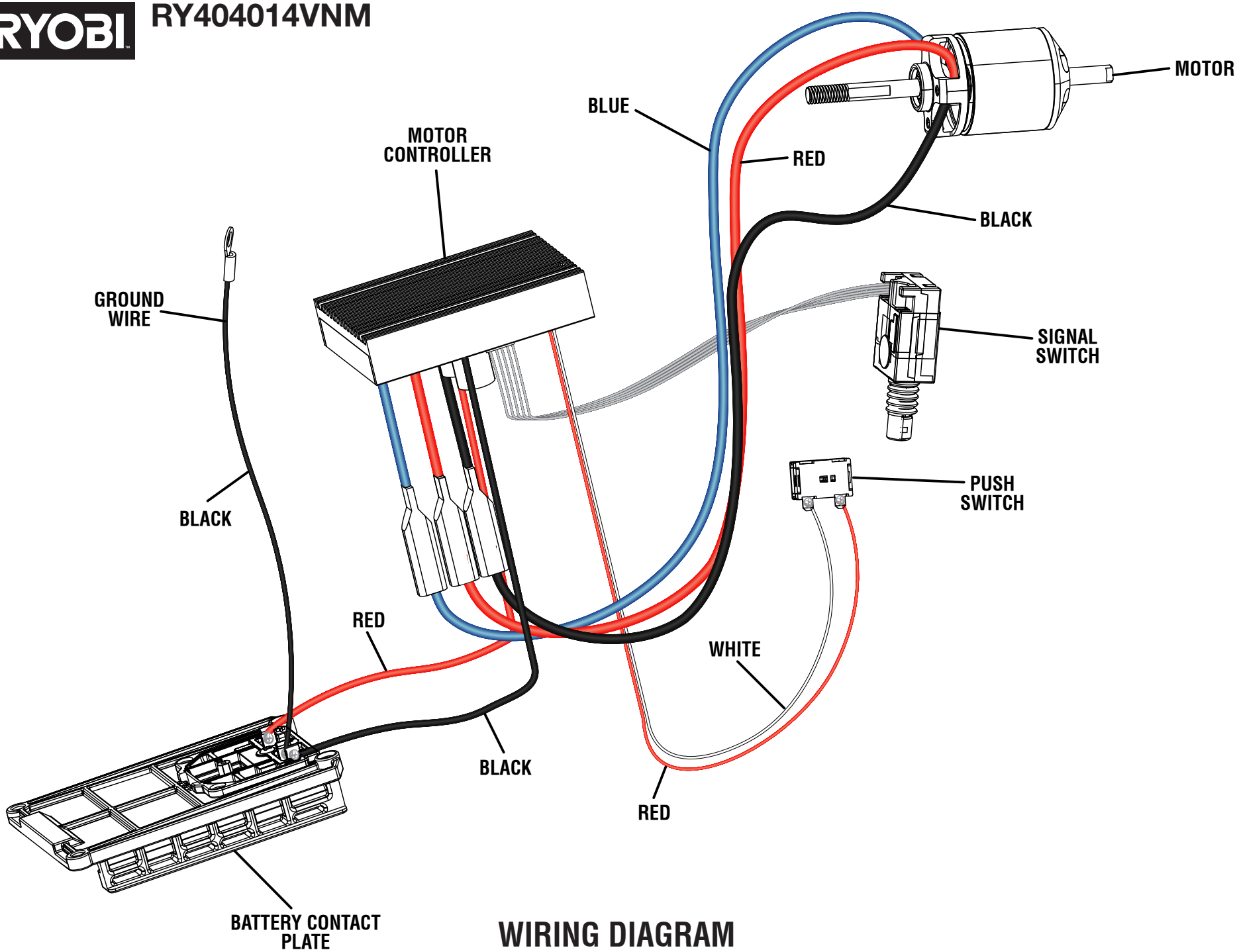

WIRING DIAGRAM