Repair Parts

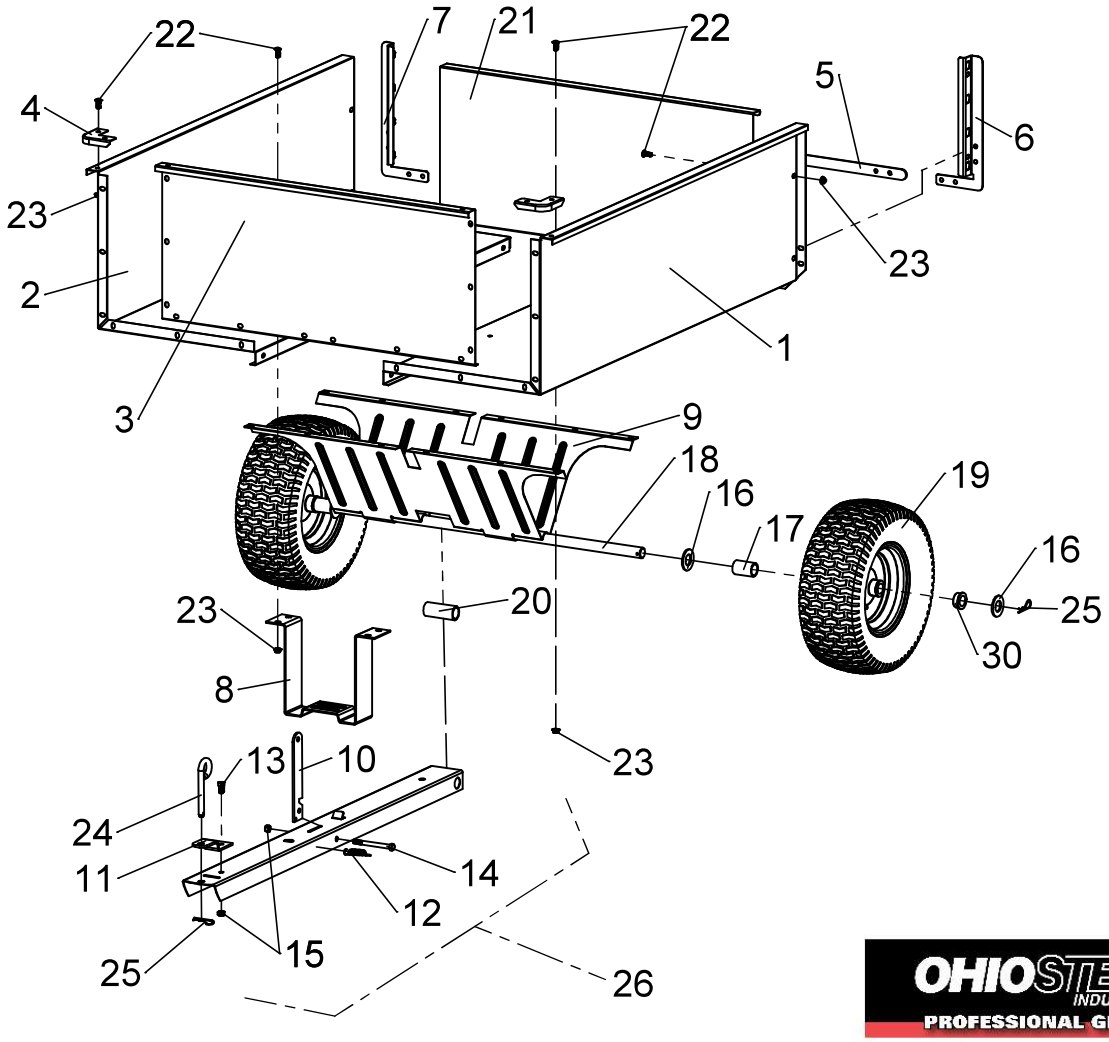

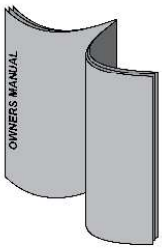

27

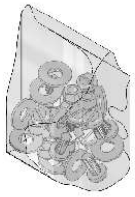

28

OHIOSTEEL INDUSTRIES
PROFESSIONAL GRADE

29

ITEM	PART NO	DESCRIPTION	QTY	ITEM	PART NO	DESCRIPTION	QTY
1	401023	BODY HALF, LEFT	1	16	300076	WASHER, 1" SAE	4
2	401013	BODY HALF, RIGHT	1	17	6000382	SPACER, SHORT	2
3	401032	FRONT GATE	1	18	300002	AXLE	1
4	401051	CORNER	2	19	300013	WHEEL	2
5	401132	BAR SUPPORT, REAR	1	20	6000463	SPACER, LONG	1
6	401081	RETAINER GATE, LEFT	1	21	401042	TAILGATE	1
7	401071	RETAINER GATE, RIGHT	1	22	300054	SLOTTED TRUSS BOLT, 5/16-18 X 3/4"	50
8	401091	SUPPORT, FRONT	1	23	6000418	SPINNER GRIP NUT, 5/16-18	50
9	401062	UNDERCARRIGE	1	24	6000533	PIN, HITCH	1
10	401111	LATCH POST	1	25	300084	HAIRPIN COTTER	3
11	401121	BRACKET, HITCH	1	26	501013	DRAWBAR ASSY. (incl. 10-15)	1
12	300131	SPRING, LATCH	1	27	6000784	OWNERS MANUAL	1
13	300052	HEX BOLT, 3/8-16 X 3/4"	1	28	6000699	HARDWARE BOLT BAG	1
14	300053	HEX BOLT, 3/8-16 X 4"	1	29	6000162	DECAL, OSI PRO	2
15	300061	HEX NUT, 3/8-16 C-LOCK	2	30	6000810	KIT, 1" BUSHINGS (set of 4)	1