LR2FT BK Hearthside Wood Rack w/Tools



If you need assistance, please call 1-877-ENCLUME
Enclume Design Products
24 Colwell Street, Port Hadlock, WA 98339

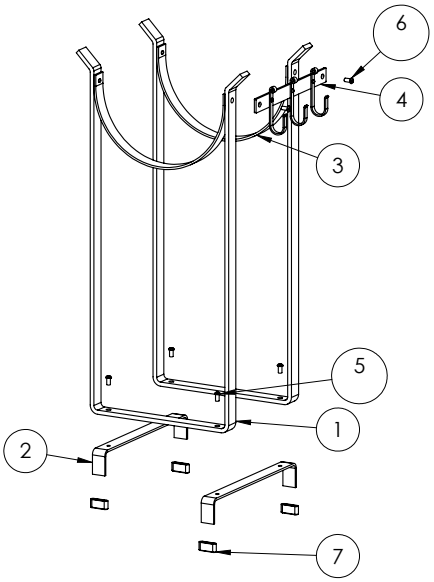

Enclosed you will find everything needed for the assembly and use of your hearth rack. Two people make assembly and installation easier. The parts and hardware included are:

Parts & Hardware:
4 – Hard Glides
4 – 3/8" x 5/8" Button head screws
2 – 3/8" x 3/4" Button head screws
1 – 7/32" Hex Key
2 – Uprights
2 – Slings
1 – Tool Bar
2 – Legs
1 – Broom
1 – Poker
1 – Shovel

ITEM NO.	PART NUMBER		QTY.
1	LR2 upright		2
2	LR2 Leg		2
3	LR2 KH		2
4	ToolBar		1
5	Button Head 3/8 X 5/8		6
6	Button head 3/8 X 3/4		2
7	Plastic Hard glides		4

ASSEMBLY INSTRUCTIONS

1. Slip the floor glides over the ends of the legs
2. Position the two upright legs pieces over the legs so they form a square. Attach the pieces together using the four 3/8" x 5/8" button head screws. The screws should be inserted from the top, tighten screws only at this point.
3. Remove the button head screw from one side of each upright holding the sling (also known as the kindling holder). Discard the screws. Loosen, but do not remove the screws on the opposite side.
4. Attach the tool holder to the outside of the uprights using the 3/8" x 3/4" screws. Screws need to be installed from the outside through the tool holder, through the upright, and into the sling / kindling holder. Repeat process for the other upright.
5. Square up rack and tighten ALL screws at this time.
6. Hang tools on tool holder hooks.

You may clean the rack periodically so dust and debris do not accumulate. Products should be cleaned with a soft cloth, using mild soap and water, and dried immediately.

Warning: It is important that your rack is assembled correctly. If the unit is assembled or used incorrectly, it could become unstable and collapse, possibly causing injury.

Limited Warranty: This product is warranted to be free of material defects for a period of five years from the date of purchase. Customer's exclusive remedy shall be the repair or replacement of the defective product and shall be subject to the following conditions: (1) notice of any defect is received by Enclume within the warranty period and (2) customer returns the defective product to Enclume Design Products, 24 Colwell St., Port Hadlock, WA 98339, postage prepaid within 20 days following a return authorization number (which may be obtained by telephoning the number at the top of this instructions) being provided to the customer by Enclume. There are no other warranties, expressed or implied. THERE ARE NO WARRANTIES OF MERCHANTABILITY OR FITNESS FOR A PARTICULAR PURPOSE. ENCLUME SPECIFICALLY DISCLAIMS ANY AND ALL INCIDENTAL OR CONSEQUENTIAL DAMAGES ARISING OUT OF THE PURCHASE OR USE OF ENCLUME'S PRODUCTS.