PURPLE LEAF

est. 2013

12' × 12' PERGOLA

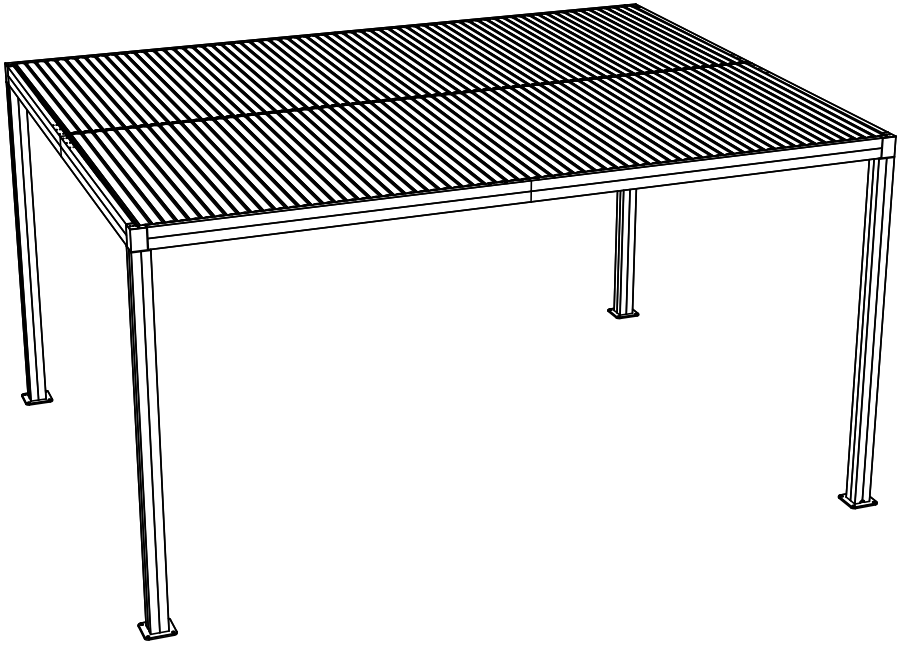

Assembly Manual

©Copyright 2013-2024 Purple Leaf Inc. All Rights Reserved

Different language instructions

If you want instructions in Spanish, French, German please contact Purple Leaf customer service.

Wenn Sie Anweisungen auf Spanisch, Französisch oder Deutsch wünschen, wenden Sie sich bitte an den Purple Leaf Kundendienst.

Si desea instrucciones en español, francés o alemán, comuníquese con el servicio de atención al cliente de Purple Leaf.

Si vous voulez des instructions en français, espagnol et allemand, veuillez contacter le service à la clientèle de Purple Leaf.

Warnings and Cautions

Please retain this instruction for future usage and read carefully before assembly.

Make sure you have all the parts & hardware as the item list shows.

***2 adults or more** are recommended to install your pergola.*

Do not discard any of the packaging until you have checked that you have all the parts and pack of fittings.

Check all bolts for tightness before use, and periodically check and tighten bolts to ensure your pergola works properly.

Some parts might have sharp edges/corners. Please follow basic safety precautions to reduce the risk of hurts.

Ladder is required for the installation.

Never fully tighten the screws until you finish the installation.



To reduce personal injury and damage to your pergola, please open the louver roofs when it is in heavy wind or heavy snow.

CHOKE HAZARD

THIS ITEM CONTAINS SMALL PARTS WHICH CAN BE SWALLOWED BY CHILDREN.
PLEASE KEEP IT AWAY FROM CHILDREN UNDER 3 YEARS OLD AND PETS DURING INSTALLATION.

Before Assembly

Please be aware that assembly of the pergola is a complicated and involved process requiring a certain amount of technical ability and time. If you are in any doubt about assembly it is recommended you enlist the help of a qualified tradesperson.

It is recommended that assembly should be conducted by a minimum of 2-3 people. Certain stages of the assembly will require the use of multiple step ladders and, if securing into concrete or other solid ground you will require a masonry drill.

It is important that you carefully measure and mark out the location of the Pergola posts.

The Pergola must be located on flat, level ground and the posts positioned equally apart.

Failure to do the above may result in sub-optimum operation of the mesh sidewalls.

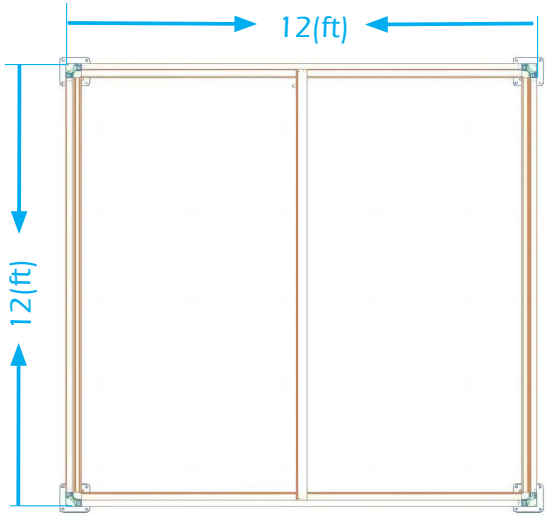

Upward View

Care and Cleaning

Wash frame parts with mild soap and water, rinse thoroughly. Dry frame completely.
Do not use bleach, acid, or other solvents on the frame parts.
Please inspect and tighten all bolts or fasteners on a regular basis to ensure proper performance and safety of your pergola.

Warranty

Frames

Frames constructions are warranted to be free from defects in material and workmanship for 1 year from item purchased. Damage to frame from negligence won't be covered by this warranty.

Bolts & Nuts

Bolts and nuts are warranted to be free from defects in material and workmanship for 1 year from item purchased. Damage from exposure to chemicals (including not only oils, spills, fluids) won't be covered by this warranty.

Warranty Limitation

This warranty is for the original purchase order only. (Order number required). This warranty is non-transferable. Purple Leaf is responsible for the free replacement part including shipping charges for the 1 year warranty.

Warranty Exclusion

This warranty does not cover products subject to negligence, abuse usage, inappropriate installation. Purple Leaf reserves the right to explain warranty exclusions. When the replacement item is applied, the 1 year warranty automatically expires. Please feel free to contact us to apply for a warranty.



Purple Leaf Inc.
15950 Boyle Avenue, Fontana
CA, 92337
pergola2@purpleleafgarden.com
©Copyright 2013-2024 Purple Leaf Inc.
All Rights Reserved.V.1