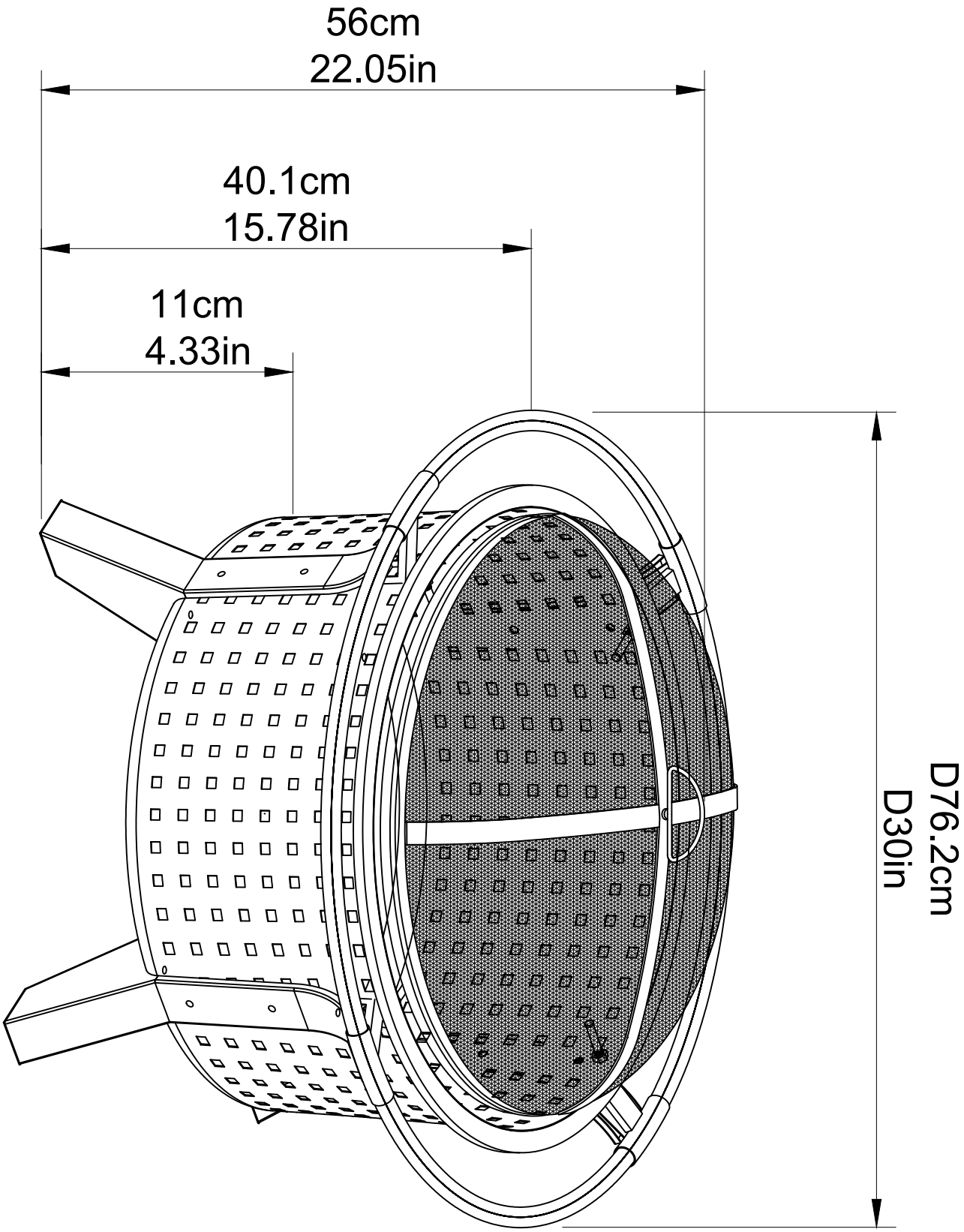
56cm
22.05in
40.1cm
15.78in
11cm
4.33in
D76.2cm
D30in