Owners Manual

TroposAir

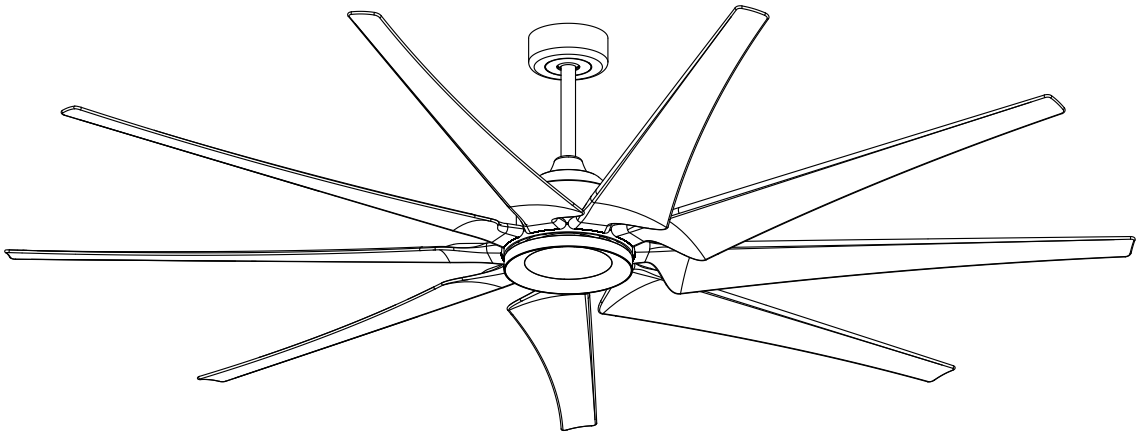

Liberator
(9TB 72"/82"+WiFi)

This instruction contains 18 pages:

Page 1: Read Safety instructions
Page 2: Unpack and inspect parts contained
Page 3~4: Notes before installation and Hanging system installation /Blade installation
Page 5: Wire connection
Page 6: Canopy installation
Page 6~9: Transmitter installation
Page 10: Operational instruction / Troubleshooting
Page 11~12: Remote Pairing Process
Page 13~18: WiFi Pairing

Intertek 3110124

Net weight

6.2 KGS.
13.6 LBS.

Toll Free: 1-855-676-7247

WARNING : Read and follow these instructions carefully and be mindful of all warnings shown throughout.

READ AND SAVE THESE INSTRUCTIONS

WARNING : TO REDUCE THE RISK OF FIRE, ELECTRICAL SHOCK, OR INJURY TO PERSONS, PLEASE OBSERVE THE FOLLOWING :

1]. To ensure the success of the installation, be sure to read the instructions and review the diagrams thoroughly before beginning.

2]. **To avoid possible electric shock, be sure electricity is turned off at the main power box before wiring.** All electrical connections must be made in accordance with local codes, ordinances and/or the National Electric Code. If you are unfamiliar with the methods of installing electrical wiring and products, require the services of a qualified and licensed electrician as well as someone who can check the strength of the supportive ceiling members and make the proper installations and connections.

3]. Make sure that your installation site will not allow rotating fan blades to come in contact with any object when fan is in operation. **Blades must mounted at least 7 feet from the floor.**

4]. If possible, mount ceiling fan on a ceiling joist - the joist must be able to support the motion and weight of the moving fan. If the fan will be mounted on a ceiling outlet box, a 4" x 2-1/8" deep METAL octagon box is required ; one UL listed as " suitable for fan support ". The box and its supporting members must not be able to twist or work loose. DO NOT USE PLASTIC BOXES. Installation on a concrete ceiling should be performed by qualified personnel.

5]. Blades should be attached after motor housing is hung and in place. Fan motor housing should be kept in carton until ready to be installed to protect its finish. If you are installing more than one ceiling fan, make sure that you do not mix fan blade sets.

6]. After making electrical connections, spliced conductors should be turned upward and pushed carefully up into outlet box. The wires should be spread apart with the grounded conductor and the equipment - grounding conductor on one side of the outlet box and the " HOT " wires on the opposite side.

7]. Electrical diagrams are for reference only. Light kits that are not packed with the fan must be UL/ETL listed and should be installed per the light kit's installation instructions.

8]. After fan is completely installed, check to make sure that all connections are secured to prevent fan from falling and/or causing damage or injury.

9]. The fan can be made to work immediately after installation. There is no need to oil your fan. The motor has permanently lubricated bearings.

10]. The fan must be turned off and stopped before reversing fan direction.

11]. **The fan is for downrod mount only.**

12] .**This fan is reversible.**

13]. **This fan is controlled by remote.**

14]. **This fan is suitable for damp location use.**

“ Special note: All green grounding wire(s) from fan must be attached to house Ground/Earth wire to prevent flickering of LED. ”

Unpack and inspect fan carefully to ensure all contents are included.

Unpack (Fan & Blades packed Separately)

Note:
Make sure you have received two boxes, one for fan and one for blades.

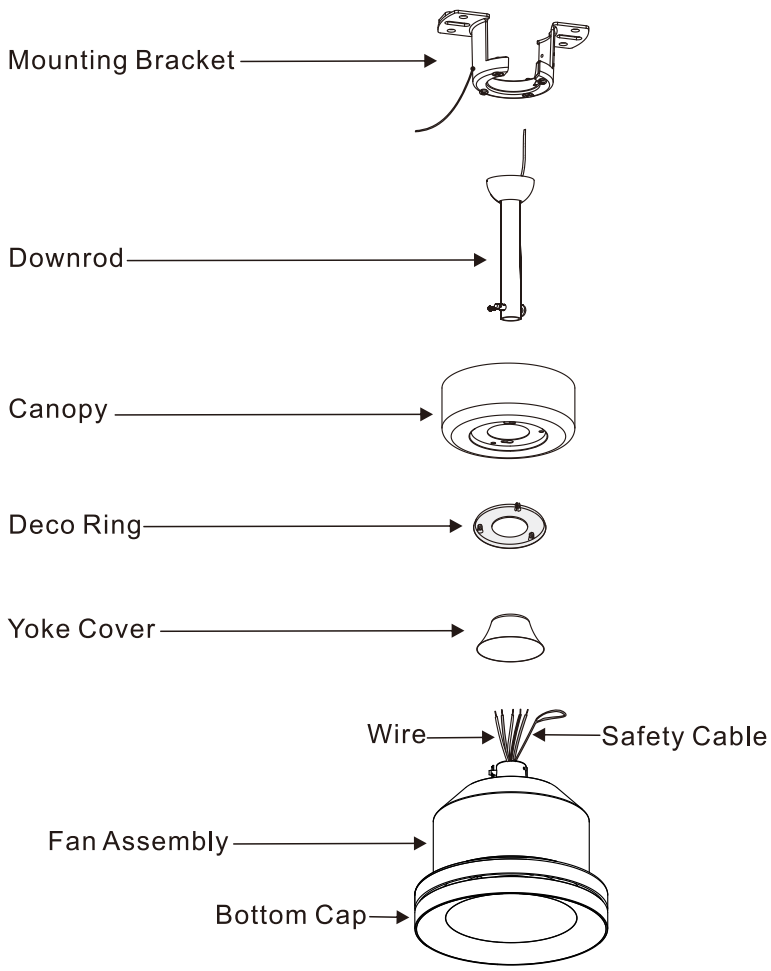

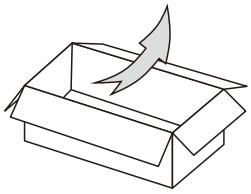

Hardware Bag

For Mounting Bracket:

Flat Washer	x3
Spring Washer	x3
Machine Screw	x2
Wood Screw	x3

For Blade Installation:

Flat washer x 28 (one spare washer included)

Blade Screw x 28 (one spare screw included)

For Blade Balance :

Balanced Slide x 1

Weight Block (5G x 6)

For Wire Connection:

Wire Nut x 8

Remote Control

Hand-Held Transmitter

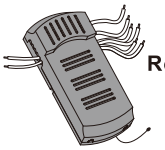

Recevier

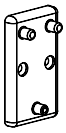

On-Wall Bracket
(also includes self tapping screw for permanent install)

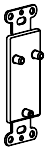

Decora In-Wall Bracket
(also includes machine screw for permanent install)

Hardware Bag

Wood Screw x 2
(For On-Wall Bracket)

Wall Anchor x 2
(For On-Wall Bracket)

Wire Nut x 3

Self-tapping screw x 1
(For battery cover)

Self-tapping screw x 1
(For On-Wall Bracket with permanent install)

Machine screw x 1
(For Decora In-Wall Bracket with permanent install)

12V(A23) Battery x 1
(Packaged with Transmitter)

Blade Set (packed separately)

(72" or 82" Resin blades)

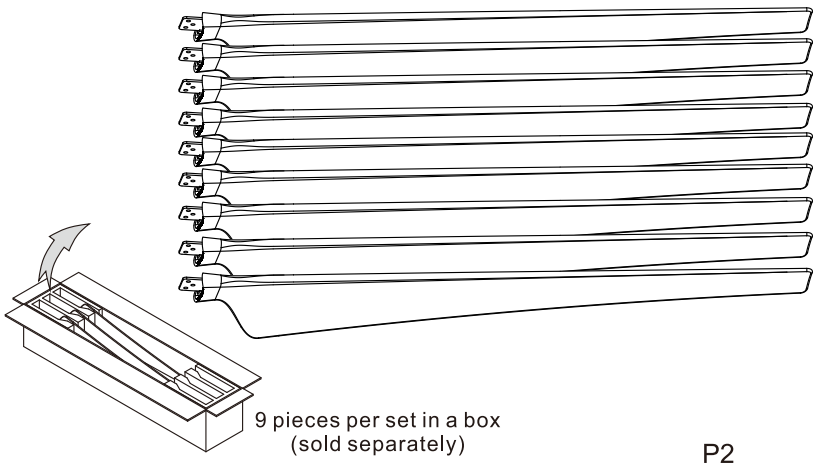

9 pieces per set in a box
(sold separately)

WARNING: BLADES SHOULD BE AT LEAST 7 FEET FROM FLOOR

Note 1:
Turn off power at breaker box to avoid possible electrical shock.

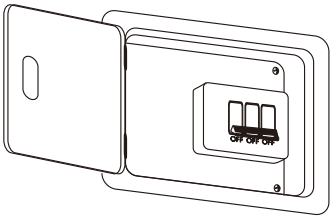

Note 2:
Use metal outlet box suitable for fan support.
Outlet box must support 35 lbs min.

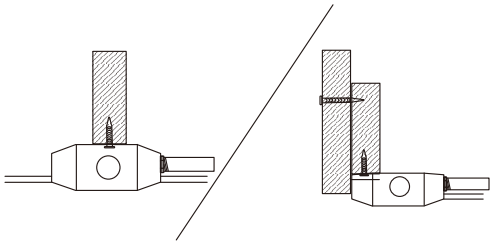

1. HANGING SYSTEM INSTALLATION

Installing mounting bracket to ceiling outlet box

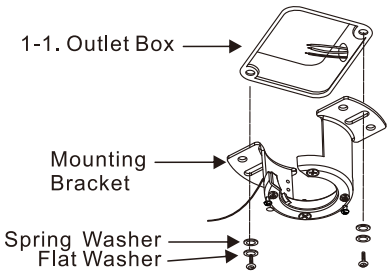

1-1. Install mounting bracket to outlet box on ceiling by using screws included with the outlet box and washers from the hardware bag.

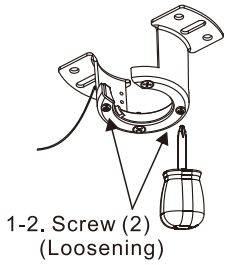

1-2. Loosen the screws at mounting bracket.
Do not remove.

2. DOWNROD INSTALLATION

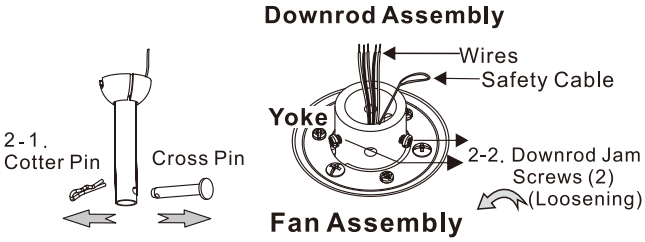

2-1. Remove cross pin and cotter pin from downrod.
2-2. Loosen 2 downrod jam screws at yoke.

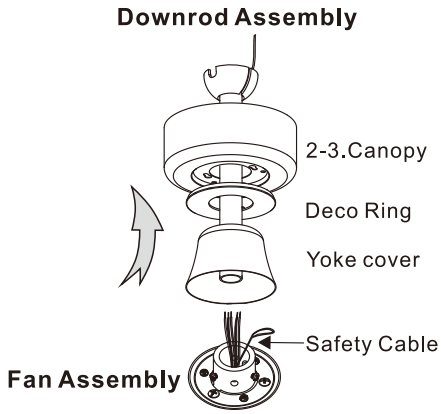

2-3. As shown above, insert yoke cover, deco ring, canopy onto downrod.

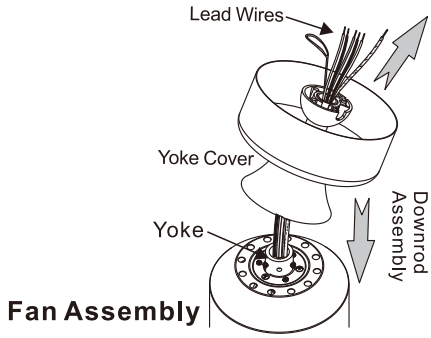

2-4. Insert the lead wires through the downrod assembly.

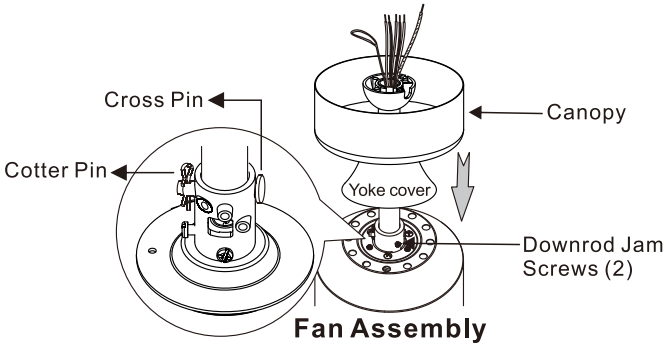

2-5. Insert downrod assembly into yoke and attach the cross pin through yoke & downrod, secure with cotter pin.

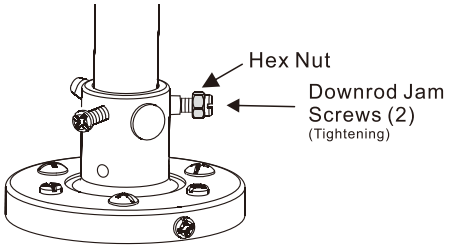

2-6. Make sure the position of the Hex nut must be on side of jam screw head, before tighten jam screw.
2-7. Tighten 2 jam screws to secure downrod.

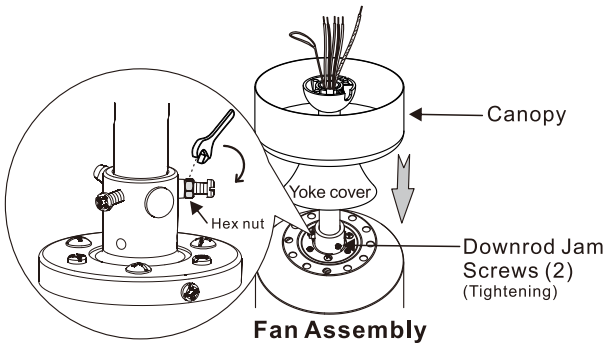

2-8. Use spanner to tighten the Hex nut, so the jam screw will not loose.
2-9. Pull down the yoke cover to cover yoke.

3. HANGING THE FAN ONTO MOUNTING BRACKET

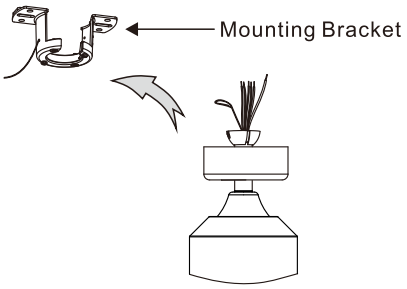

3-1. Lift fan assembly onto mounting bracket.

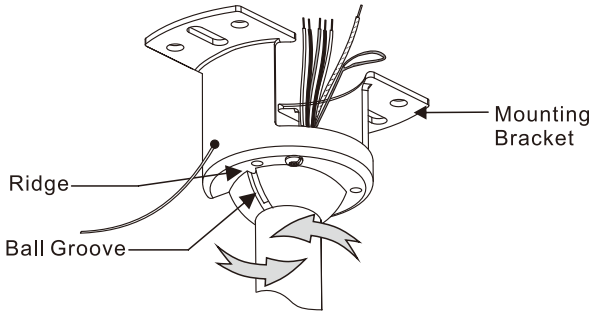

3-2. Rotate fan so that the groove on the ball engages the ridge in the mounting bracket.

IMPORTANT Attaching safety cable to ceiling joist

Use wood screw, spring washer, and flat washer from hardware bag. Pass wood screw through closed loop of safety cable. **Secure wood screw to ceiling joist through any available slot on mounting bracket. Make sure safety cable has been tightened securely.**

CAUTION: THE WOOD SCREW AND ITS SUPPORT MUST BE ABLE TO FULLY SUPPORT THE WEIGHT OF AT LEAST 100 LBS.

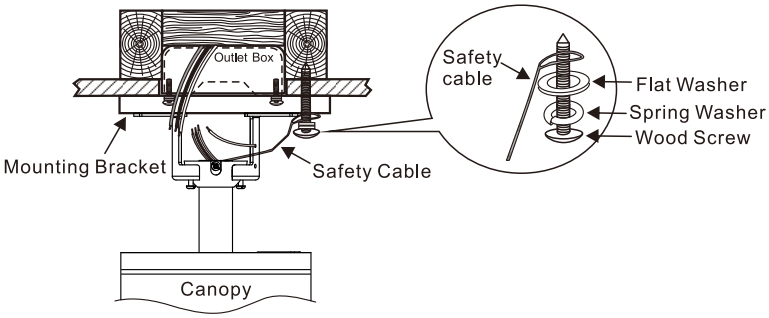

4. BLADE INSTALLATION

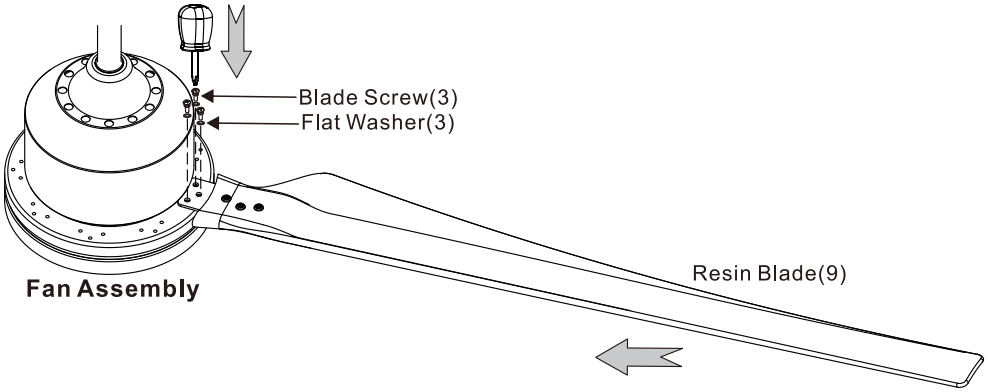

Attach blade to fan assembly by using flat washers & blade screws provided from hardware bag.
(* Repeat until all 9 blades are installed firmly.)

***Note: Make sure all blade washers & screws are tightened to avoid operating noise.**

5. WIRE CONNECTION

5-1. Verify that serial Number & Model Number match on the Receiver and Transmitter

NOTICE:

Many remote sets for DC fans look the same. This remote set is pre-paired and labeled at the factory, please note the following before operation:

1a. The Remote Model Number on transmitter and receiver must be the same.

1b. The Remote Serial Number will be the same on a pre-paired remote set. If it is different, it will need to be paired (See page 11)

2. The Fan Model Number label must be the same as the fan's model number in front page (9TB) for proper operation.(There is no Fan Model Number on transmitter.)

3. Do not mix the remote sets if you are installing more than one fan.

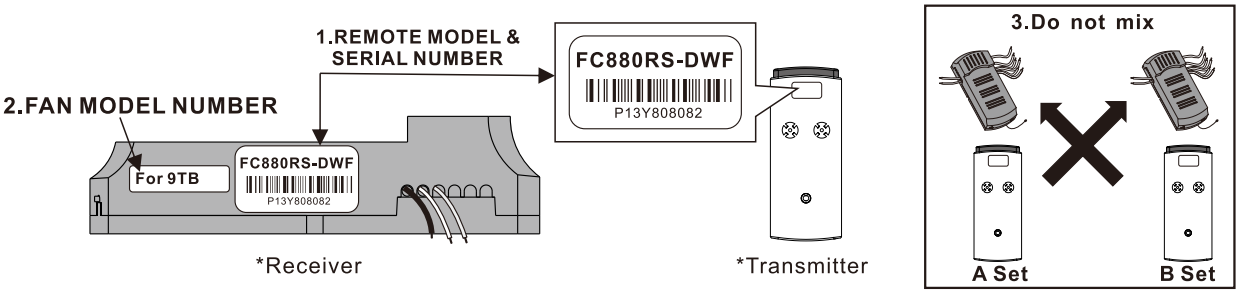

5-2. Insert receiver into mounting bracket

NOTE: Do not squeeze all the wires while inserting the receiver into the mounting bracket.

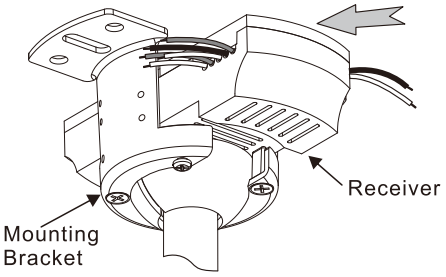

5-3. Making electrical wire connection

The standard lead wire is 54" long.
You may need to cut all 5 lead wires (from motor) to proper length & strip them for wire connection to make it easier for Canopy installation.

Follow diagram below and make sure that all exposed wires are secured inside wire nuts.

Note : Wires from house may vary in color. If the house wires do NOT include a ground wire (green) AND the optional #610 LED Light Kit is being installed, to prevent flickering, this unit must be grounded/earthed to the home's ground/earth; please consult an electrician.

After wiring is completed, gently push wires into junction box with wire nuts pointing upward.

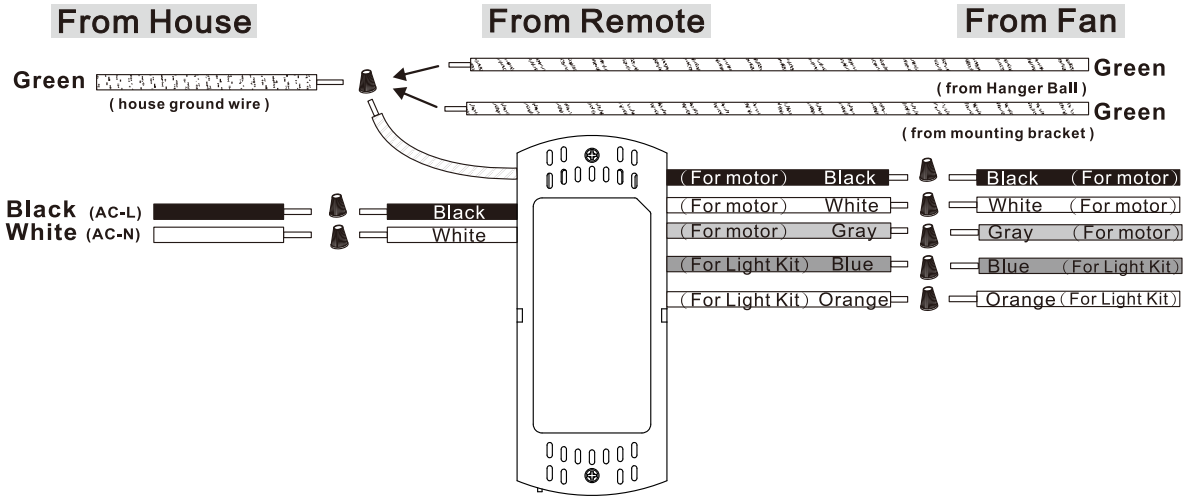

" Special note: All Green grounding wires, from Hanger ball/Mounting bracket/Receiver, must be well attached to House Ground/Earth to prevent flickering of LED. "

6. CANOPY INSTALLATION

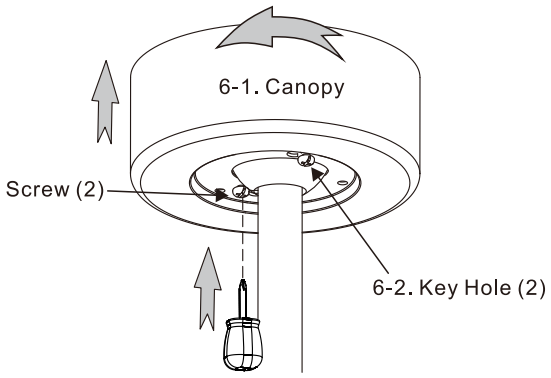

Note: Two screws are installed on mounting bracket for canopy installation.

6-1. Push up canopy until two pre-installed screws on mounting bracket are engaged with two key holes on canopy.

6-2. Rotate canopy slightly until two pre-installed screws heads are engaged in the narrow end of key holes.

6-3.Tighten both screws.

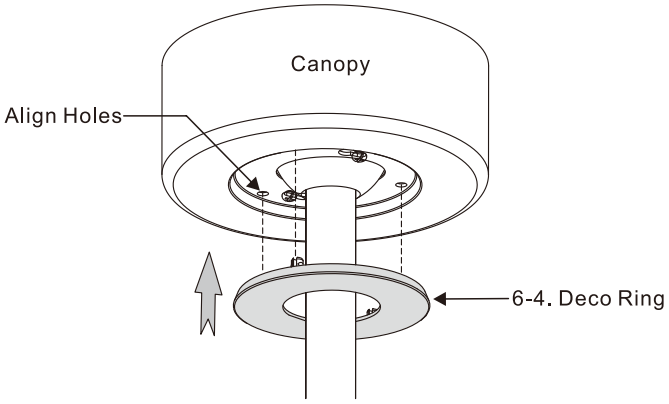

6-4. Push deco ring up to canopy, align holes on canopy with ribs on deco ring, and push “snap-in”.

7. TRANSMITTER INSTALLATION

The enclosed Transmitter can be mounted in many ways:
1. On-Wall at any convenient location, see Section (2) next page.
2. In-Wall in US switch boxes (multi-gang and single-gang decora), see Section (3).
3. Either way can be still used as a Hand-Held transmitter, or
4. It can be Permanently Stationed either On-Wall or In-Wall, see Section (4).

(1) HAND-HELD ASSEMBLY

1-1. Open the front cover of Hand-Held.

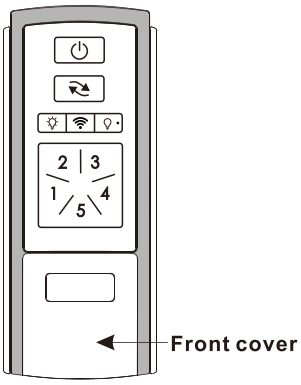

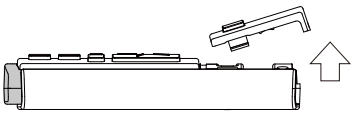

1-2. Install the 12V battery. (provided)
1-3. Note the location of the Dimmer/On Switch. (Factory default is set to Dimming)
Set dip switch in **D** position for LED Dimming.
Set dip switch in **O** position for LED ON/OFF only.

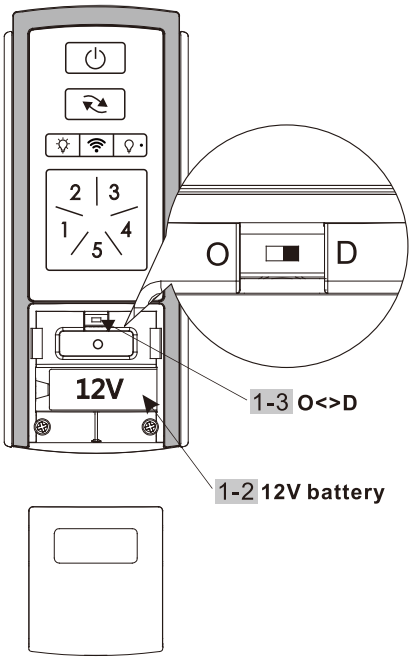

1-4. Reinstall the front cover and secure into place using the small self-tapping screw from the hardware bag.

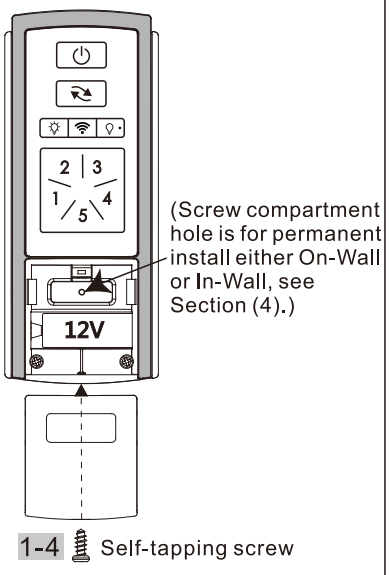

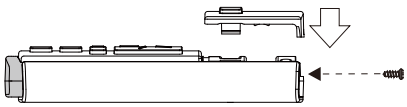

A. On-Wall Mount

(2) ON-WALL BRACKET INSTALLATION

2-1. Position the bracket on the wall where desired, with the single post at the bottom as shown, secure the bracket with the two Wood Screws provided. (Wall anchors are for concrete wall.)

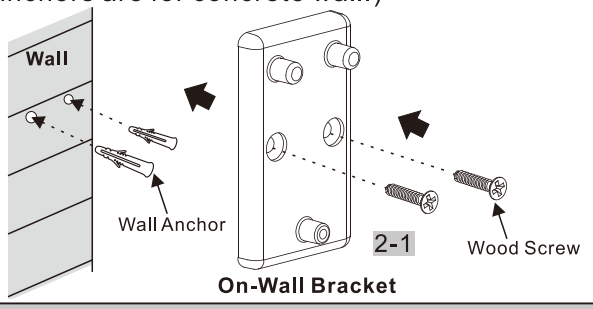

2-2. Snap the Hand-Held onto the On-Wall Bracket by aligning 3 posts to three recessed holes in back of Hand-Held.

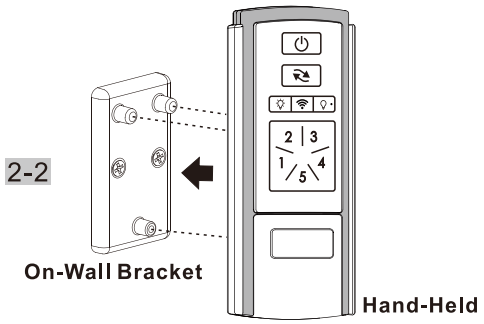

IMPORTANT: Single post of wall bracket must be downward.

You have completed the Wall mount installation.

B. Decora In-Wall Installation (for U.S.A.)

(3) DECORA IN-WALL INSTALLATION (USA)

Warning: Turn off power at breaker box to avoid possible electric shock.

3-1. Remove the wall plate by loosening screws from the wall plate. (Keep these screws for step 3-6.)
Note: Can be installed in single- or multiple-gang switch box.

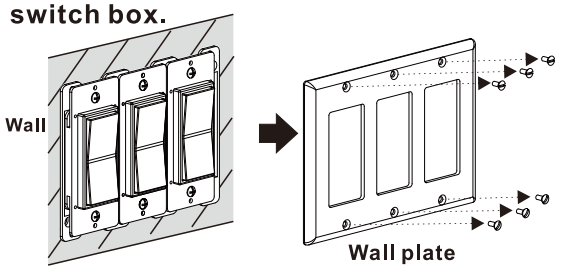

3-2. Uninstall the wall switch from the switch box by removing two screws from the switch box. (Keep these screws for step 3-5.)

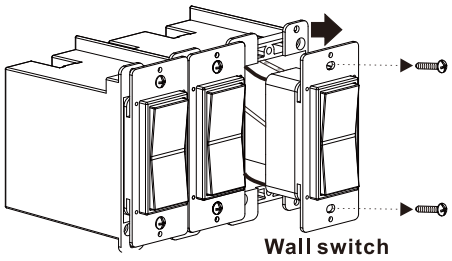

Warning: Make sure the power is turned off at the breaker box before touching anything in this box.
Caution: *If you are uncomfortable identifying and connecting 120V AC wiring connections, we recommend you hire a licensed electrician to perform this installation.*

Caution: *The following wiring instructions are valid for a simple on/off toggle switch in a single gang box.*
Caution: *If your switch has more than two wires (not counting any ground wire or jumpers), we recommend hiring a licensed electrician to identify and complete the wiring connections.*

3-3. Remove the wall switch from the switch box, and disconnect the following wires from the wall switch:
① Remove Black wire that goes to ceiling junction box
② Remove Black wire(s) that come from AC source

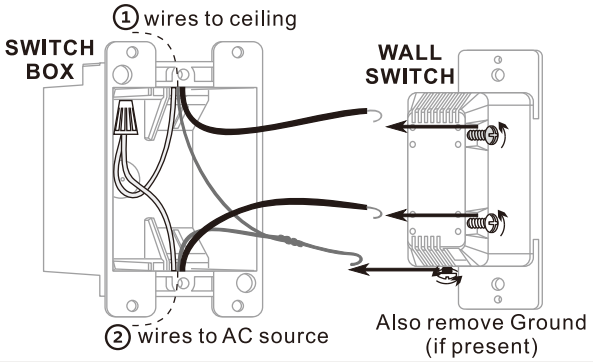

3-4. Connect the Black wire that goes to the ceiling box to the Black wire(s) from the AC source using the wirenuts provided.

Note: Ground wires are usually twisted together in the box and do not require wire nut. If your ground wires are separated, connect them with a provided wire nut.

Note: The White wires (neutral) should remain tucked in the back of the box.

Note: Make sure that all exposed wires are secured inside wire nuts. Carefully tuck wires neatly back into switch box.

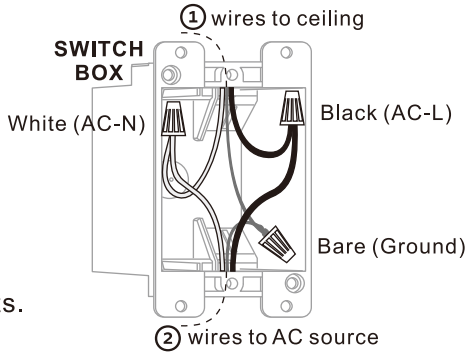

IMPORTANT: FAN'S REMOTE RECEIVER IS NOW DIRECTLY CONNECTED TO AC POWER. ON/OFF IS NOW OPERATED BY REMOTE TRANSMITTER.

3-5. Install the Decora In-Wall bracket onto the switch box with the single post at the bottom as shown, and attach two screws removed from step 3-2.
(If in a multiple-gang box - align the bracket using the wall plate first, then tighten the screws.)

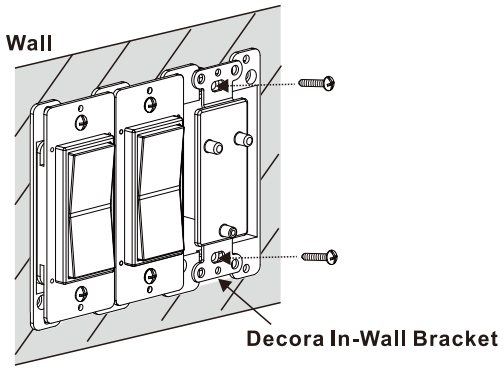

3-6. Install the wall plate onto the switch box and attach the screws removed from step 3-1.

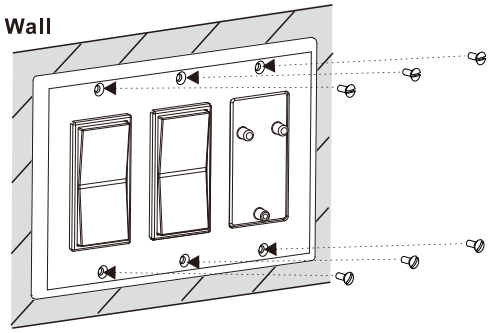

3-7. Snap the Hand-Held onto the In-Wall Bracket by aligning 3 posts to three recessed holes in back of Hand-Held.

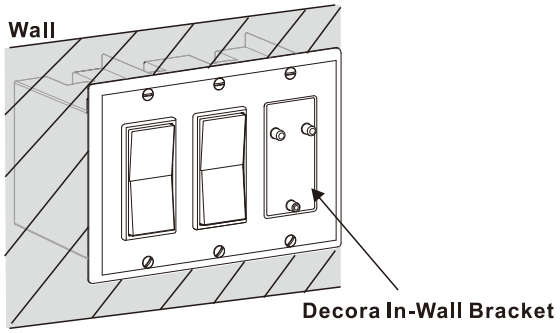

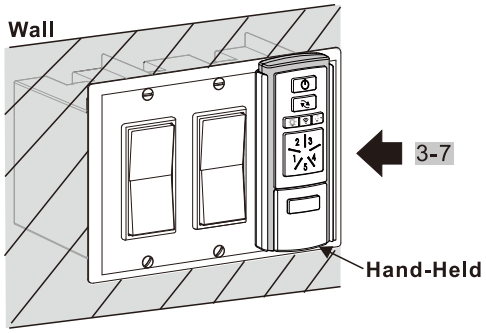

You have completed the mounting bracket installation.
The next section (4) details how to make it a Permanently Stationed control.

(4) FOR PERMANENTLY STATIONED CONTROL

(For school, hotel or public facility so the hand-held cannot be easily removed.)

4-1.Open battery cover of Hand-Held by removing the self-tapping screw.

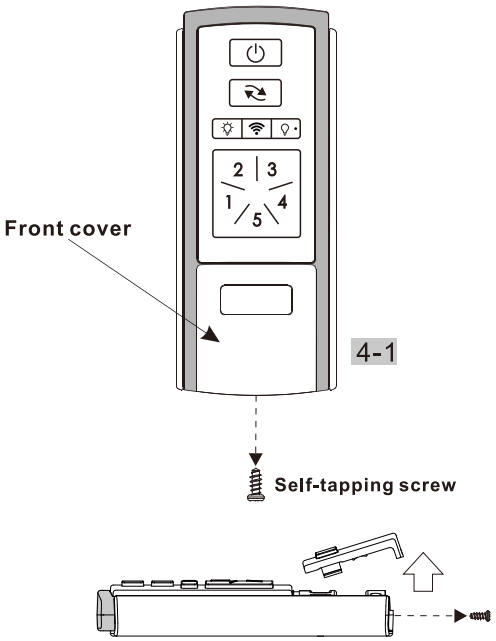

4-2.
Using the proper screw for the bracket used, attach the Hand-Held to the bottom post of the bracket through the screw compartment hole.

A. On-Wall Bracket: Use provided self-tapping screw.
B. In-Wall Decora: Use provided machine screw.

A. On-Wall Bracket

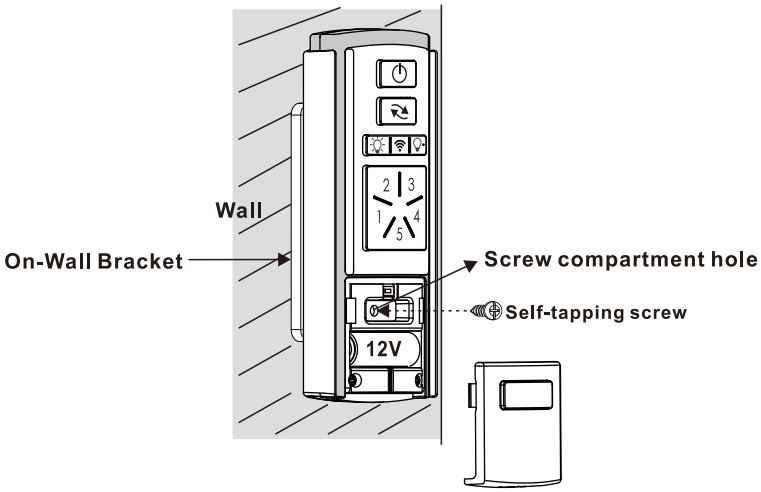

B. In-Wall Decora

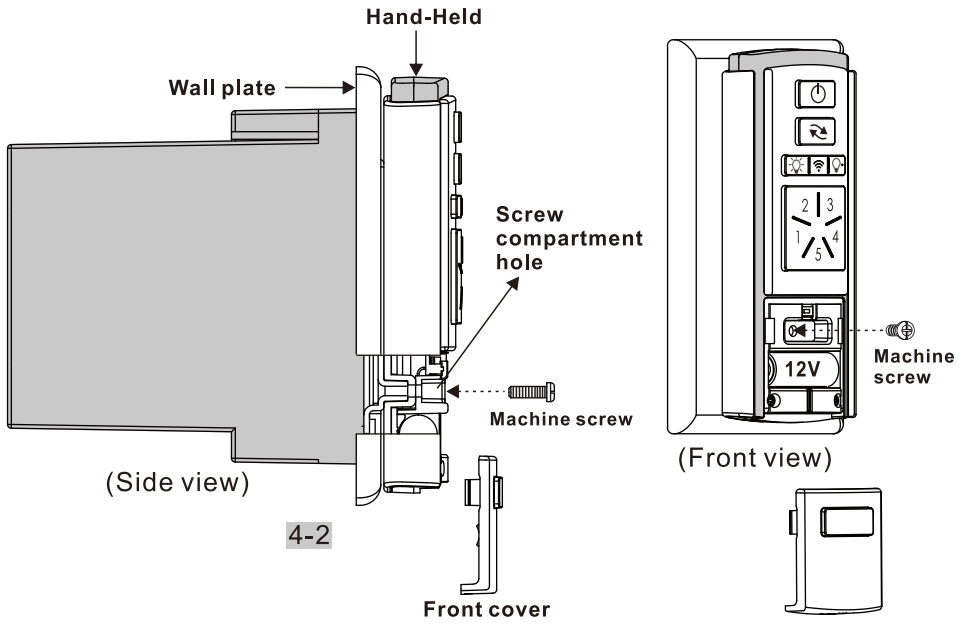

4-3. Snap the cover back onto the transmitter and secure with small self-tapping screw removed in step 4-1.

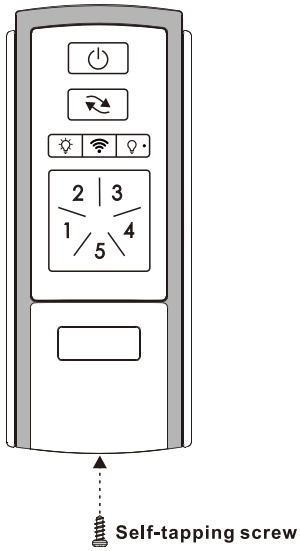

Turn on the power at breaker box, the fan is ready for operation!

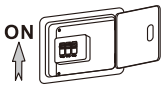

(5) OPERATIONAL INSTRUCTION

Warning: DO NOT PRESS THE ⏻ BUTTON FOR MORE THAN 4 SECONDS TO AVOID FACTORY RESET AND THE LOSS OF PRE-PAIRED PROGRAMING OF RECEIVER AND TRANSMITTER!

All the button pressed will have a Beep sound and the red indicator light will turn on.

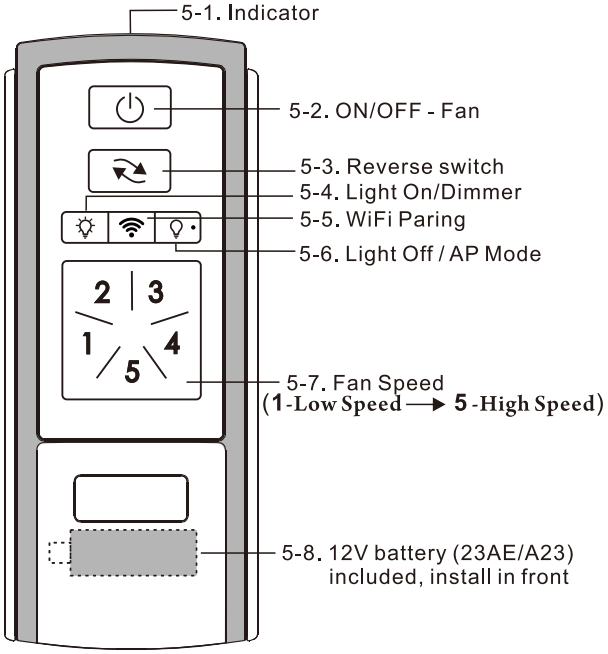

5-1. Indicator
5-2. Press ⏻ button to turn the fan ON/OFF.
Note: On every startup, the fan will move forward & backward for 2~3 seconds.

5-3. Reverse switch
5-4. Short press for Light ON.
Hold the button for dimming the light.
5-5. WiFi paring
(long press for 5 seconds, see more information for WiFi setting in step 9.)

5-6. Short press for Light Off / **AP mode.**
(long press for 5 seconds, see more information for WiFi setting in step 9.)

5-7. Fan Speed:
1- Low Speed → **5-** High Speed
5-8. 12V battery (23AE/A23) included, install in front.

NOTE: Make sure the DIP switch is on dimming position. (See 1-3 in Page 6)

Note: Press ⏻ button to turn the fan ON/OFF. The remote retains the last settings (fan speed and light dimming level) in memory. Switch the fan ON/OFF by main power will operate at initial setting. (fan off and light on)

OPTIONAL LIGHT AVAILABLE

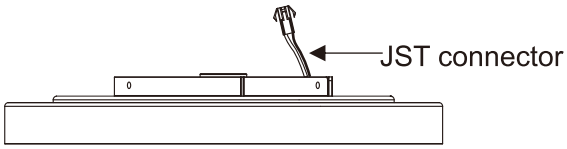

#610 Light Kit (sold separately)

Integrated type:

For Titan II & Liberator & Elegant / Troposair

TROUBLESHOOTING

In the event the fan does not operate properly, please perform the following steps.
5-9. Lower the canopy and check that all wires are connected properly.
5-10. Perform the remote Pairing Process at step 8-1 on P11.

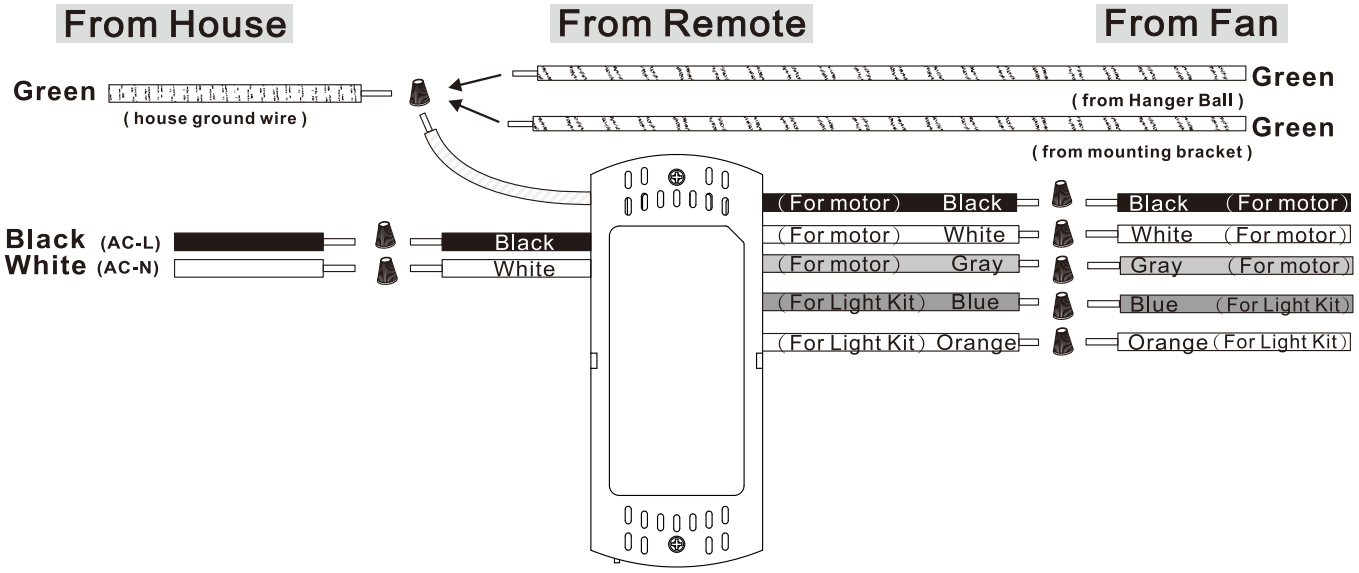

8. REMOTE PAIRING PROCESS

The Pairing Process is only necessary when there is an issue. Remote set is pre-paired from the factory and should not require the Pairing Process.

A fan may need to have "Pairing Process" performed for the following issues.

1. Replacing the transmitter.
2. Replacing the receiver.
3. Multiple fans on the same circuit.

(In multiple fans situation, each fan must be wired up individually for the Pairing Process; **see step 8-1.**)

8-1. PAIRING PROCESS FOR TRANSMITTER AND RECEIVER:

1. Switch off the main power

and make sure fan has completely stopped .
2. Install a New receiver or install the battery in a new transmitter before the Pairing Process.
3. Switch on the power again, and immediately:

Press and hold the ⏻ button for **8 seconds until the Receiver "Long Beeps".**

This process must be done within 20 seconds after switching on the power.

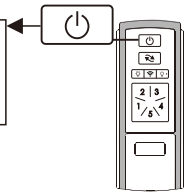

This fan has completed the pairing successfully and the fan is ready for operation!

8-2A. Pairing Process for Multiple fans (One transmitter for multiple receivers)

If you wish to use only **one transmitter for two fans**, simply wire up both fans at one time and perform the Pairing Process at **step 8-1** from a point between the two fans.

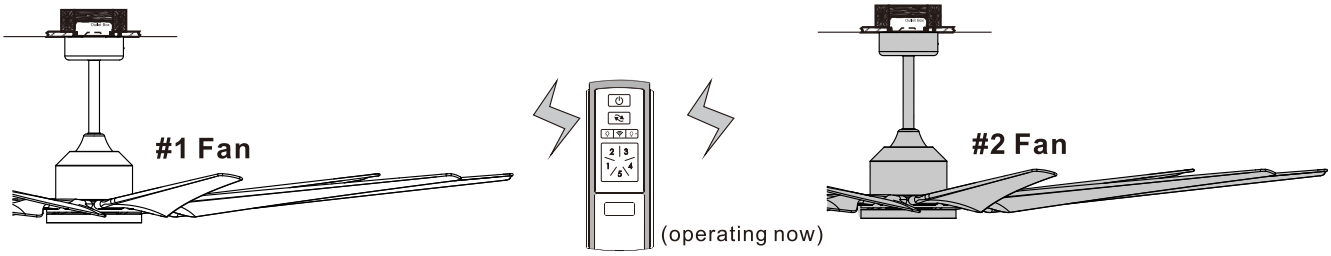

8-2B. Pairing Process for Multiple fans (One transmitter for one receiver)

The Pairing Process must be performed on each remote set (transmitter and receiver) individually.
See the set up at step 8-3.

8-3. TO SET UP REMOTE FOR #1 FAN

Make sure to turn off power at breaker box. 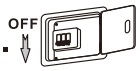

Disconnecting wire from #2 fan.

Before starting the remote control setting process, lower the canopy of #2 Fan and disconnect the Black wire. Put the wire nut on the black wire from the house

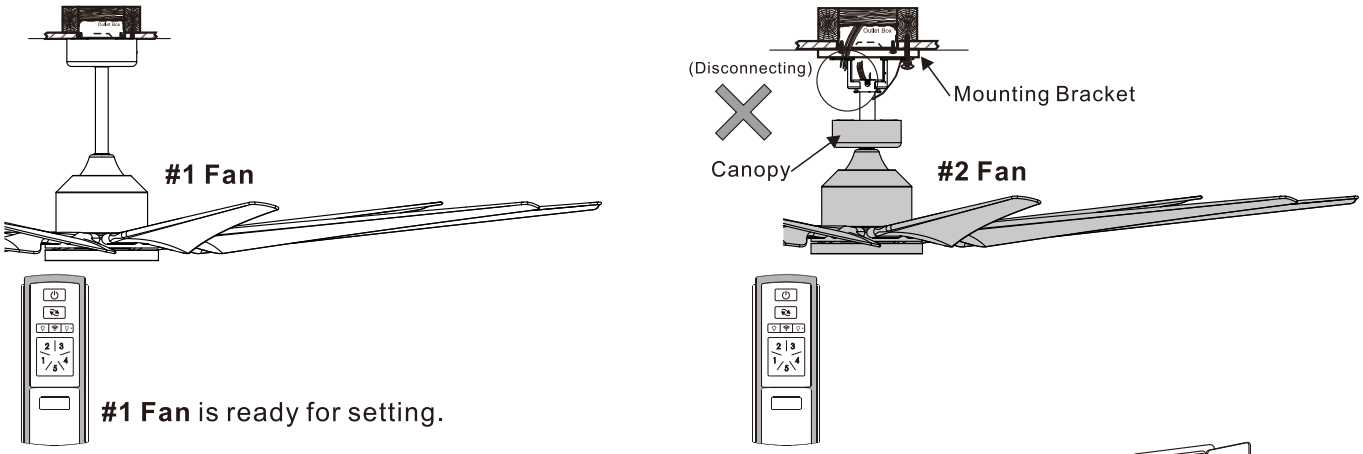

Turn on power at breaker box and #1 Fan is ready for pairing. 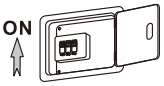

*See the remote control setting process **8-1 to set up #1 Fan.**

8-4. TO SET UP REMOTE FOR #2 FAN

Make sure to turn off power at breaker box. OFF

Disconnecting wire from #1 Fan

Disconnect the Black wires from #1 Fans and connect the Black wires back to #2 Fan that you remove from **8-3.**

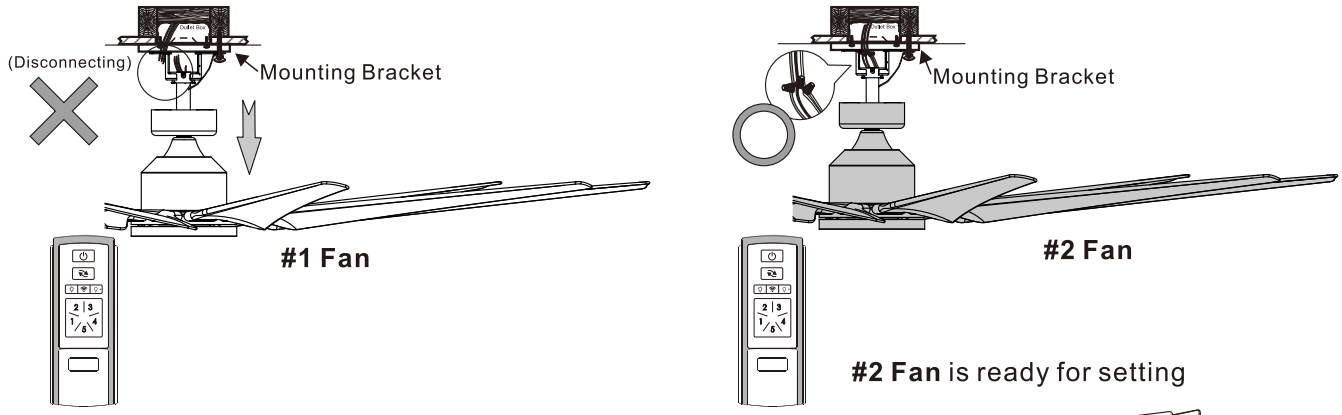

Turn on power at breaker box and #2 Fan is ready for setting. ON

*See the remote control setting process for **8-1 to set up #2 Fan.**

8-5. RECONNECT ALL FANS

Make sure to turn off power at breaker box. OFF

After all the fans have done the resetting process, reconnect all the wires for #1 fan & #2 fan, and lift up the Canopy of #1 fan & #2 fan.

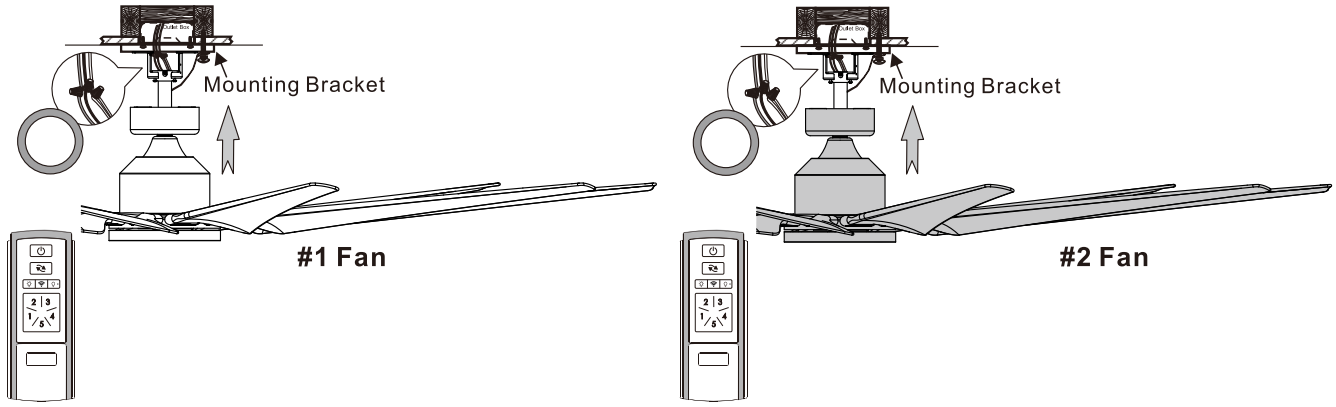

8-6. Switch on the main power and now each of these two fans are operated by its own remote individually.

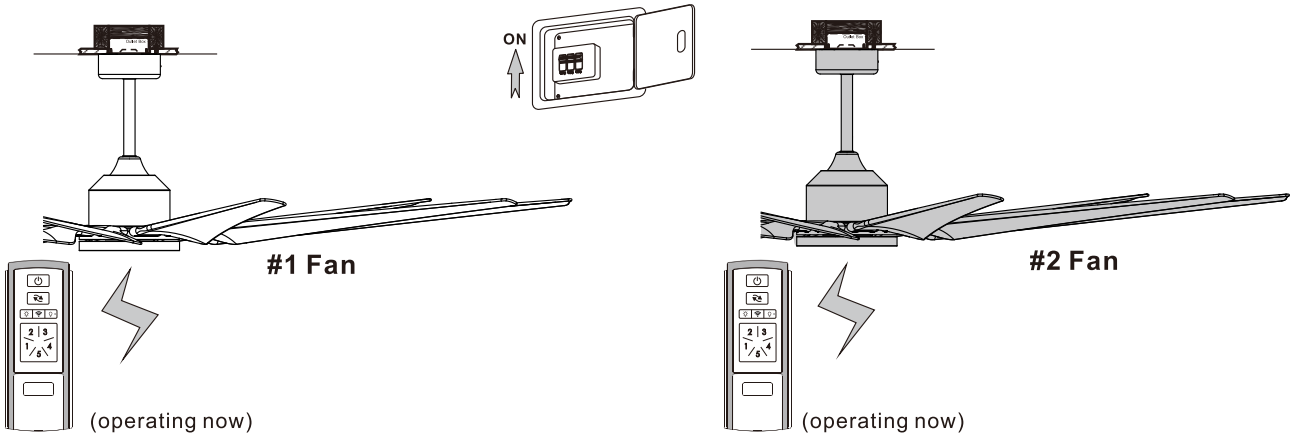

NOTE: For more than two fans, the same rules apply. Make sure only one fan at a time is connected to power when doing the Remote Setting. Already completed fans should be disconnected until all fans have completed the Remote Setting process.

9. WIFI PAIRING

A. Installation

You can scan the QR code below to download the **Smart Life** app.

You can also search **"Smart Life"** in major application markets to install the app.

B. Register an account and log in.

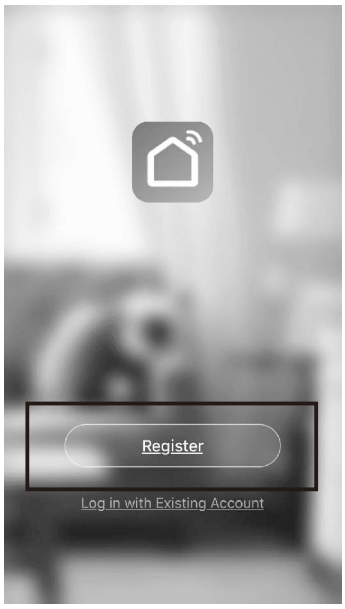

C. WiFi Connect

NOTE: You must turn on the "Location Services" before WiFi pairing.

1. First ensure that WiFi can be used normally and you have the password.
2. Click **"Add Device"**, first select **"Small Home Appliance"**, then select **"Fan"**.

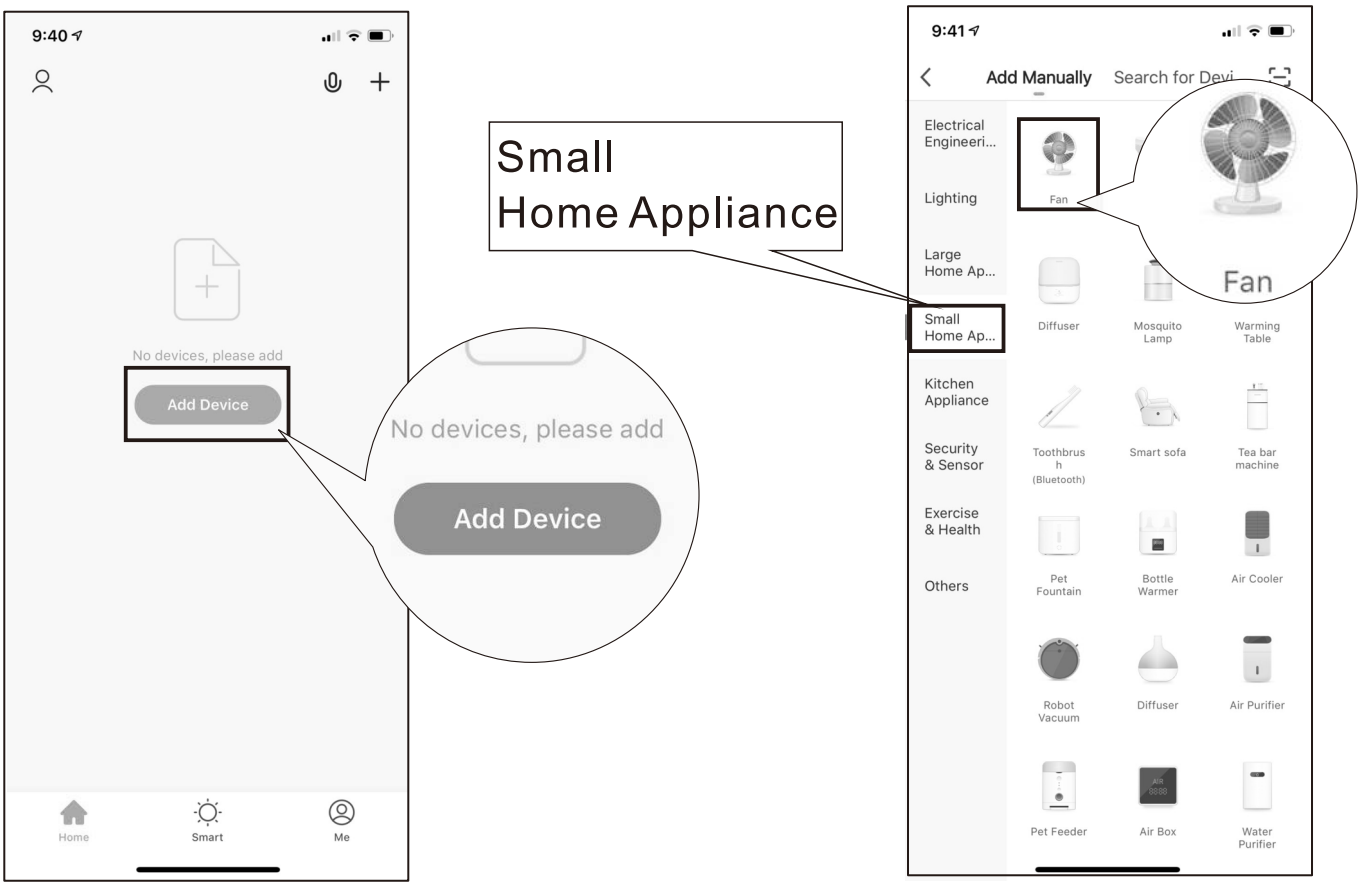

3. Press and hold the “ ” button of the transmitter for more than 5 seconds. Wait until the ceiling fan receiver emits **“BeeBee”** continuously. The remote makes this noise instead of a blinking indicator as described in the app.

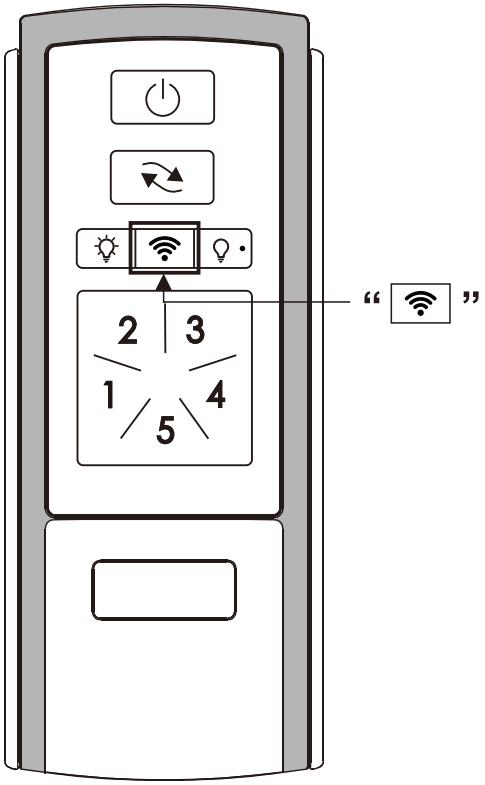

4. Select the correct WiFi source, then enter the WiFi password and click **“Confirm”** to wait while **“Connecting”**.

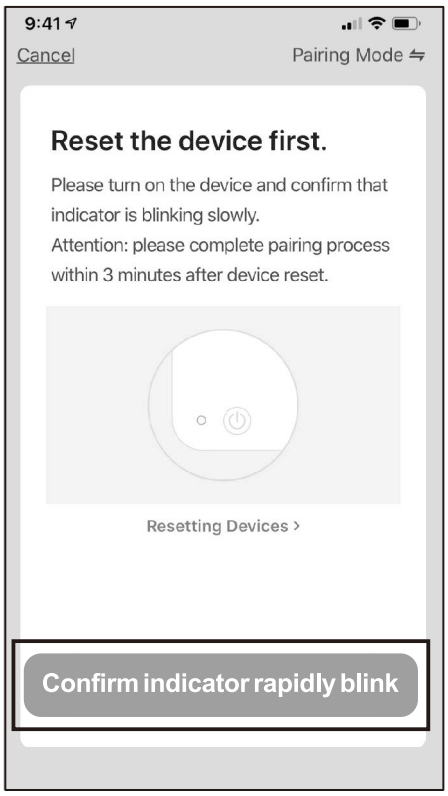

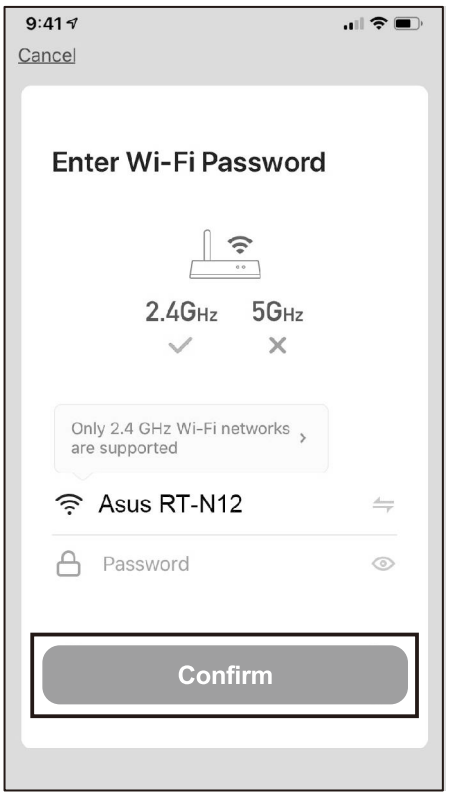

5. Wait for a successful connection.

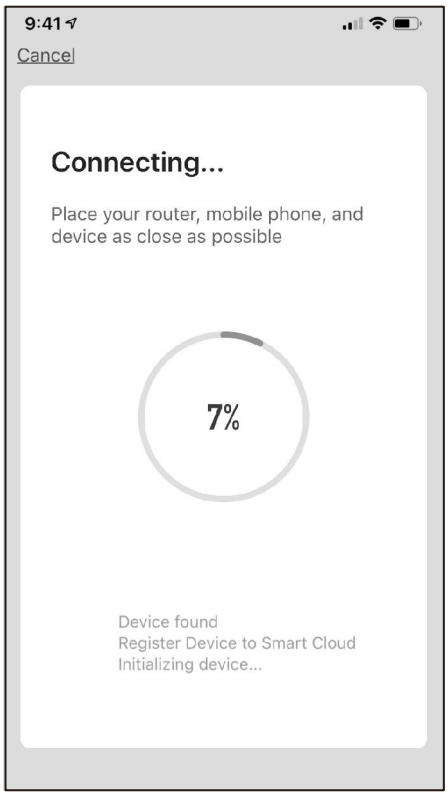

NOTE: In case of above WiFi Pairing failed, please follow below and pairing.

1. Press and hold the "" button of the transmitter for more than 5 seconds. Wait until the ceiling fan receiver emits **"BeeBee"** continuously.

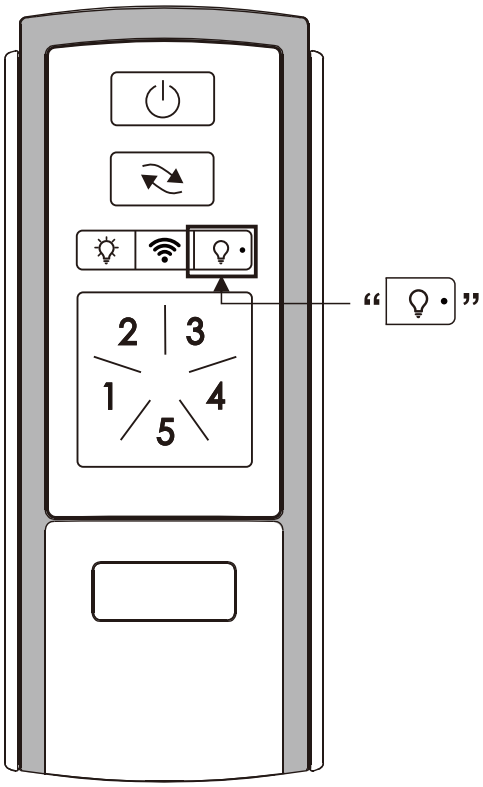

2.Select Pairing Mode **“AP Mode”** on mobile device.

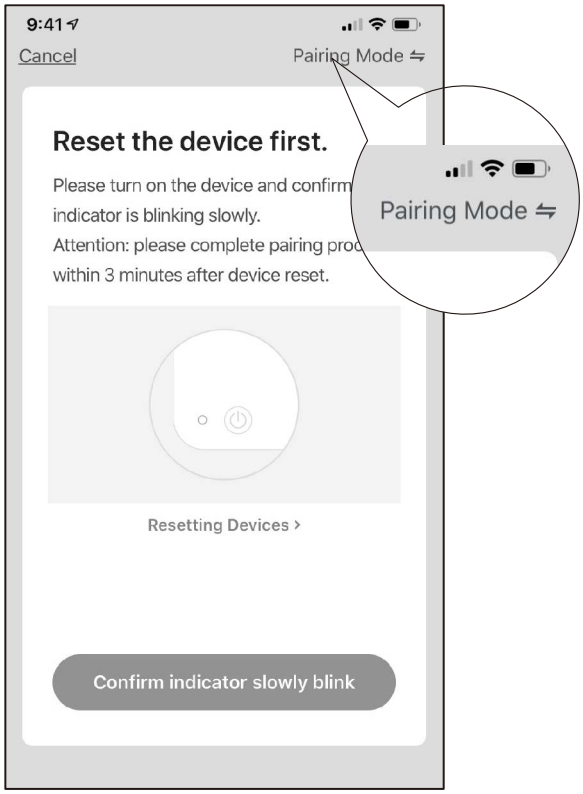

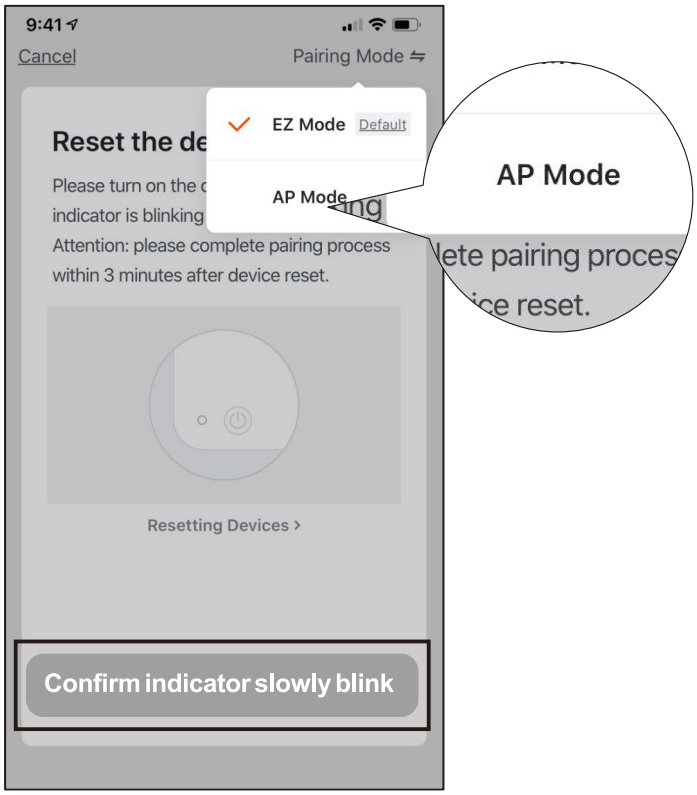

3.Select the correct WiFi source, then enter the WiFi password and click **“Confirm”** to wait while **“Connecting”**.

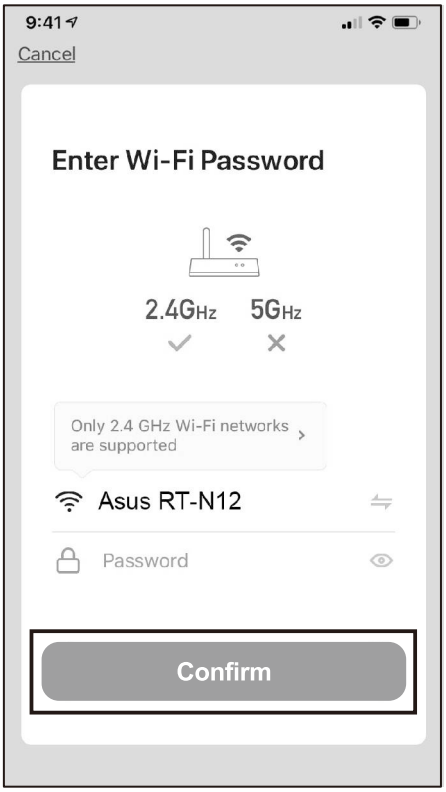

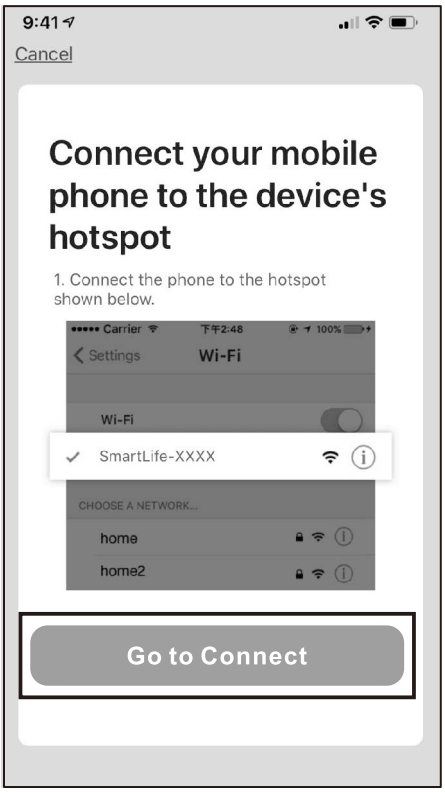

4. Wait for a successful connection.

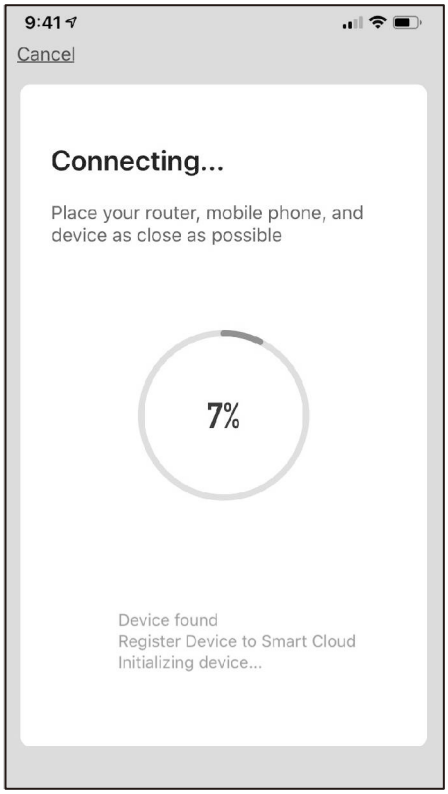

D. More Details and Multiple Users

1. In the App's Main Control Panel, click the " " in the upper right corner for more functions.
   a. Tap on the icon or name to change either.
   b. Tap **"Share Device"**, **"Add Sharing"**.

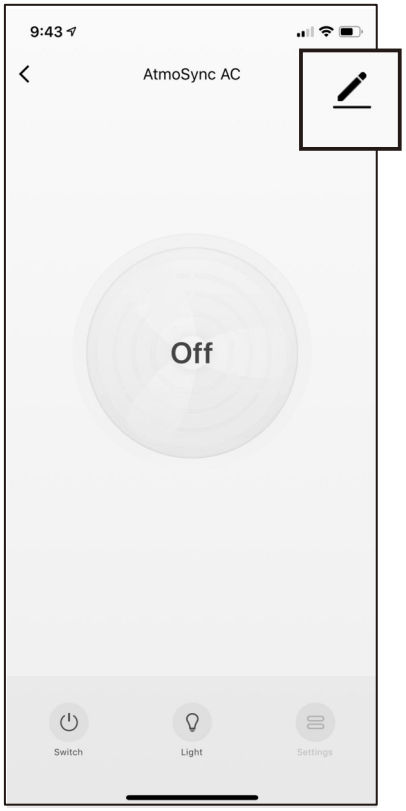

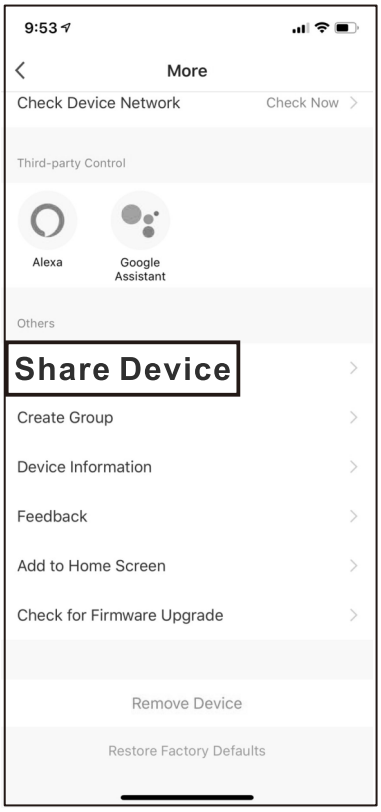

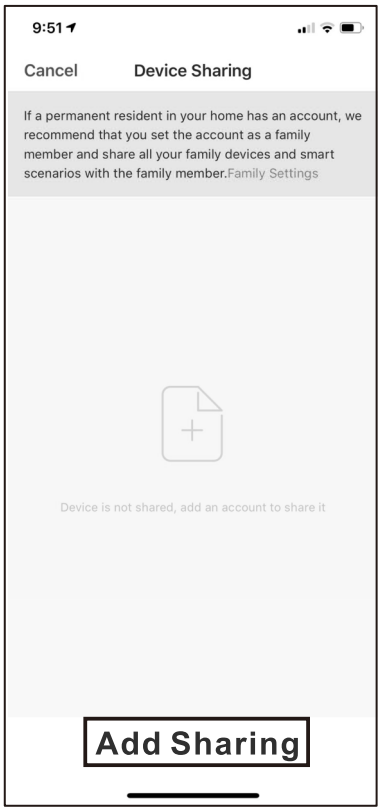

2. Enter the phone number of another Smart Life user, and click **"Completed"** to share.
Hint: The simplest way to share multiple devices with multiple users is to log in as a public account.

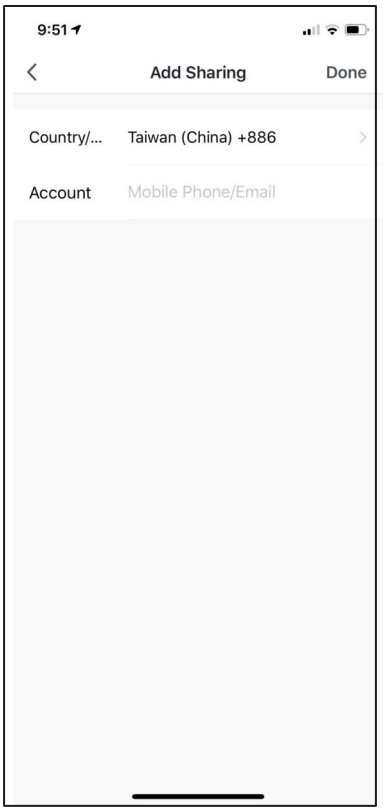

NOTE: This method requires the other users have the "Smart Life" app installed.
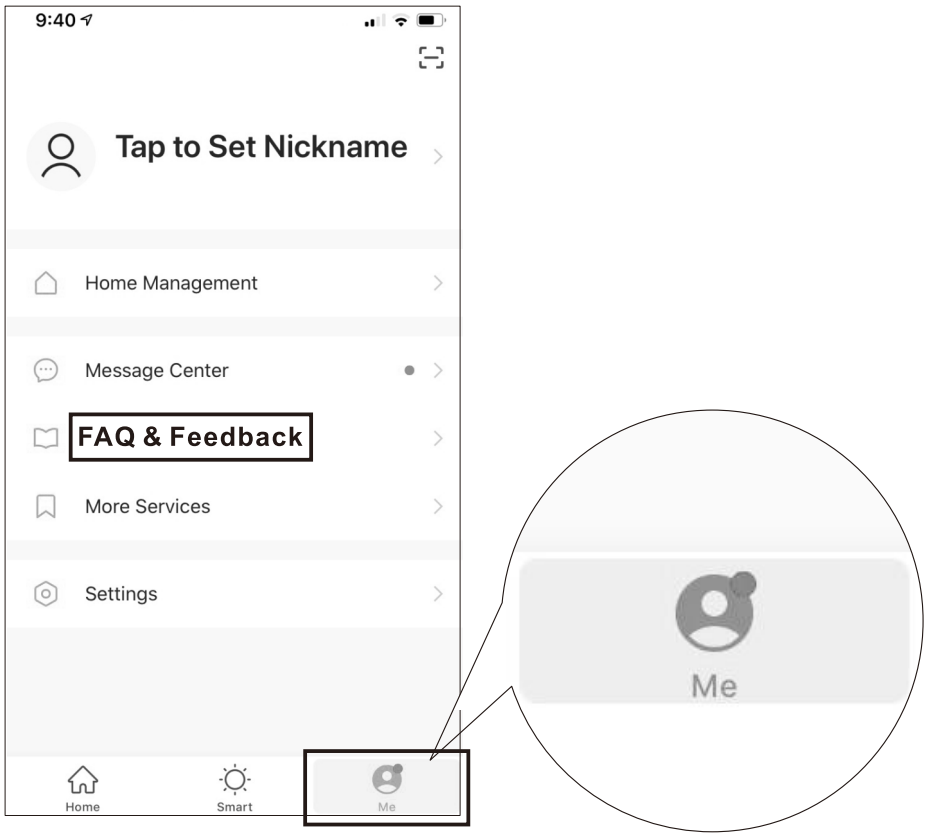
E. For more information, go to the "Me" - "FAQ & Feedback" in the app to learn.