luxier

Freestanding Floor Mount Bathtub Filler

Model Number:
FTF01-TB (Brushed Nickel)
FTF01-TC (Chrome)
FTF01-TM (Matte Black)
FTF01-TO (Oil Rubbed Bronze)

Features:
- Brass and Zinc Alloy Construction
- Single Hole Installation
- Drip Free 40 mm Ceramic Cartridge
- Hand shower flow rate 1.8 gpm at 80 psi
- Tub spout flow rate 3.7 gpm at 20 psi
- Rough-in kit included

- Complies with:
  IAPMO / UPC / cUPC
  ADA

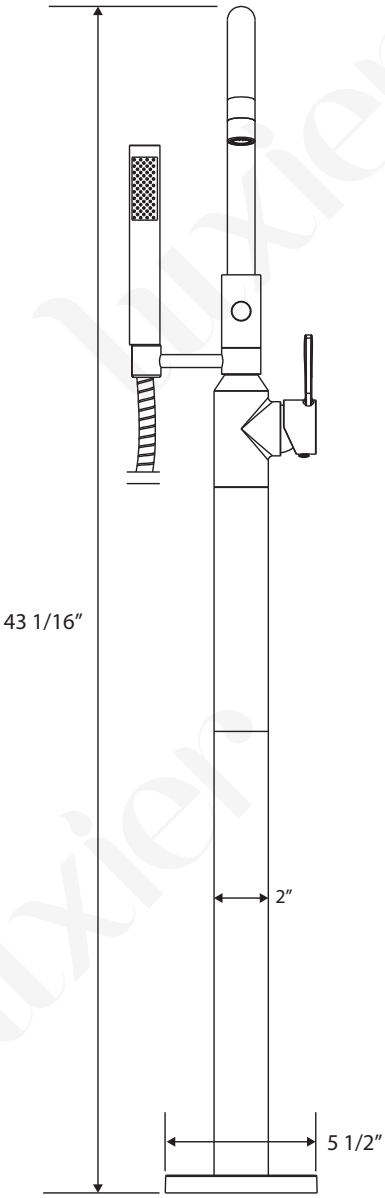

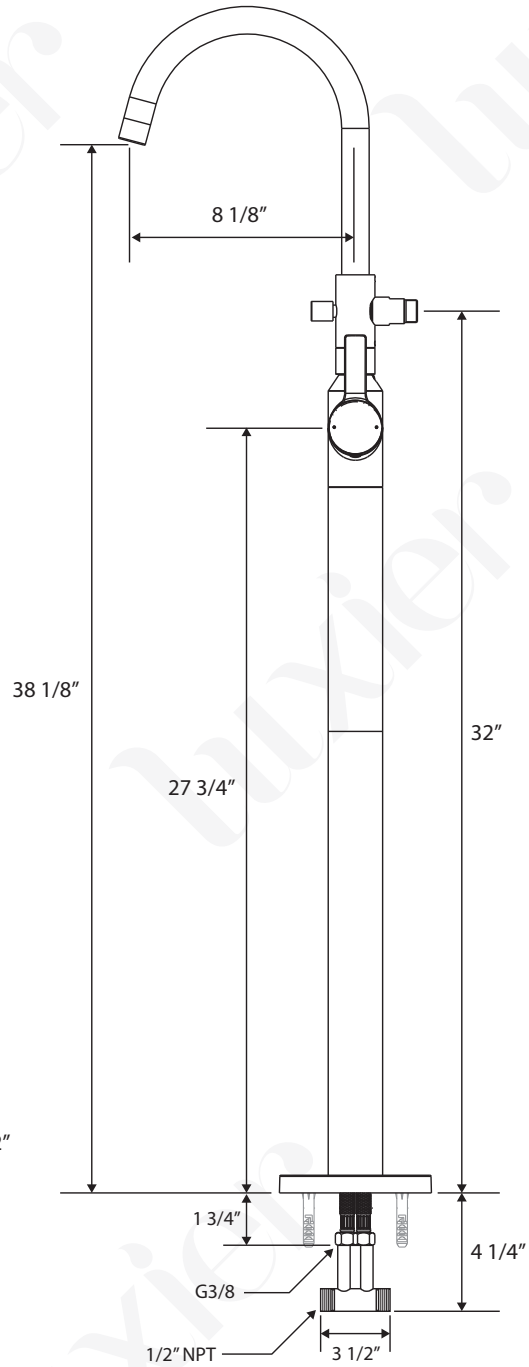

* Drawings not to Scale. All Measurements are Approximate *

Thank you for purchasing Luxier products. Please read the information below and keep this installation guide for future reference. If you require assistance, please contact our customer service department at 1-877-711-8828, Monday - Friday 9AM - 5PM Pacific Time or by email at support@luxierusa.com.

Limited Lifetime Warranty (For USA Only)
The manufacturer warrants this product to be leak and drip free during daily normal household use for as long as it is owned by the original purchaser of this product. Please keep a copy of the original invoice as proof of purchase.

Should a malfunction occur within the warranty period, Luxier USA will, as its option, (1) repair or replace the defective part(s) or product at no charge; (2) issue a refund of the purchase price paid for the product (Valid within 30 days from the date of purchase); or (3) issue a credit to be applied against the purchase of a new Luxier product. Shipping/delivery charges may apply and are in Luxier USA's sole discretion.

This limited warranty shall not apply to goods which have been subject to accident, negligence, improper installation, product abuse, product misuse, or use of cleaners containing abrasives, alcohol or other organic solvents, whether performed by a contractor, service company, or yourself, are excluded from this warranty.

Our responsibility under this warranty is limited to only to replacement parts and no other costs. Luxier USA will not be responsible for labor charges and/or damage incurred by installation, repair or replacement, nor for any indirect incidental or consequential damages, losses, injury or costs of any nature relating to this faucet. Except as provided by law, this warranty is in lieu of and excludes all other warranties, conditions, and guarantees, whether expressed or implied, statutory or otherwise, including without restriction those merchantability of fitness for use.

This limited warranty is non-transferable. This limited warranty only applies to products purchased and installed in the United States. This limited warranty covers the original consumer purchase only and does not include business, commercial or industrial use of this product. To obtain service under the Limited Warranty, please contact Luxier USA at support@luxierusa.com. The Luxier USA Customer Care Department will determine whether to repair or replace your product, issue a refund, or issue a credit.

Important Points

- This installation guide is subject to change without notice, please contact us to request the most updated version of this installation guide.
- This is a general installation guideline, actual installation may vary. Consult a professional if necessary.
- Read and understand this instructions completely before installation.
- Please follow all local building and plumbing codes.
- Product drawings in this installation guide is for illustration purpose only. Actual product may vary depends on model.
- Always take extra precautions and wear appropriate safety equipment when installing this product.
- Wrap all threaded connections, except the aerator in the spout, with Teflon (PTFE) tape. Always wrap in a counterclockwise direction.
- When installing your new faucet, first hand tighten the water supply hoses then use a wrench to give the compression nuts an additional (1/4) turn. Do not overtighten the compression nuts as it will reduce the integrity of the sealed connection.

You may also need the following tools

1. Safety Glasses	5. Adjustable / Pipe Wrench
2. Teflon (PTFE) Tape	6. Screwdriver
3. Plumber's Putty and Caulking	7. Electric Drill
4. Pipe Cutter	

Maintenance Guide

Please follow the cleaning material manufacturer's instructions. Damage caused by improper treatment will not be covered by product warranty. In addition, pay attention to the following points:

- Regular cleaning can prevent mineral build up on faucet spout.
- Carefully read the cleaner product label to ensure the cleaner is safe for use on the material.
- Test the cleaner on a small area before using on the entire surface.
- Use a mild detergent such as liquid dishwashing soap and warm water for cleaning.
- Do not use abrasive / harsh chemical when cleaning the fixture as they will damage and dull the finish.
- When using spray cleaners, spray first onto a soft cloth or sponge. Never spray directly onto the faucet as droplets can enter openings and gaps and cause damage.
- After cleaning, rinse thoroughly with clean water to remove any cleaner residue.

Installation

The T-Connector needs to be fitted to both the hot and cold water pipes before installing the Tub Filler. The T-Connector should be about 3 7/8″ below the surface of the finished floor and the floor opening should be 2.5″ in diameter. See figure B.

IMPORTANT: This product should be installed by professional installers.

IMPORTANT: It is strongly recommended to dry fit all parts before final installation.

IMPORTANT: Provide adequate clearance around the Tub Filler.

Figure A. T-Connector Dimensions

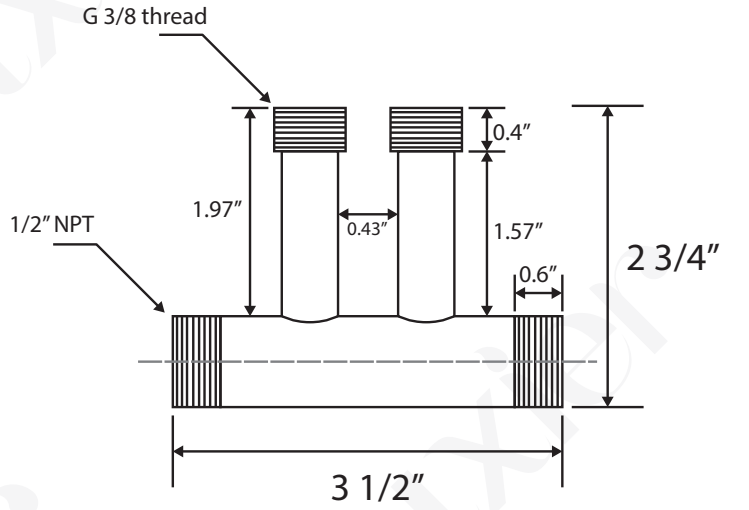

* Drawings not to Scale. All Measurements are Approximate *

Figure B. Recommended T-Connector Depth

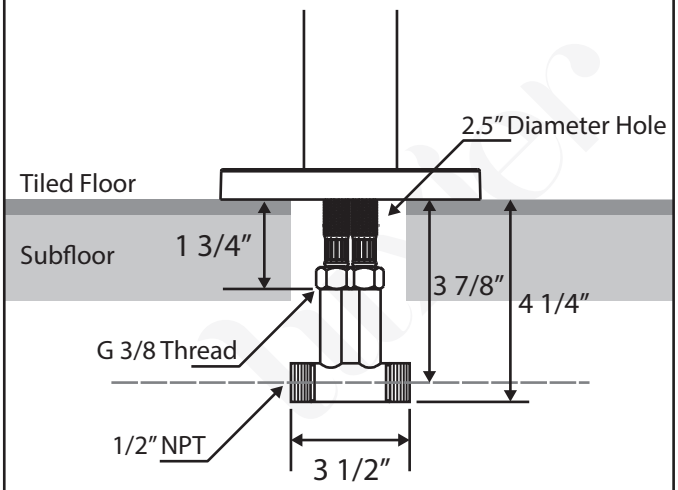

* Drawings not to Scale. All Measurements are Approximate *

Figure C. Pipe Connection

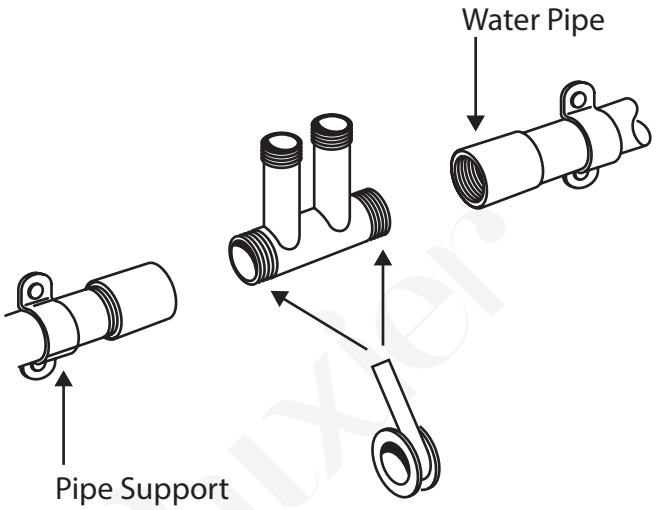

Figure C. Secure water pipes to floor joist with pipe supports. Apply PTFE tape to the threads of the T-Connector before connecting to the water pipes. Do not overtighten the connections.

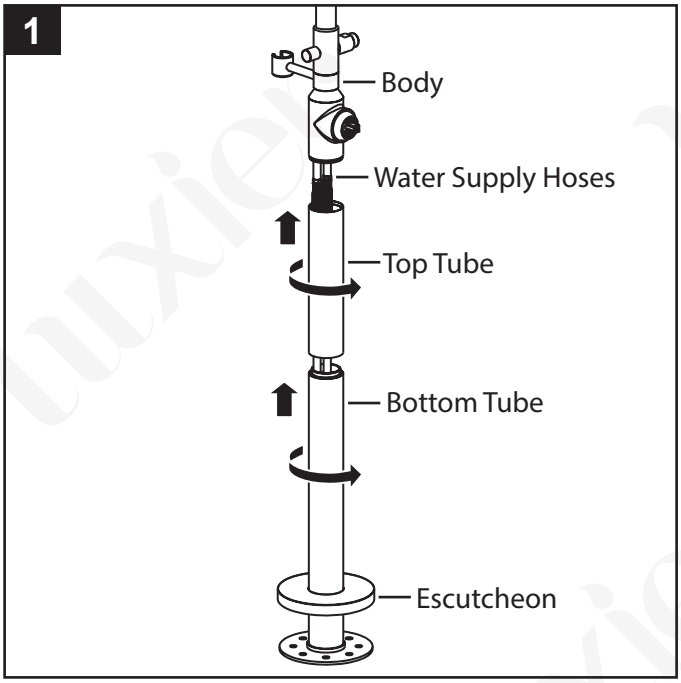

1. Insert the Top Tube over Water Supply Hoses. Thread the Top Tube to the Body and tighten it fully. Slide the Escutcheon onto the Bottom Tube and connect it to the Top Tube. Make sure the Tubes are fully tightened.

Installation

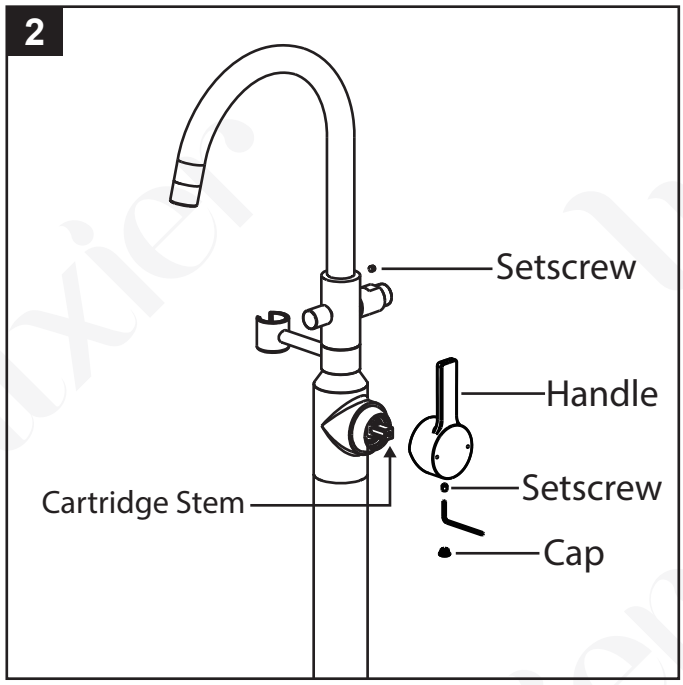

2. Remove the Cap and Setscrew from the Handle and loosen the Setscrew with the included Hex Wrench. Insert the Handle on the cartridge stem, tighten the Setscrew and install Cap to the Handle. (**NOTE:** The top Setscrew can be loosened to swivel the spout if needed. Tighten the Setscrew if the position of the spout was changed.)

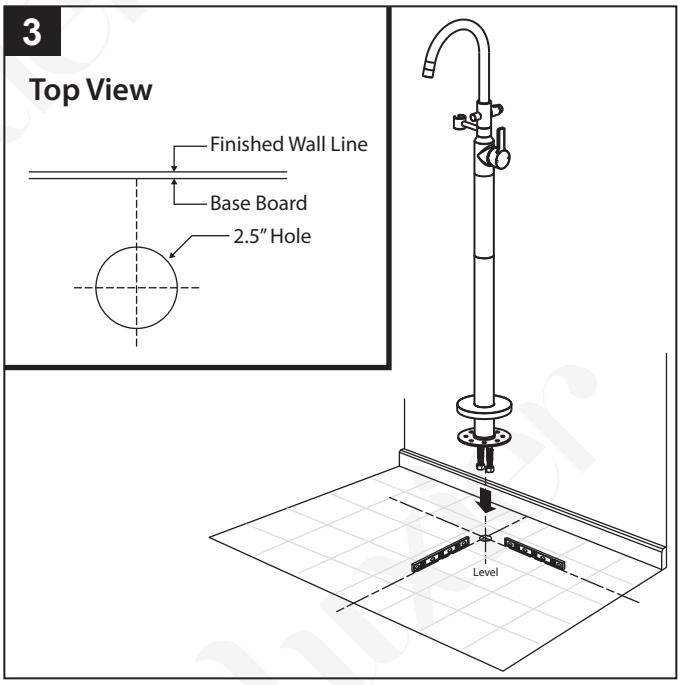

3. Make sure the floor is level in both directions. Determine the distance from the finished wall to the center of the floor water supply hose. Make sure there is enough clearance around the Tub Filler. Mark the center line. Drill a 2.5" diameter hole for the water supply hoses. Insert the water supply hoses through the hole and place tub filler assembly on the floor and check for alignment.

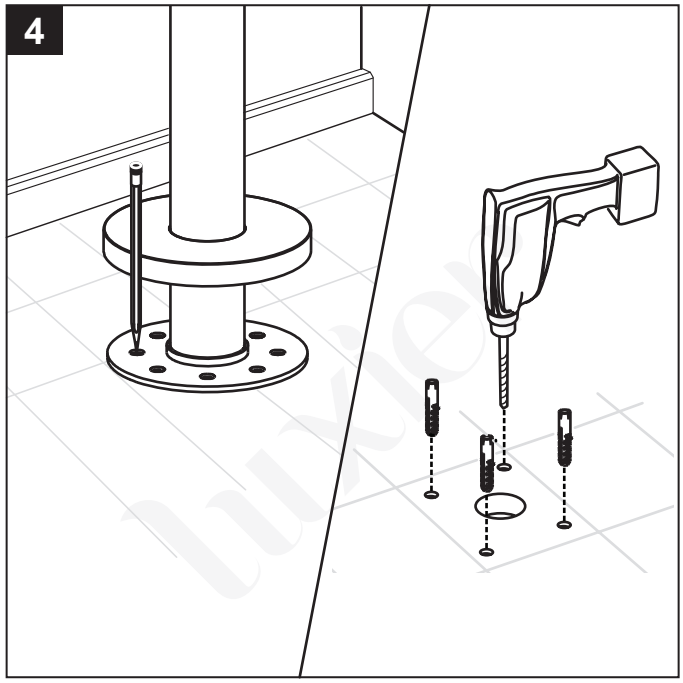

4. With the Tub Filler Assembly aligned in the desired position, mark each of the 4 mounting holes from the base on the floor. Use a drill with 3/8" drill bit, drill the holes 2" deep and insert the included anchors. Make sure the anchors are flush with the finished floor.

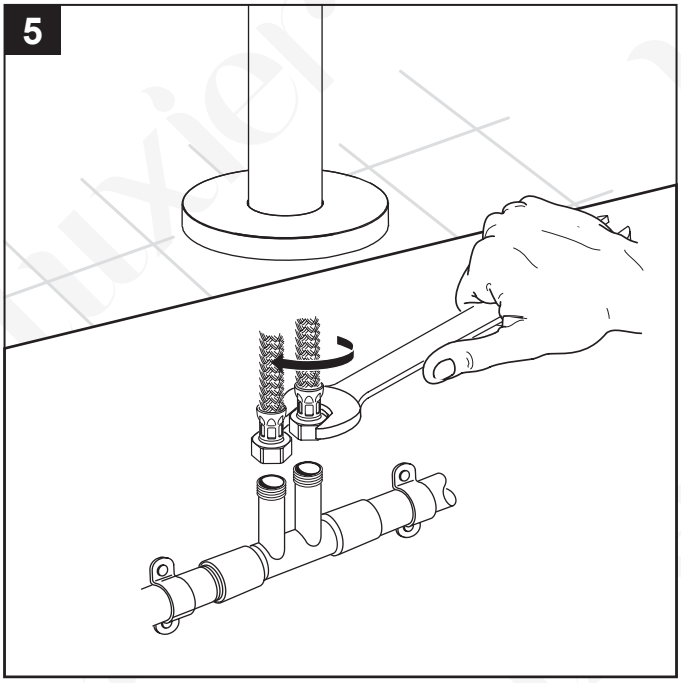

5. Place the Tub Filler over the T-Connector and connect both water supply hoses to the T-Connector. Do not overtighten the connections.

Installation

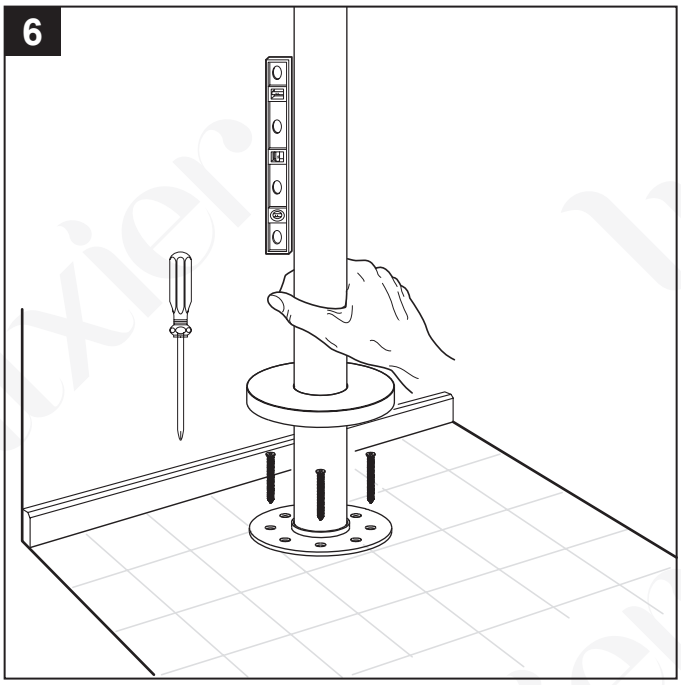

6. Hold the Tub Filler Assembly in place and install the four Mounting Screws. Check alignment and level before fully tightening the screws. After tightening the screws slide the Escutcheon down to cover the flange.

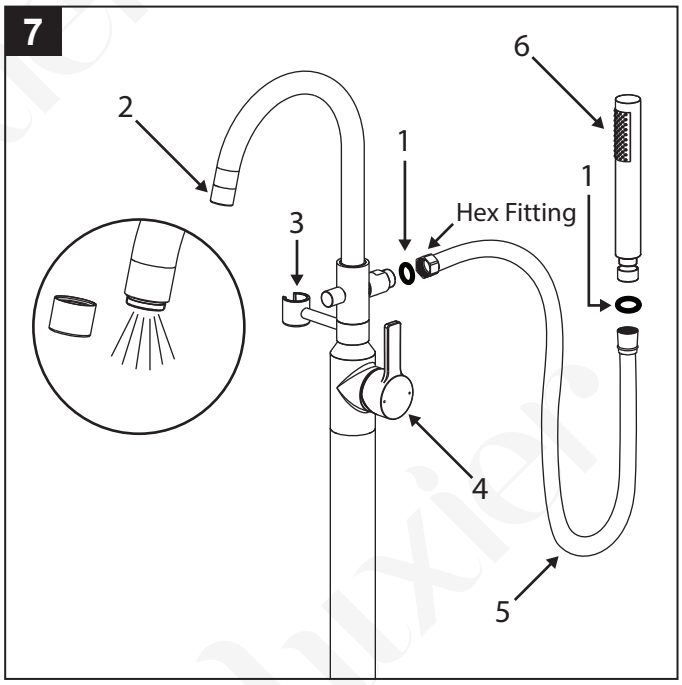

7. Connect the Hand Shower Hose (5) to the Tub Filler with the hex nut end to the Tub Filler. (**NOTE:** Make sure the rubber washers (1) are installed on both end of the hose)

Hand tighten the Hand Shower Wand (6) to the Hand Shower Hose (5). The Hand Shower Wand should be placed in the Holder (3) when not in use.

Remove the aerator assembly (2) from the spout and turn on water for 1 minute and check for leaks at all connections. Move the Handle (4) throughout the temperature range to flush out any debris in both hot and cold water lines thoroughly. The installation is now complete.

Operations

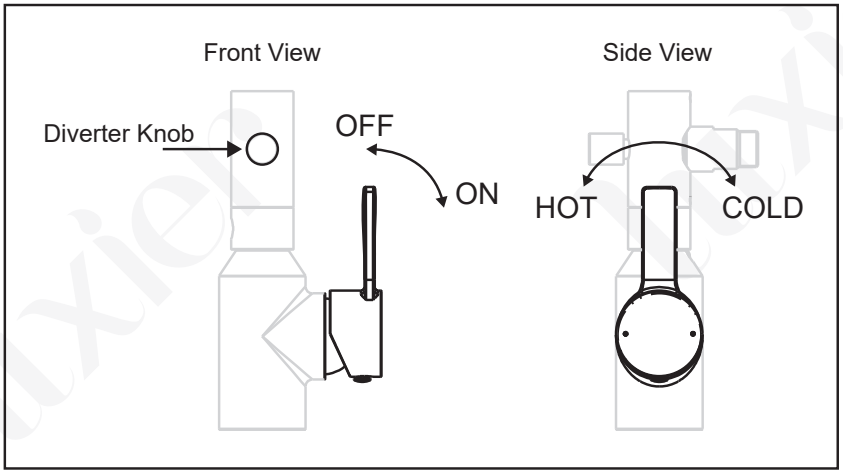

To operate the tub filler simply move the handle to the ON position to turn on the water. Adjust the temperature by moving the handle from side to side to set the desired water temperature.

To operate the hand shower wand, remove the hand shower from its holder and direct the jets into the tub. Pull the diverter knob on the faucet body. Push the diverter knob to direct the water back to the spout.

Parts
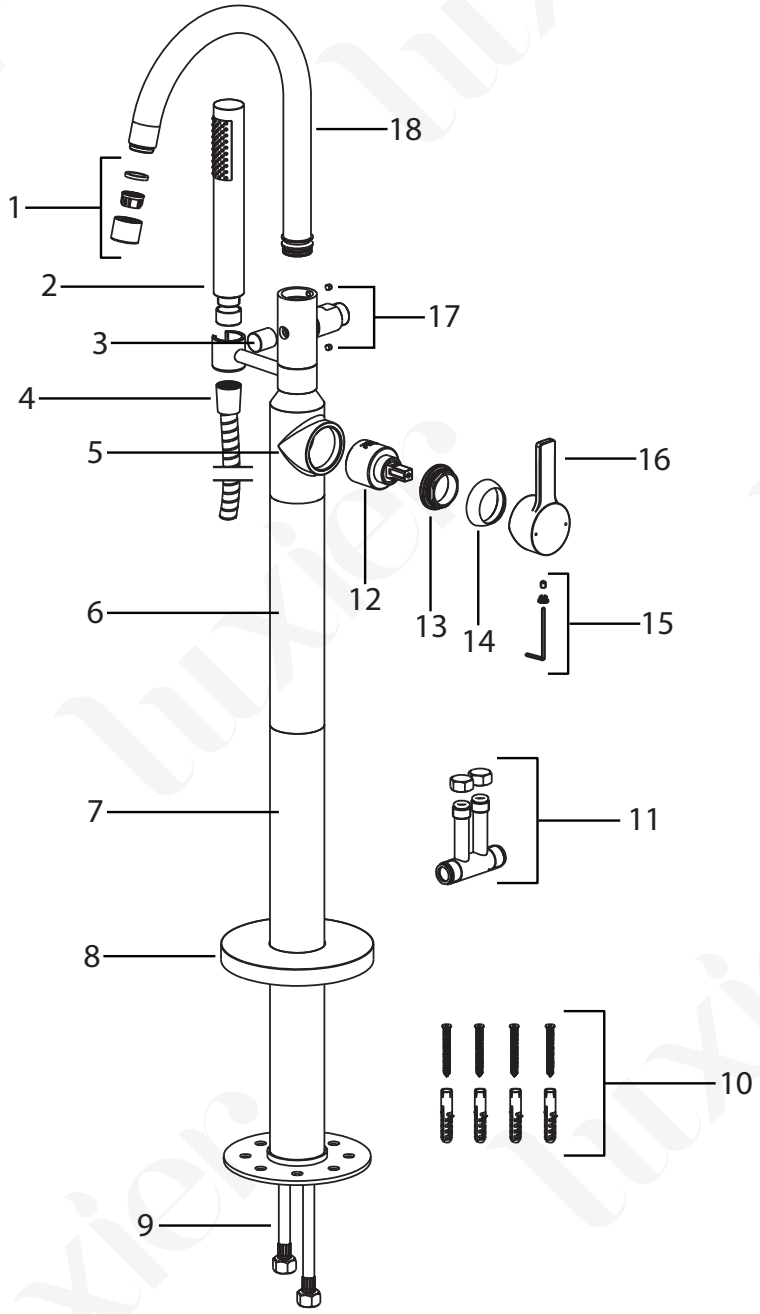
01. Aerator Assembly
02. Hand Shower Wand
03. Diverter Knob
04. Hand Shower Hose
05. Body
06. Top Tube
07. Bottom Tube
08. Escutcheon
09. Hot and Cold Water Supply Hose
10. Mounting Screws and Anchors
11. T-Connector
12. Cartridge
13. Cartridge Locking Nut
14. Dome Cap
15. Cap, Setscrew and Hex Wrench
16. Handle
17. Setscrews
18. Spout