ITEM ID	DESCRIPTION
EV36P2	Everdean 36in Vanity w/White VTop

REV	ECO#	DESCRIPTION	REV'D BY DATE	CHK'D BY DATE	APRV'D BY DATE
0		RELEASE	AGS 05/24/19	KN 05/24/19	EC 05/24/19

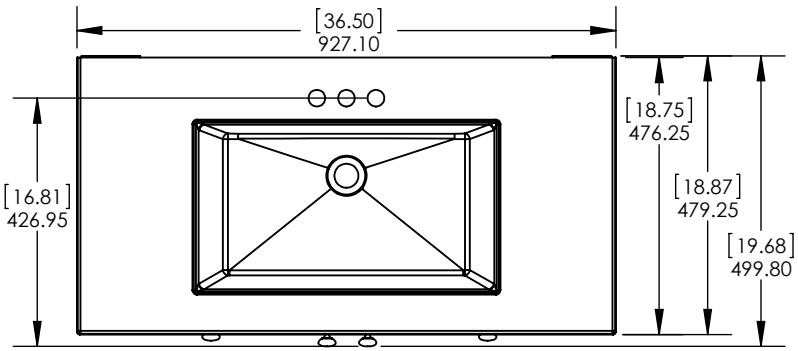

Top View / Vista Superior

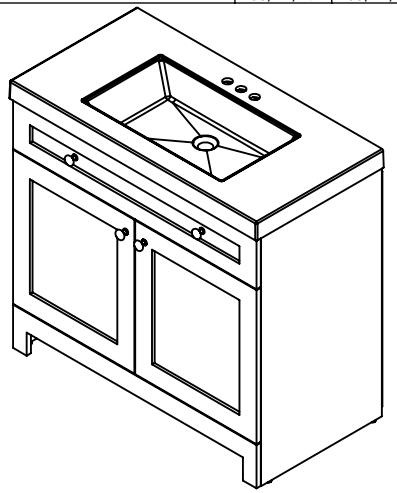

Isometric View / Vista Isometrica

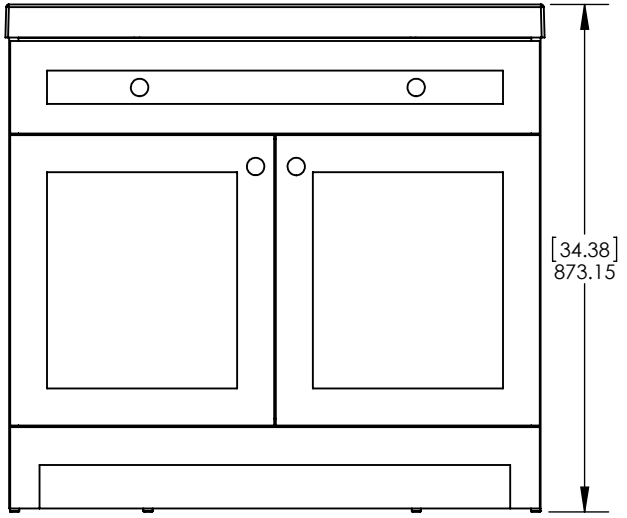

Front view / Vista Frontal

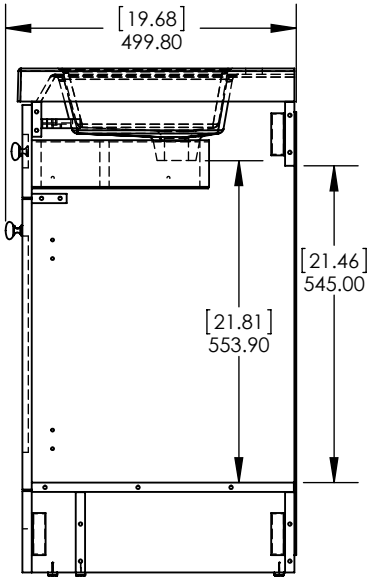

Side View / Vista Lateral

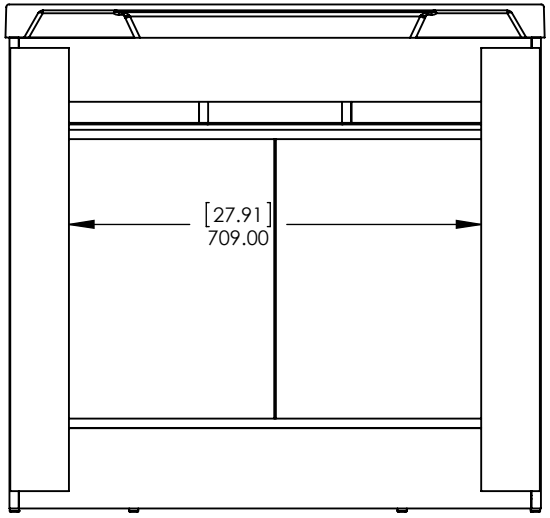

Back View / Vista Trasera

PROPRIETARY AND CONFIDENTIAL
THE INFORMATION CONTAINED IN THIS DRAWING IS THE SOLE PROPERTY OF WOODCRAFTERS HOME PRODUCTS L.L.C. ANY REPRODUCTION IN PART OR AS A WHOLE WITHOUT THE WRITTEN PERMISSION OF WOODCRAFTERS HOME PRODUCTS L.L.C. IS PROHIBITED.

Tolerancia no epsecificada	
Lineal ±0.5mm	Angular ±0.5°

Drawn BY/ Dibujado por:	Adolfo Gallegos	08/02/19	Cabinet Name/Nombre de Gabinete: Everdean 36in Vanity w/White VTop - Pearl Gray
Checked By / Revisado Por:	Karina Navarro	08/02/19	FG ID:
Approved By / Revisado Por:	Eduardo Cisneros	08/02/19	# of Drawing/ de Dibujo: PAGE 1 OF 1 REV: 0

ID	Description	Technology	Status
595426	Vtop Oslo 36.5x18.75 White	Solid White	Approved for production

Rev #	Approved by	Change
0	R. Rubio	Released

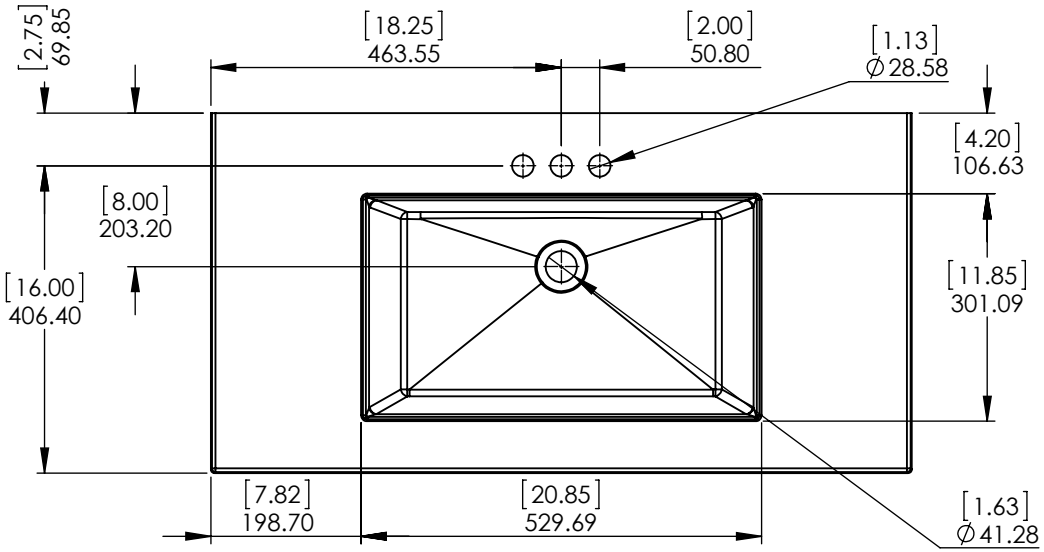

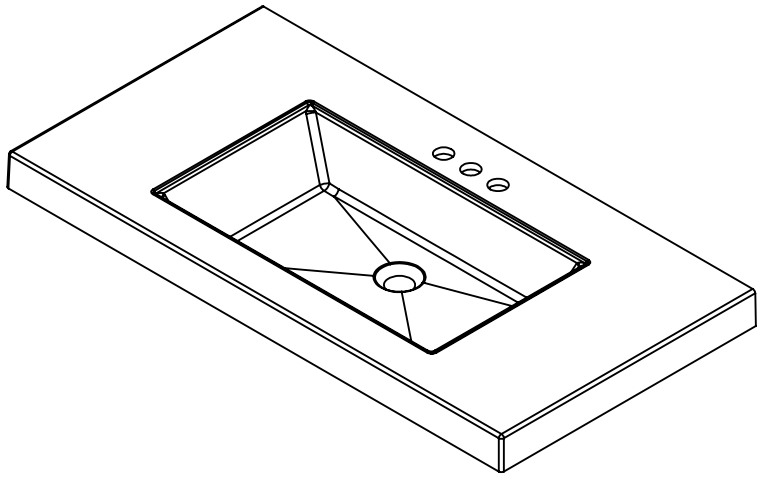

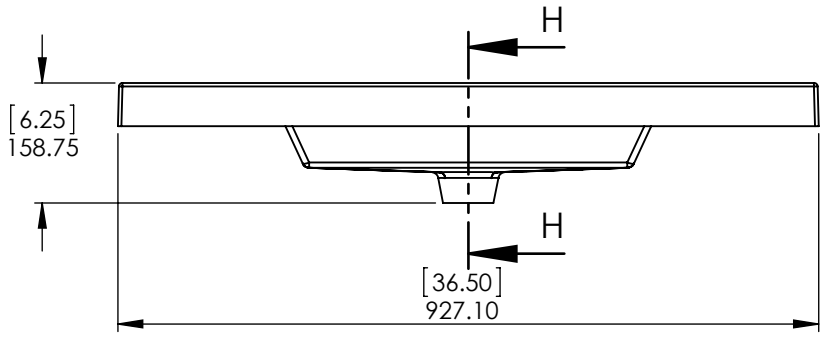

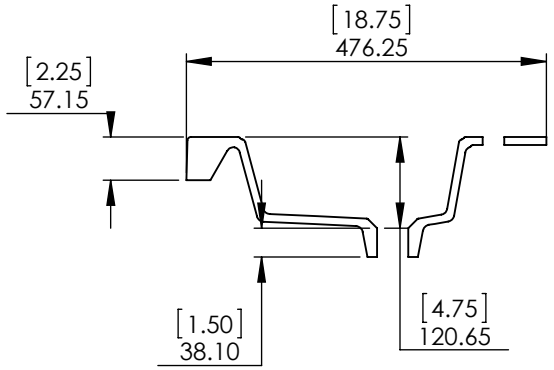

NOTE: MAX. WARPAGE TOLERANCE 1/8"

PROPRIETARY AND CONFIDENTIAL
THE INFORMATION CONTAINED IN THIS DRAWING IS THE SOLE PROPERTY OF WOODCRAFTERS. ANY REPRODUCTION IN PART OR AS A WHOLE WITHOUT THE WRITTEN PERMISSION OF WOODCRAFTERS IS PROHIBITED.

UNLESS OTHERWISE SPECIFIED
DIMENSIONS ARE IN MM. AND [INCHES]
TOLERANCES ARE + 0.125 [3.175] - 0.125 [-3.175]
SCALE:1:10

	NAME	DATE
DRAWN	R. Rubio	11/01/16
CHECKED	R. Rubio	11/01/16
ENG APPR.	R. Rubio	11/01/16
MFG APPR.	C. Leal	11/01/16

SIZE A | DWG. NO. Vtop Oslo 36.5x18.75 4in | REV: 0 | SHEET 1 OF 1

ITEM ID	DESCRIPTION
EV36P2	Everdean 36in Vanity w/White VTop

REV	ECO#	DESCRIPTION	REV'D BY DATE	CHK'D BY DATE	APRV'D BY DATE
0		RELEASE	AGS 05/24/19	KN 05/24/19	EC 05/24/19

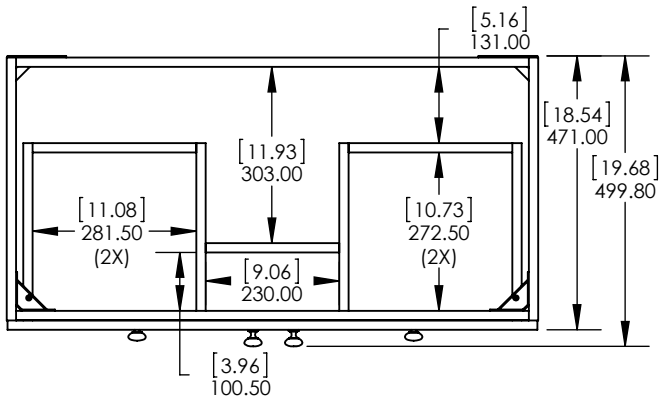

Top View / Vista Superior

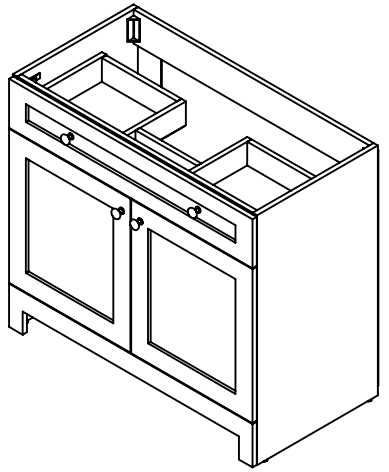

Isometric View / Vista Isometrica

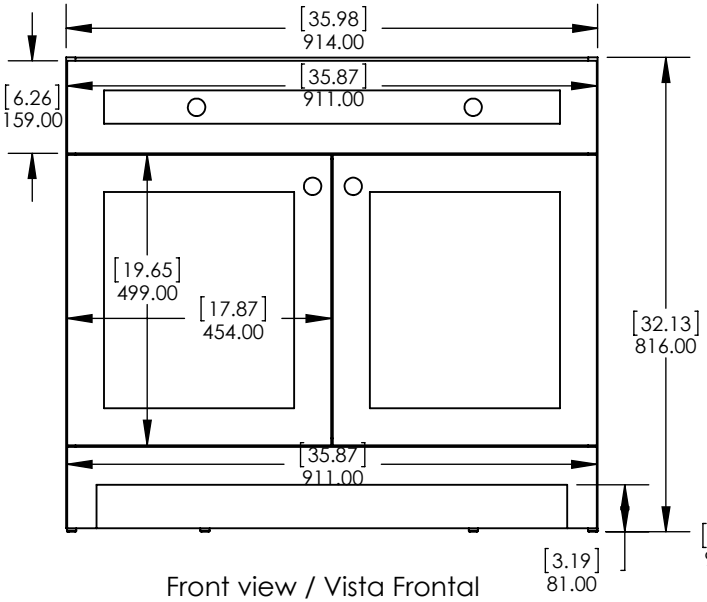

Front view / Vista Frontal

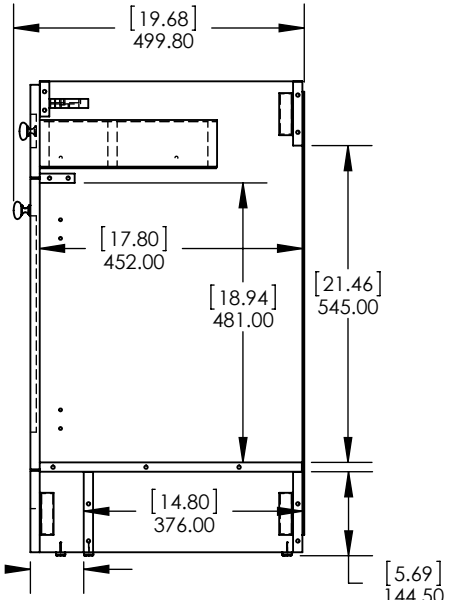

Side View / Vista Lateral

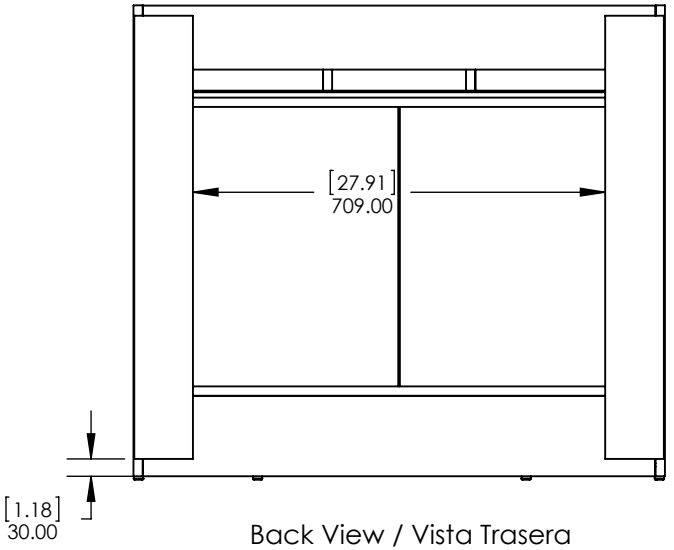

Back View / Vista Trasera

PROPRIETARY AND CONFIDENTIAL
THE INFORMATION CONTAINED IN THIS DRAWING IS THE SOLE PROPERTY OF WOODCRAFTERS HOME PRODUCTS L.L.C. ANY REPRODUCTION IN PART OR AS A WHOLE WITHOUT THE WRITTEN PERMISSION OF WOODCRAFTERS HOME PRODUCTS L.L.C. IS PROHIBITED.

Tolerancia no epsecificada

Lineal	Angular
±0.5mm	±0.5°

Drawn BY/ Dibujado por:	Adolfo Gallegos	08/02/19
Checked By / Revisado Por:	Karina Navarro	08/02/19
Approved By / Revisado Por:	Eduardo Cisneros	08/02/19

Cabinet Name/Nombre de Gabinete: Everdean 36in Vanity w/White VTop - Pearl Gray

FG ID:

# of Drawing/ de Dibujo:

PAGE 1 OF 1

REV: 0