SEACHROME

Seachrome Corporation
1906 East Dominguez Street
Long Beach, California 90810
Phone: (800) 955-2476
Fax: (800) 444-3380

Description:

SLR-260225-PWS
26" x 22-1/2" SHOWER SEAT
(Reversible Top Shower Seat)

Customer:

Customer Part #

12-17-2020

SHOWER SEAT
MODEL #SLR-260225-PWS
(Reversible Top Shower Seat)
(White One-Piece Phenolic)

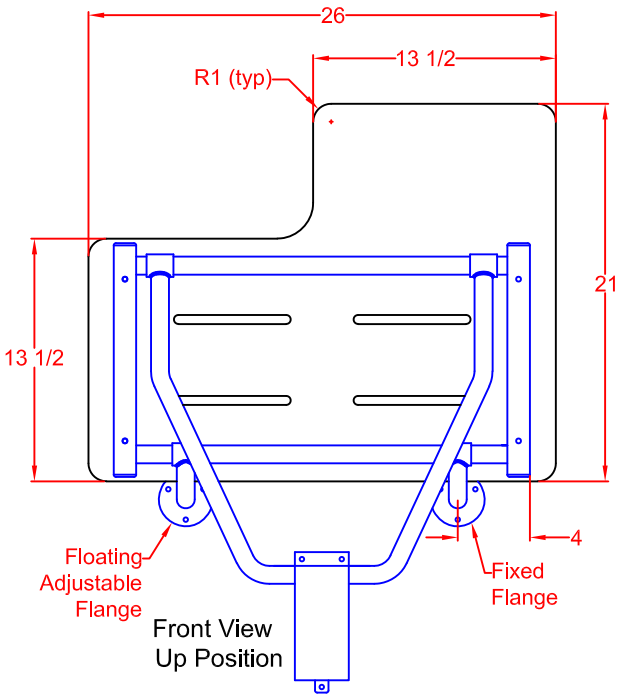

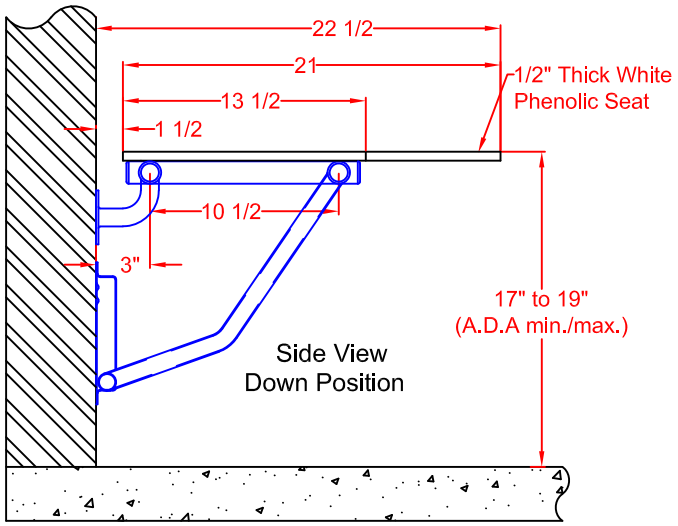

OPERATION:
Constant friction wall mounted "U"- shaped bracket guides leg freely up and down, resulting in a low pressure constant spring action to raise and lower seat. Seat is automatically held in a raised position by the positive stop friction guide bracket.

ARCHITECTURAL SPECIFICATIONS:
Model #SLR-260225-PWS Folding Bench Seat from Seachrome Corp., Long Beach, California 90810. Phone: (800) 955-2476. Frame: Type 304 (18-8) S.S. tube, 1-1/4" (32mm) x 18ga. (1.2mm) sq. main frame with 1" (25mm) x 18ga. (1.2mm) rd., cross members. Leg: "U"-Shaped yoke of type 304 (18-8) S.S. tubing, 1" (25mm) x 18ga. (1.2mm)rd., with constant friction, wall mounted guide bracket.

MATERIALS:
FRAME: Type 304 (18-8) S.S. tubing, 1-1/4" (32mm) x 18ga. (1.2mm) sq. main frame with 1" (25mm) x 18ga. (1.2mm) rd. cross members.

WALL FLANGES (2): Type 304 (18-8) S.S., 10ga. (3.4mm) x 3" (76mm) Dia. Heliarc welded to 1" (25mm) rd. x 18ga. (1.2mm) 90 degree leg supports, and to 1-1/4" (32mm) rd. x 12ga. (2.7mm) frame hinge couplings. Three mounting holes in each flange.

SUPPORT LEG: "U"- Shaped yoke of type 304 (18-8) S.S. Tube, 1" (25mm) rd. x 18ga. (1.2mm), heliarc welded to 1-1/4" (32mm) rd. x 12ga. (2.7mm) frame hinge couplings.

GUIDE BRACKET: Type 304 (18-8) S.S., 18ga. (1.2mm) x 3" (76mm) wide, constant friction, wall mounted guide bracket, with positive stop for raised position.

SEAT CHOICES: (Designate when ordering)
PWS, PAS or PTS - White (PW), Almond (PA) or Teak (PT) Phenolic 1/2" (13mm)
One Piece Solid secured to frame with S.S. screws.

INSTALLATION:
All Shower Seats must only be installed using suitable fasteners and sufficient in-wall backing materials. A.D.A. mounting height for lowered seat is 17" (432mm) to 19" (482mm).

SLR-260225-PWS is manufactured with Seachrome's patented Lift-Assist Technology and fully complies with ADA Code 309.4 Operation which requires less than 5 lbs. of force to operate.

SEACHROME
Lift-Assist
EXCLUSIVE, PATENTED EASY LIFT TECHNOLOGY
FOR ADA COMPLIANT BATH ACCESSORIES

US Patent No.: 9,844,272