Item #1006 247 880

Model #LK1901

HAMPTON BAY®

USE AND CARE GUIDE

CEILING FAN LIGHT KIT

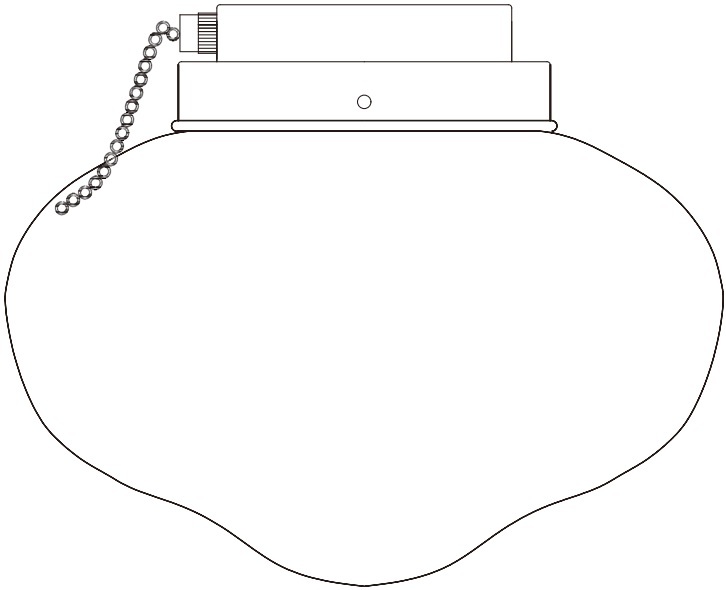

Questions, problems, missing parts? Before returning to the store,
call Hampton Bay Customer Service
8 a.m. - 7 p.m., EST, Monday – Friday, 9 a.m. – 6 p.m., EST, Saturday

1-855-HD-HAMPTON

HAMPTONBAY.COM

THANK YOU

We appreciate the trust and confidence you have placed in Hampton Bay through the purchase of this ceiling fan light kit. We strive to continually create quality products designed to enhance your home. Visit us online to see our full line of products available for your home improvement needs. Thank you for choosing Hampton Bay!

Table of Contents

Safety Information....2
Warranty....2
Pre-Installation....3
Key Hole Installation....5
Universal Installation....6
Shade Installation....7
Maintenance....7
Troubleshooting....7

Safety Information

- Before starting installation of this fixture or removal of a previous fixture, disconnect the power by turning off the circuit breaker or by removing the fuse at the fuse box.
- To ensure a successful installation be sure to read these instructions and review the diagrams thoroughly before beginning. Follow the instructions that are applicable for your light kit.
- All electrical connections must be in accordance with local codes, ordinances, and national electric codes. If you are unfamiliar with methods of installing electrical wiring, secure the services of a qualified electrician.

WARNING: Disconnect the power prior to removing or installing a light fixture.

CAUTION: Ceiling fan light kits are only meant to be used with ceiling fans. Do not install as a light fixture.

CAUTION: Review the installation instructions supplied with your fan. Make sure that your fan has been wired properly into the ceiling to allow use with light kit.

CAUTION: Risk of electrical shock. Before starting installation, disconnect the power by turning off the circuit breaker or removing the fuse at the fuse box.

CAUTION: To reduce the risk of fire and electric shock this light kit should be used only with fan models listed below.

Model Number	Manufacturer
336, 342, 542, 548A, 552, 552AL, 664, 652, 652A, 652AL, 739, 852, 442L, 442T, 452, 452L	Air Cool Industrial Co., Ltd
FC-3142, S148, S142, S136, 3052, 3052W, TO52, 1152, GN-52, 42	Fanthing Co., Ltd.
BC42, BC542, AC42, AC52, C42, AC55, C452, HC-42, CH42, CH52, CHA36, HA42, SS2, S60, CRC52, HG52, TC52, HMP52, NA361, NA36, NA48, CC52, EC42, TCA52, THA52, H52, HA5, UC52, UC42	Shi Chen Co., Ltd.
F48-4B, -4B/1L, H30-4B, -4B/1L, -4B/3L, -5B, -5B/1L, -5B/3L, -6B, -6B/1L, -6B/3L, H42-4B, -4B/1L, -4B/3L, -4B/4L, -4B/5L, -5B, -5B/1L, -5B/3L, -5B/4L, -5B/5L, -6B, -6B/1L, -6B/3L, -6B/4L, -6B5L, H52-4B, -4B/1L, -4B/3L, -4B/4L, -1B/5L, -5B, -5B/1L, -5B/3L, -5B/4L, -5B/5L, -6B, -6B/1L, -6B/3L, -6B/4L, -6B/5L, M30-4B, -4B/1L, -4B/3L, -5B, -5B/1L, -5B/3L, -6B, -6B/1L, -6B/3L, M42-4B, -4B/1L, -4B/3L, -4B/1L, -4B/5L, -5B, -5B/1L, -5B/3L, -5B/4L, -5B/5L, -6B, -6B/1L, -6B/3L, -6B/4L, -6B/5L, M52-4B, -4B/1L, -4B/3L, -4B/4L, -4B/5L, -5B, -5B/1L, -5B/3L, -5B/4L, -5B/5L, -6B, -6B/1L, -6B/3L, -6B/4L, -6B/5L, P30-4B, -4B/1L, -4B/3L, -5B, -5B/1L, -5B/3L, P42-4B, -4B/1L, -4B/3L, -5B, -5B/1L, -5B/3L	Hong Kong China

Warranty

WHAT IS COVERED

The manufacturer warrants this lighting fixture to be free from defects in materials and workmanship for a period of five (5) years from date of purchase. This warranty applies only to the original consumer purchaser and only to products used in normal use and service. If this product is found to be defective, the manufacturer's only obligation, and your exclusive remedy, is the repair or replacement of the product at the manufacturer's discretion, provided that the product has not been damaged through misuse, abuse, accident, modifications, alterations, neglect or mishandling.

WHAT IS NOT COVERED

This warranty shall not apply to any product that is found to have been improperly installed, set up, or used in any way not in accordance with the instructions supplied with the product. This warranty shall not apply to a failure of the product as a result of an accident, misuse, abuse, negligence, alteration, or faulty installation, or any other failure not relating to faulty material or workmanship. This warranty shall not apply to the finish on any portion of the product, such as surface and/or weathering, as this is considered normal wear and tear.

Warranty (continued)

The manufacturer does not warrant and specially disclaims any warranty, whether expressed or implied, of fitness for a particular purpose, other than the warranty contained herein. The manufacturer specifically disclaims any liability and shall not be liable for any consequential or incidental loss or damage, including but not limited to any labor/expense costs involved in the replacement or repair of said product.

Contact the Customer Service Team at 1-855-HD-HAMPTON or visit www.HAMPTONBAY.com.

Pre-Installation

PLANNING INSTALLATION

Read all instructions before assembly and installation. Before starting installation of the fixture or removal of a previous fixture, disconnect the power by turning off the circuit breaker or by removing the fuse at the fuse box. To avoid damaging this product, assemble it on a soft, non-abrasive surface such as carpet or cardboard.

NOTE: Keep your receipt and these instructions for Proof of Purchase.

TOOLS REQUIRED



Phillips screwdriver



Pliers

HARDWARE INCLUDED

NOTE: Hardware not shown to actual size.



___AA

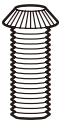

___BB



___CC



___DD



___EE



___FF



___GG

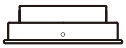

___HH

Part	Description	Quantity
AA	Wire nuts	3
BB	Shade screws	6+2
CC	Pull chain extension	2
DD	Lock washer	1
EE	Star washer	1
FF	Hex nut	1
GG	Bushing	1
HH	Fitter	2

Pre-Installation (continued)

PACKAGE CONTENTS

NET WEIGHT: 1.38 LBS

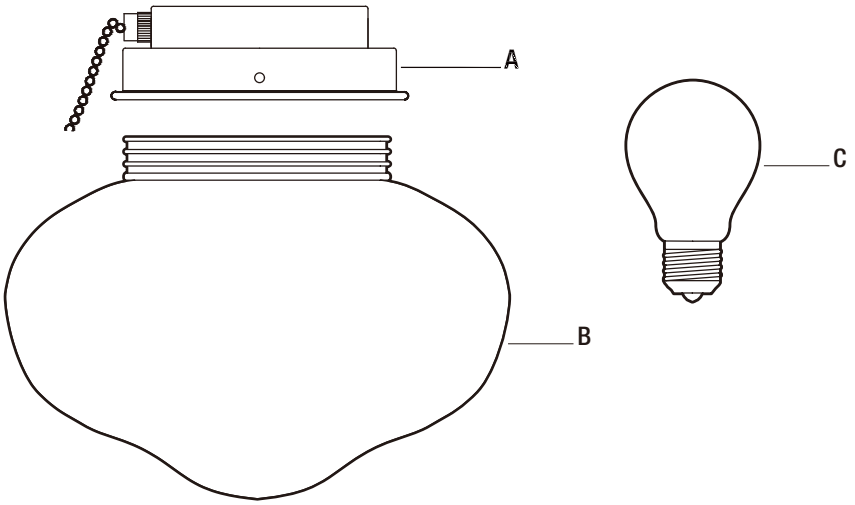

Part	Description	Quantity
A	Fitter with socket assembled	1
B	Glass shade	1
C	LED bulb	1

INSTALLATION OPTIONS

There are two different types of installations described below. Please read each one carefully to determine the best method for installing your light kit:

Key Hole Installation	The key hole refers to slots in the light kit adapter in which screws mounted to the bottom of the switch housing are inserted into these holes. The adapter is then turned, locking the screws, and the screws are tightened. Refer to the Key Hole Installation section. Remark: Keyhole space is 2.5 inch.	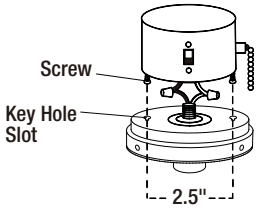
Universal Installation - Center Nipple Attachment	The universal installation usually works on all fans. This method uses the switch housing cap on the fan and an outer threaded tube on the light kit to connect them. Refer to the Universal Installation section.	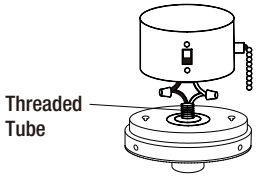

Key Hole Installation

1 Removing the switch housing cover

Note: It only works for ceiling fans with 2.5" keyhole screws spacing.

- □ Remove the switch housing cover (1) from the fan by unscrewing the screws (2). You may keep this cover (1) for future use.
- □ Replace the two screws (2) but thread only halfway into the switch housing.

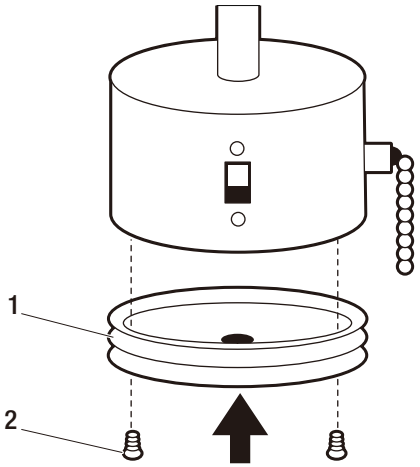

2 Connecting the wires

- □ Locate two single wires in the switch housing, white (gray on some models) and blue (red on some models) labeled “for light”.
- □ Connect the fixture wires to the light kit wires:
  - A. For French Canadian, use the plug connect system to connect white (gray) to white and blue (red) to black.
  - B. Cut off the plug from the light kit wires and strip the wires. Connect white or gray wire from the ceiling fan to the white wire from the light kit (A) with a wire nut (AA), connect blue or red wire from the ceiling fan to the black wire of the light kit (A) with a wire nut (AA). Wrap the wire connectors with electrical tape for a more secure connection.
- □ Carefully push all the wires back into the switch housing.

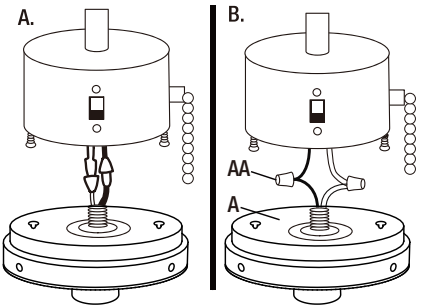

3 Installing the light kit

- □ Attach the light kit (A) by aligning its key hole slots with the two screws (1) previously threaded halfway into the switch housing. Push up so the screws (1) go through the key hole slots on the light kit (A) and twist so that the screws engage into the smaller end of the slots. Tighten the screws (1) securely to prevent the light kit from vibrating loose.
- □ Proceed to the Shade Installation section.

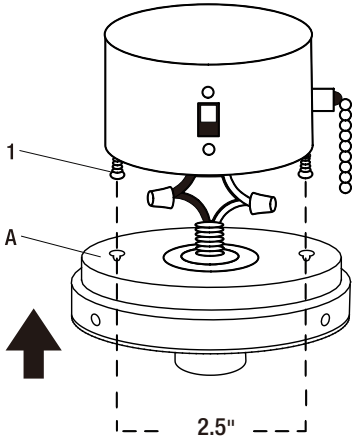

Please contact 1-855-HD-HAMPTON for further assistance.

Universal Installation

1 Removing the switch housing cover

- □ Remove the switch housing cover (1) from the fan by unscrewing the side mount screws (2).
- □ Remove the plug (3) from the center of this cover by unscrewing or pushing out. You may discard the plug.

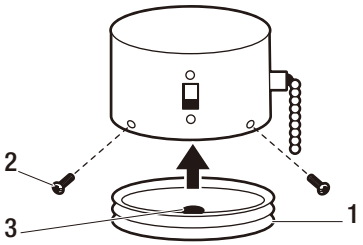

2 Attaching the cover to the light kit

- □ Attach the cover (1) to the light kit (A) threaded tube (2) by first feeding the light kit wires (black and white) through the hole in the cover (1) and then screwing the cover (1) onto the threaded tube (2). Be sure it is tight enough to prevent the light kit (A) from vibrating loose.
- □ Place the star washer (EE), lock washer (DD), and hex nut (FF) over the light kit wires onto the threaded tube, and tighten the hex nut (FF).

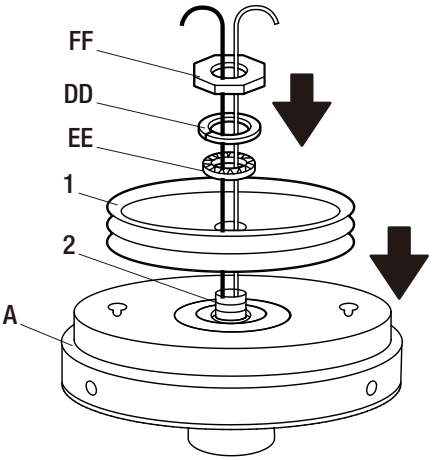

3 Connecting the wires

- □ Locate two single wires in the switch housing, white (gray on some models) and blue (red on some models) labeled “for light”.
- □ Connect the fixture wires to the light kit wires:
  - A. For French Canadian, use the plug connect system to connect white (gray) to white and blue (red) to black.
  - B. Cut off the plug from the light kit wires and strip the wires. Connect white or gray wire from the ceiling fan to the white wire from the light kit (A) with a wire nut (AA), connect blue or red wire from the ceiling fan to the black wire of the light kit (A) with a wire nut (AA). Wrap the wire connectors with electrical tape for a secure connection.

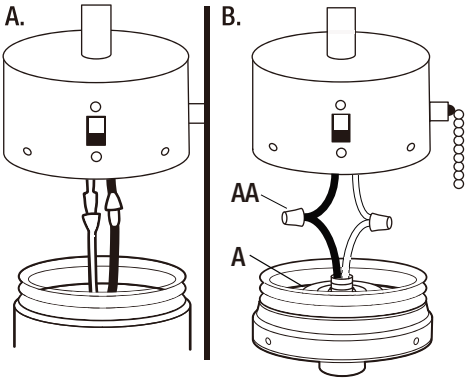

- □ Carefully push all the wires back into the switch housing.
- □ Reconnect the cover with the screws removed in step 1.
- □ Proceed to the Shade Installation section.

Shade Installation

1 Installing the bulb and shade

- □ Install the light bulb included (C). Do not over tighten. Use 9 watt LED maximum medium base light bulb.
- □ Attach the shade (B) to the light kit (A) shade holders by finger tightening the shade screws (BB). To avoid breakage, do not over tighten.
- □ In case the light pull chain is short at your location, please attach the pull chain extensions (CC) to the light pull chain.
- □ Restore electrical power. Installation is complete.

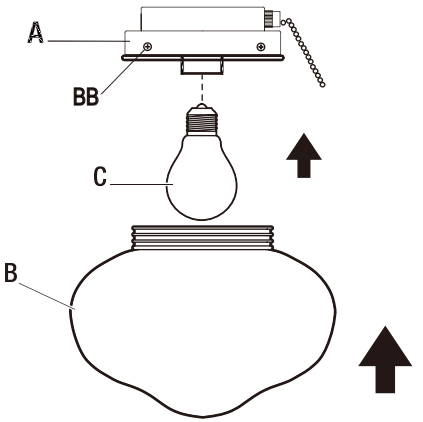

Installing a Fitter

If you wish to change your fitter based on your fan color, complete these steps:

1. If you want to replace the fitter for the fan light kit, loosen the hex nut (1) and bushing (2) to release the fitter (3).
2. When re-installing, place the fitter (3) and star washer (4) over the threaded tube (5), then tighten with the hex nut (1).
4. Take the switch (6) through the side hole of the fitter then tighten with the bushing (2).

NOTE: For the white and brushed nickel finish fitters, use the brushed nickel finish bushing. For the oil rubbed bronze fitter, please use the antique brass finish bushing.

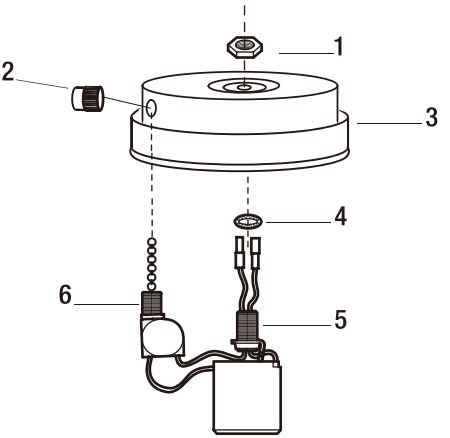

Troubleshooting

Problem	Solution
The light will not turn on.	□ Make sure the power supply is on. □ Test or replace the switch. □ Turn off electricity and remove either the canopy or decorative housing on your ceiling fan to make sure the blue or red wire from the ceiling fan is connected to the black wire from the light kit.
The fuse blows or the circuit breaker trips when the light is turned on.	□ Check the wire connections.

Please contact 1-855-HD-HAMPTON for further assistance.

This LED light bulb complies with part 15 of the FCC Rules. Operation is subject to the following two conditions: (1) This bulb may not cause harmful interference, and (2) this bulb must accept any interference received, including interference that may cause undesired operation.

WARNING: Changes or modications to this unit not expressly approved by the party responsible for compliance could void the user's authority to operate the bulb.

NOTE: This bulb has been tested and found to comply with the limits for a Class B digital device, pursuant to Part 15 of the FCC Rules. These limits are designed to provide reasonable protection against harmful interference in a residential installation. This bulb generates, uses and can radiate radio frequency energy and, if not installed and used in accordance with the instructions, may cause harmful interference to radio communications.

However, there is no guarantee that interference will not occur in a particular installation. If this bulb does cause harmful interference to radio or television reception, which can be determined by turning the bulb off and on, the user is encouraged to try to correct the interference by one or more of the following measures:
- Reorient or relocate the receiving antenna.
- Increase the separation between the equipment and receiver.
- Connect the equipment into an outlet on a circuit different from that to which the receiver is connected.
- Consult the dealer or an experienced radio/TV technician for help.

HAMPTON BAY®

Questions, problems, missing parts? Before returning to the store,
call Hampton Bay Customer Service
8 a.m. – 7 p.m., EST, Monday – Friday, 9 a.m. – 6 p.m., EST, Saturday

1-855-HD-HAMPTON

HAMPTONBAY.COM

Retain this manual for future use.