Jessenia Crystal Tufted Headboard

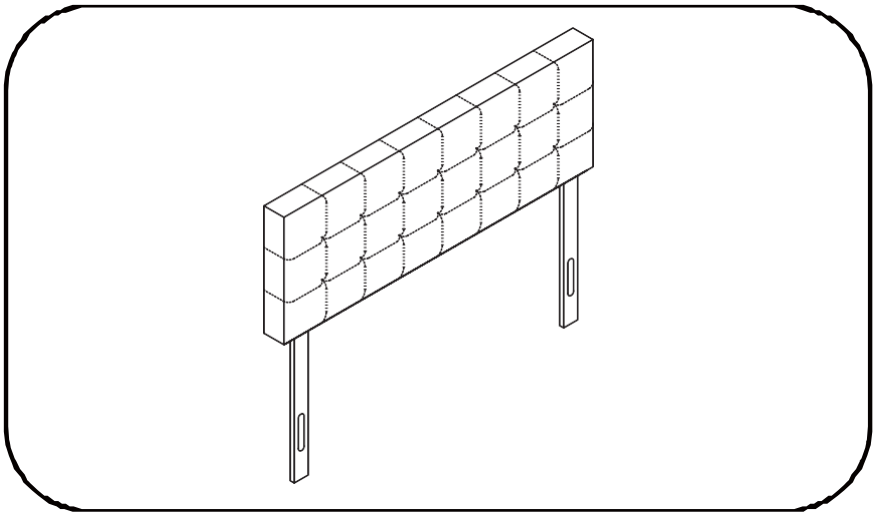

Assembly Instructions

Product Dimensions:
62”W×3”D×48”H

Please take a moment to read through the entire instruction booklet before assembly to familiarize yourself with this product. Once you feel ready to start, follow the instructions step by step and this should make this process as easy as we could make it for you.

WARNING ⚠ CAUTION

ADULT ASSEMBLY REQUIRED
CHOKING HAZARD

- This product includes small parts, sharp points and sharp edges in its unassembled state. Keep unassembled parts away from children under 3 years of age, and animals.

SAFETY WARNINGS

- Follow the information on the warnings appearing on headboard and on the carton. Do not remove warning label from headboard.
- Do not allow children under 3 years of age to use the headboard .
- Do not use substitute parts. Contact the manufacturer or dealer for replacement parts.

FURNITURE TIP-OVER HAZARD

Children have died from furniture tip-over

To reduce the risk of furniture tip-over:

- ALWAYS install tip-over restraint especially if used by a wall or in the open.
- NEVER allow children to stand, climb or hang on headboard.
- ALWAYS anchor headboard to wall or bedframe.

PARENTAL SUPERVISION IS REQUIRED

- Parents or Guardians should supervise use under the intended age specifically regarding children that may have access to it and climb on the unit.
- Do not allow horseplay on, under, or behind the unit and prohibit jumping on the unit.
- If used improperly, your unit may be pulled over or fall, creating risk of injury or damage. Children should not be permitted to climb or pull on the headboard.

USE, MAINTENANCE & ASSEMBLY

- Periodically check and ensure that the components are in their proper position, free from
- damage, and that all connectors are tight.
- Use on level surfaces only. Assemble on a soft level surface to avoid damage to unit or floor.
- Do not use this item if any components are missing or damaged.
- Do not use substitute parts. Contact the manufacturer or dealer for replacement parts.
- Only clean using damp cloth and mild detergent, do not use bleach or abrasive cleaners.
- Check you have all components and tools listed on page 4
- Do not stand or put weight on this product during assembly, this could cause damage.
- Remove all hardware from the plastic bags and separate them into groups.
- Assemble the item as close to its final position (in the same room) as possible.
- Certain assembly steps may be easier with 2 people.
- Dispose of all packaging carefully and responsibly.
- We do not recommend power screwdrivers. Only use hand screwdrivers to prevent damage to unit.

Keep these instructions for future reference.

Enfants morts suite au basculement d'un meuble.

Afin de limiter le risque de basculement de meuble:

- TOUJOURS utiliser les fixations anti-basculement.
- NE JAMAIS installer de TV sur ce produit.
- NE JAMAIS laisser d'enfants se tenir debout sur les tiroirs, portes ou etageres, y grimper ou s'y suspendre.
- NE JAMAIS ouvrir plus d'un tiroir a la fois.
- TOUJOURS placer les choses les plus lourdes dans les tiroirs du bas.

Han muerto ninos por el vuelco de meubles.

Para limitar el riesgo de vuelco de los meubles:

- Utilisar SIEMPRE las fijaciones antivuelco que suministran.
- NUNCA instalar un TV sobre este producto.
- NUNCA permitar que los ninos se pongan de pie, trepen o se cuelguen de los cajones, puertas o baldas.
- NUNCA abrir mas de un cajon a la vez.
- Colocar los objetos mas pesados en los cajones inferiores.

ASSEMBLY AT A GLANCE

Please take a moment to read through the whole instruction booklet before assembly to familiarize yourself with this product. Once you feel ready to start, follow the instructions step by step and this should make this process as easy as we could make it for you.

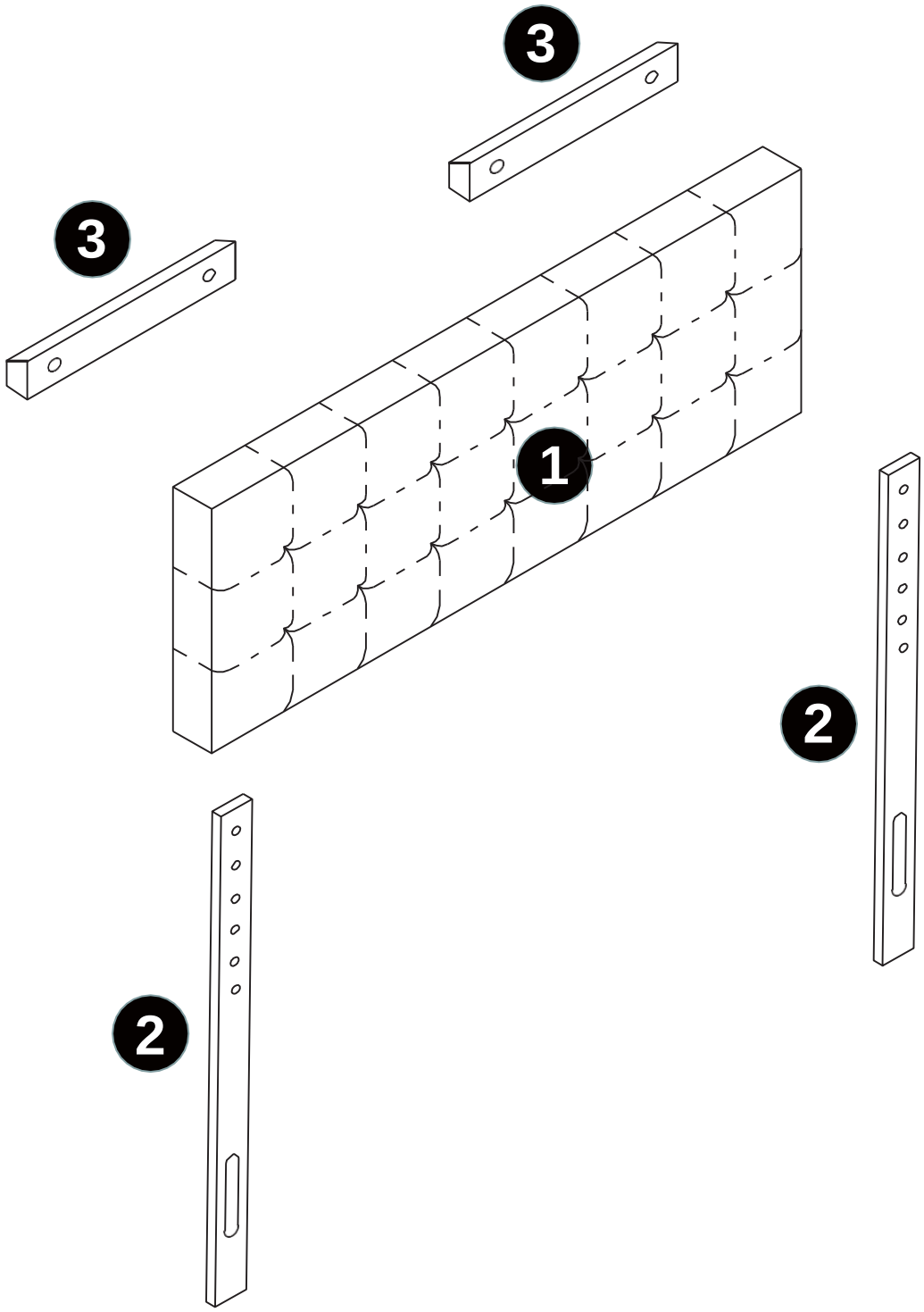

This drawing is to give you an overall idea only of how this assembly will go together and does not replace the assembly instructions.

COMPONENT PARTS

Please check that you have all the parts listed below

1. Headboard ×1
2. Leg ×2
3. Mounting Brackets ×2

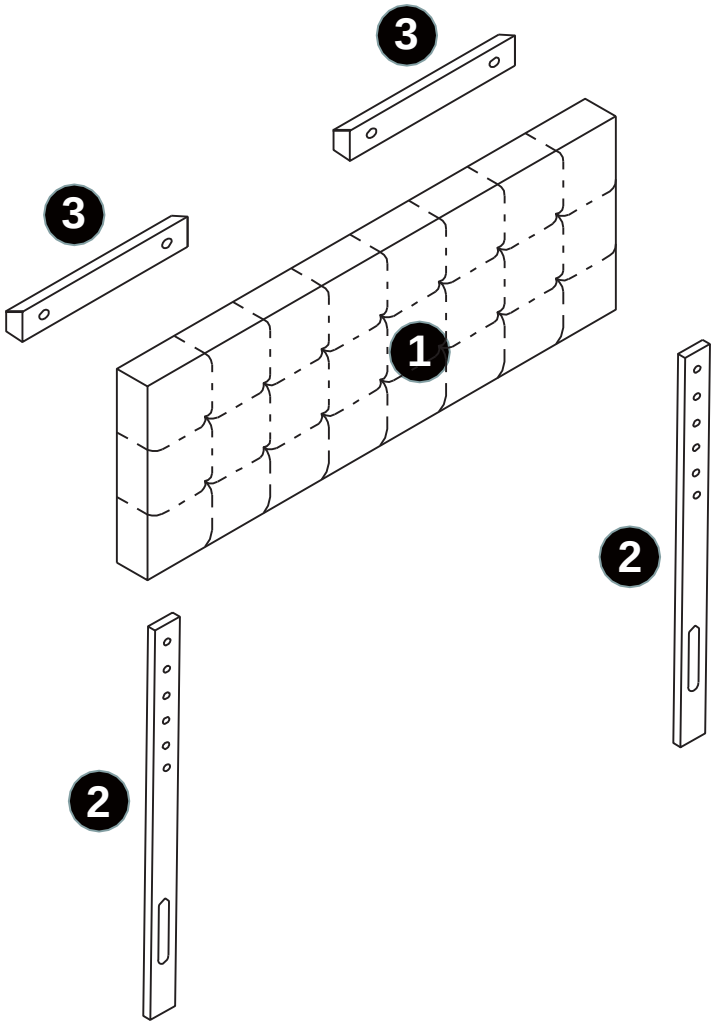

ASSEMBLY HARDWARE

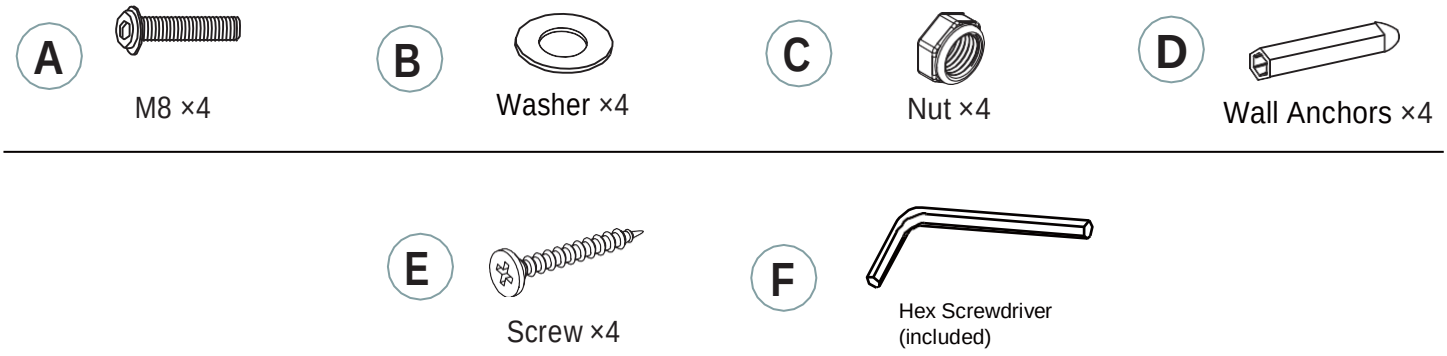

ASSEMBLY INSTRUCTIONS

1

Remove #2 Legs (x2) bolted to back of 1

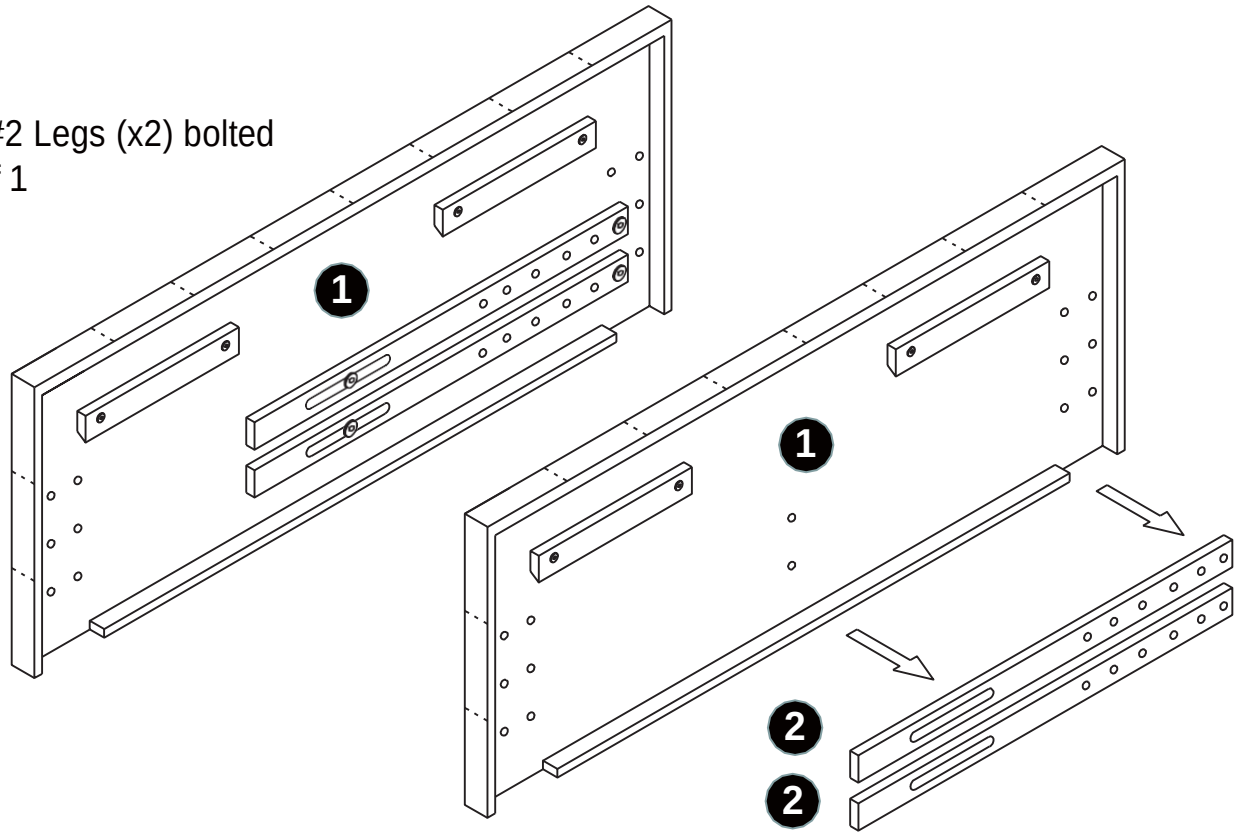

2

Attach #2 Leg (x2) to #1 with A bolt (x4).

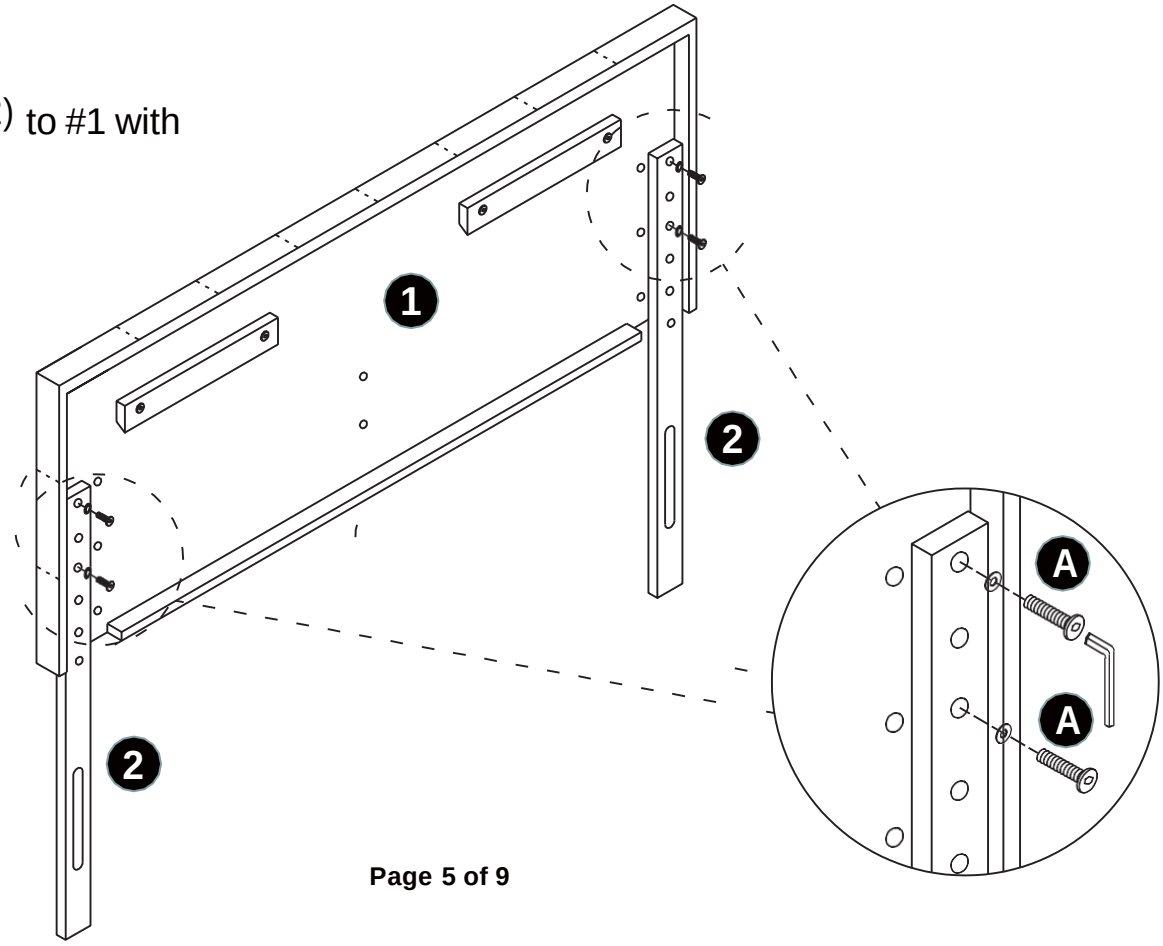

ASSEMBLY INSTRUCTIONS

3

(SKIP THIS STEP IF MOUNTING HEADBOARD TO WALL) If attaching to bedframe, Insert A bolt into #2 leg and attach to your bedframe mount on your bedrails (not included) with B washer and C Nut.

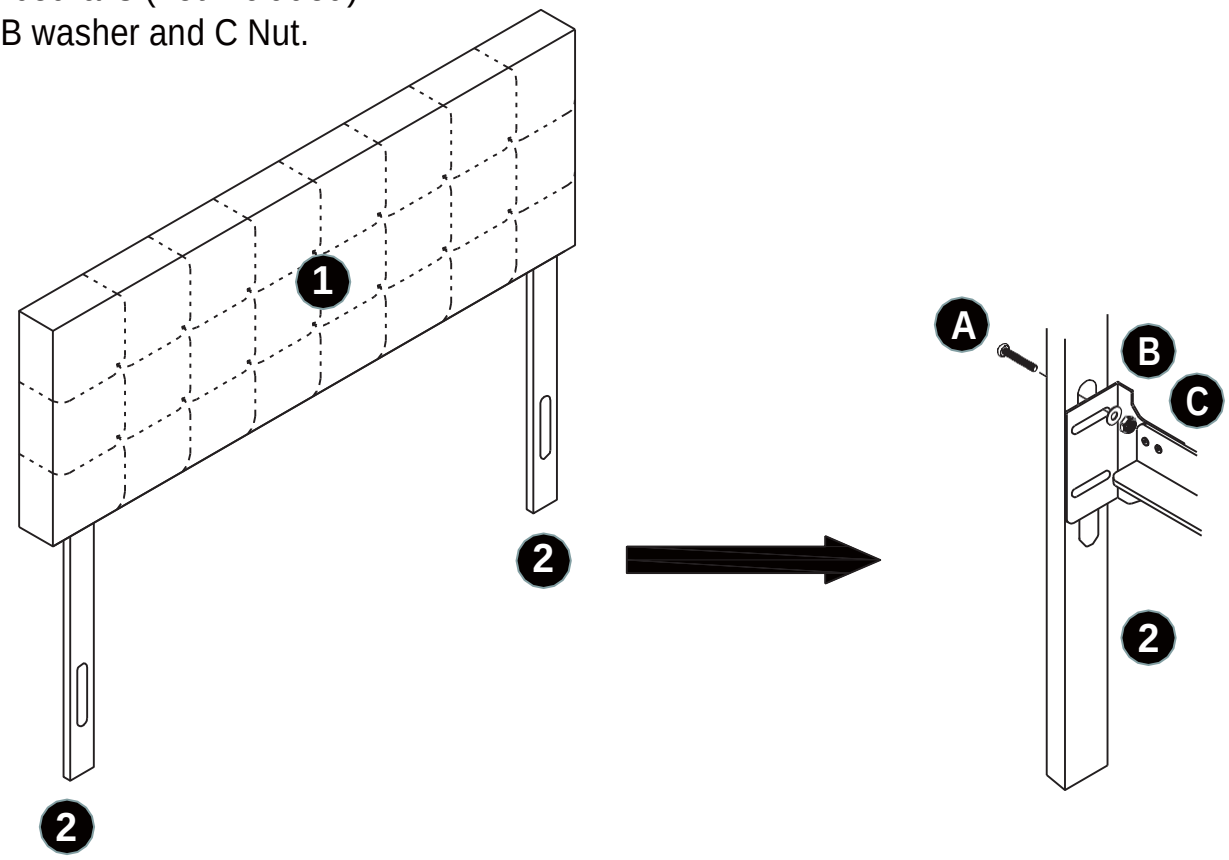

ASSEMBLY INSTRUCTIONS

1

Measure using paper wall mount template (included in the back of instructions) to mark your holes and ensure your mounts are even and level. Drill (tool required - not included) small pilot holes and install Dx4 into the pilot holes with hammer (tool required - not included). Insert E (x2) into each hole of 3 and tighten with screwdriver into D wall anchors. Repeat for other E. .

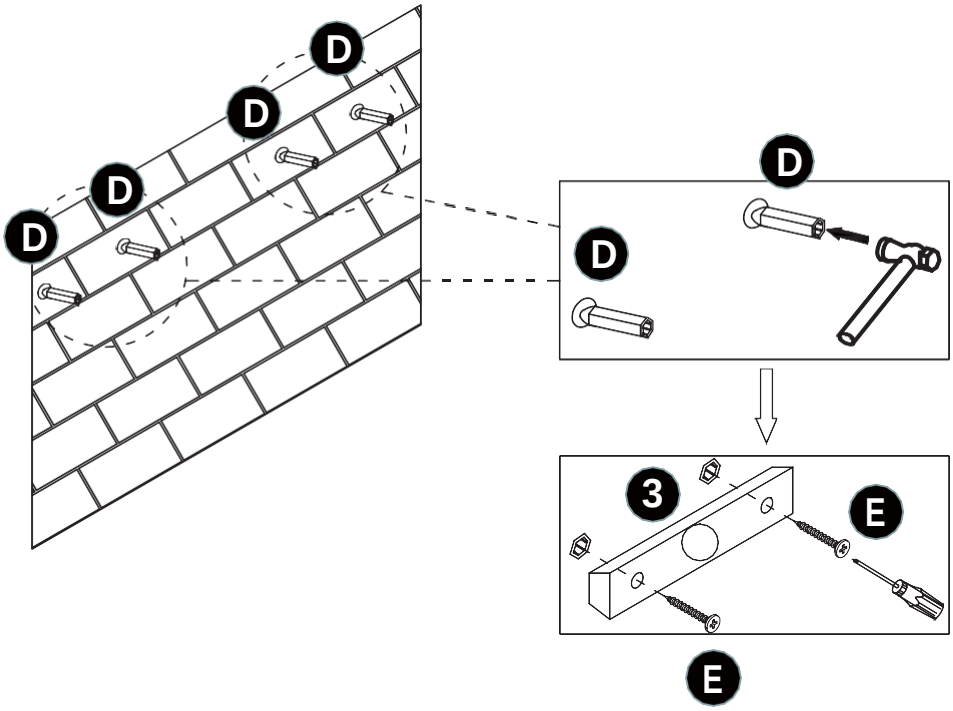

2

Hang 1(×1) on the wall.

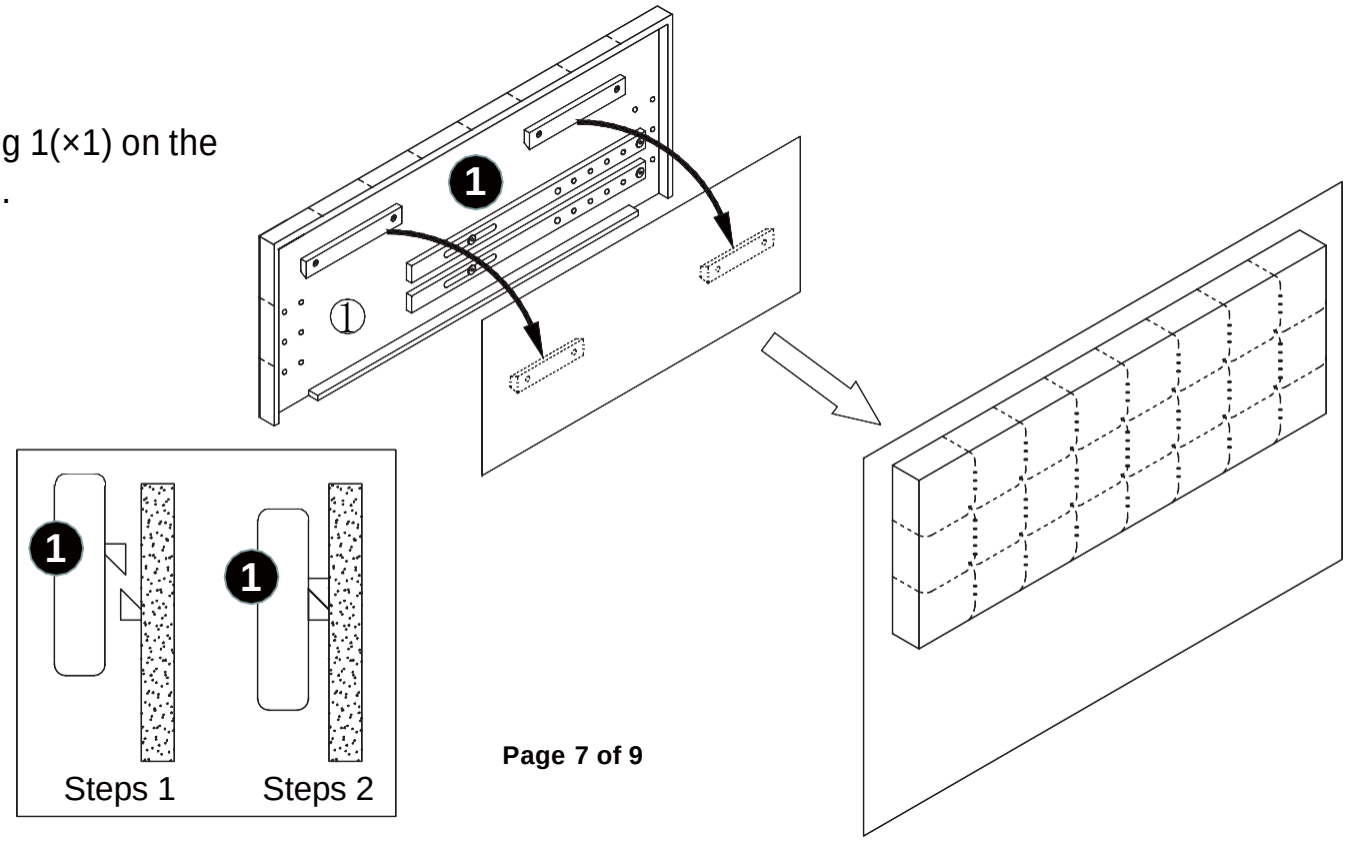

ASSEMBLY INSTRUCTIONS

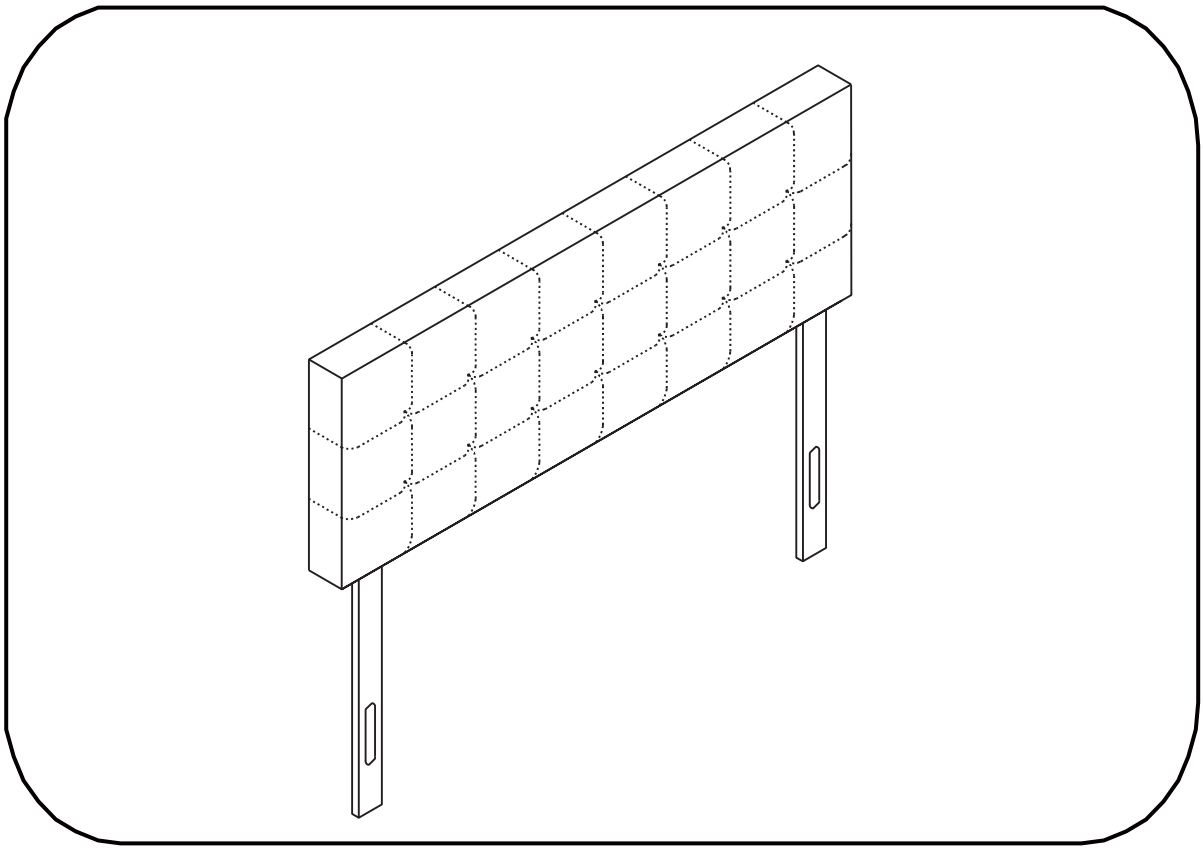

CONGRATULATIONS, YOUR NAOMI HOME JESSENIA CRYSTAL TUFTED HEADBOARD IS COMPLETE!

NAOMI HOME®

www.NaomiHome.com
MADE IN CHINA

Product Packaging Information

Model #:_____

Color:_____

Shipment Ref. #:_____

Date: _____

ASSEMBLY INSTRUCTIONS

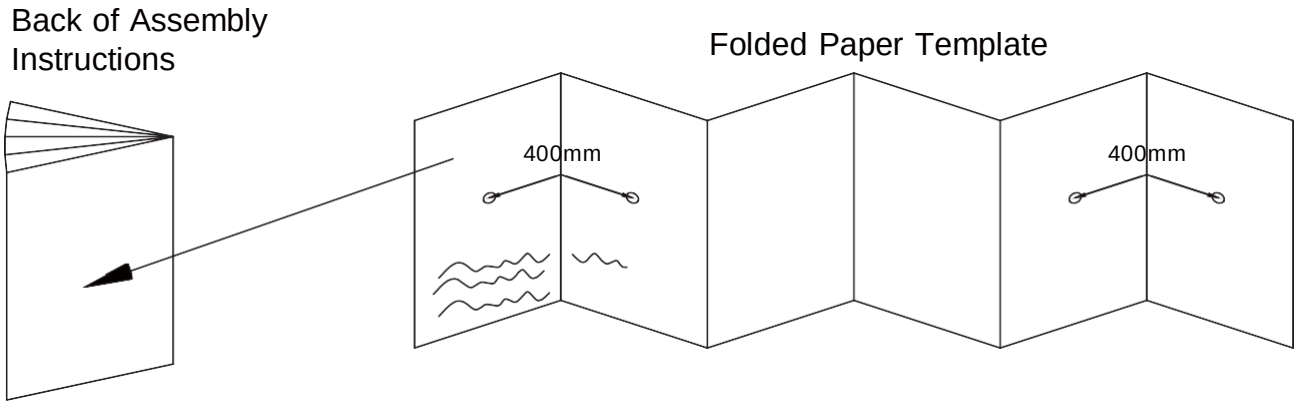

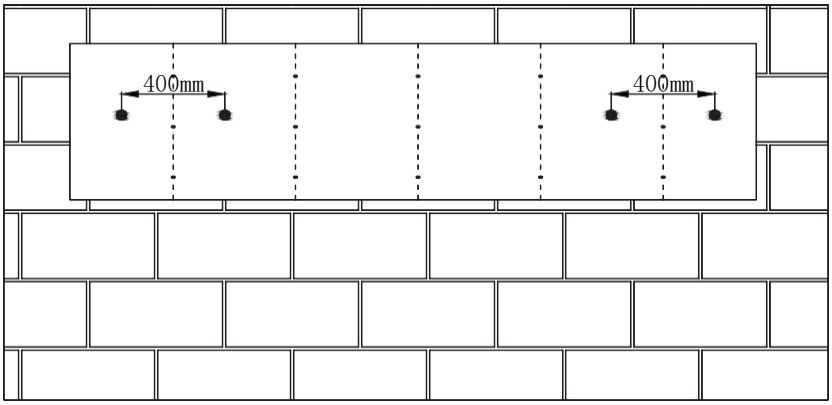
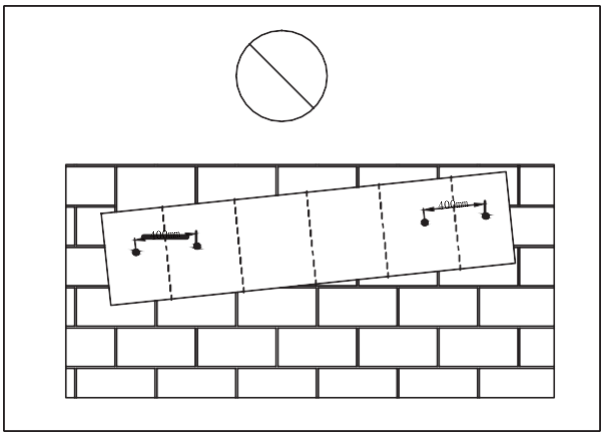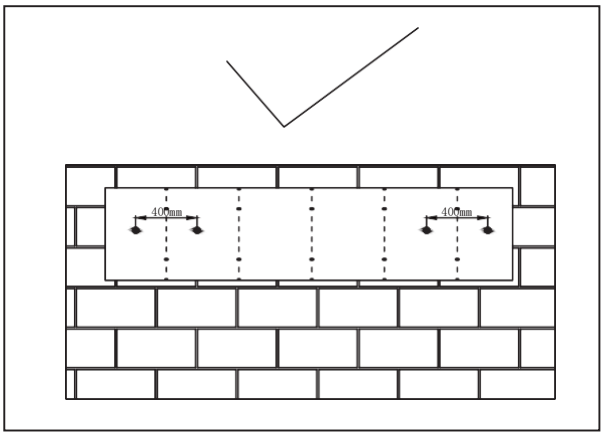
Make sure your template is level before marking your holes. Use masking tape to temporarily secure template on wall when ensuring paper is completely flat and even. Use a level to adjust position. Then press pencil through center of marked holes on template to mark pilot hole target behind paper. Remove paper template when satisfied with placementand proceed to Wall Mount Instruction step 1.