VEIKOUS

Aluminium Greenhouse

ASSEMBLY INSTRUCTIONS

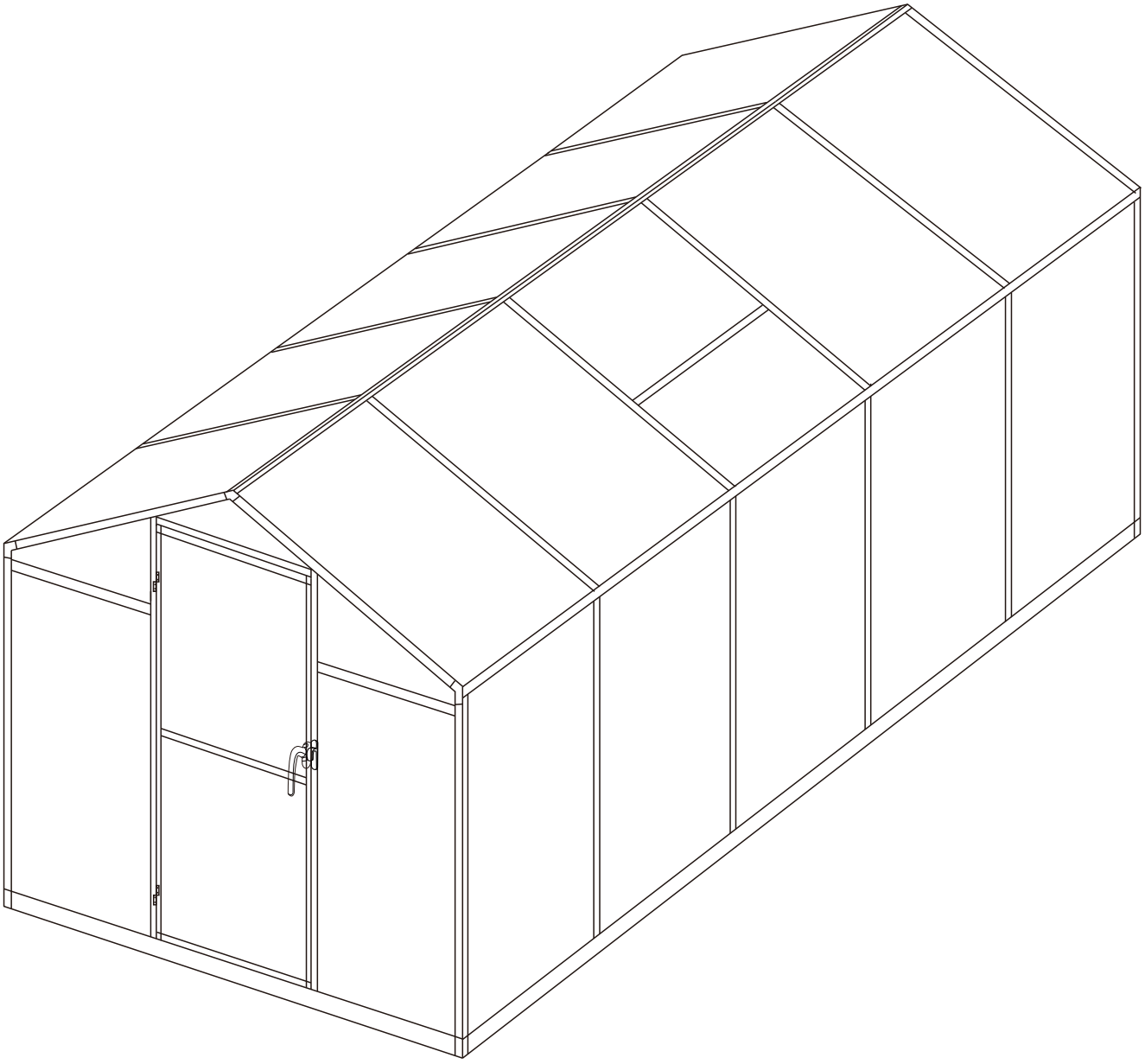

www.veikous.com

customerservice@veikous.com

Please read the entire instruction carefully before assembly. It is HIGHLY RECOMMENDED familiarizing yourself with the parts and double check the appropriate parts for each step.

STOP

MISSING A PART?
CALL US BEFORE GOING BACK TO THE STORE

The store where you made your purchase
Does not stock parts for this item.
If you have assembly questions or you are missing or have damaged parts,please call

1-858-324-1911

(Mon - Sun, 10:00 am to 7:00 pm EST)

you can also e-mail customerservice@veikous.com

or visit www.veikous.com

Please prefer email contact. Due to busy lines, there may be a wait for calls to be answered.

Please have the following information ready when you contact us, so we can assist you promptly.

- Order number or PO number (you can find the info on your invoice, receipt or platform account).
- The model number of the product (printed on the package box).
- Description of the part from the parts list.

- Read entire assembly manual,paying special attention to the important tips and safety information .
- Ensure there are no missing pieces by first separating and identifying all parts.
- Make sure to check packing material for small parts that may have fallen out during shipment.
- Structures are not intended for public use.The Company does not warranty any of its residential structures subjected to commercial use such as:Daycare,Preschool,Nursery School,Recreational Park,or any similar Commercial Application.
- This manual contains helpful information concerning assembly preparation,installation procedure and required maintenance.
- Always keep safety in mind as your structure is being built.
- Keep these instructions for future reference.

RECOMMENDATIONS OF INCREASING WIND RATING OF GREENHOUSES

(NOT INCLUDED) ESPECIALLY IN AREAS WITH STRONG WINDS, RAIN AND SNOW



Bolt the greenhouse down to the ground with either a concrete slab, base plates or flanged feet

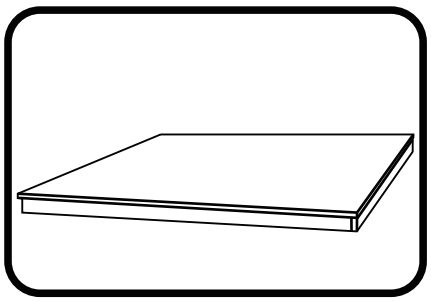

Using extra tie-down kits

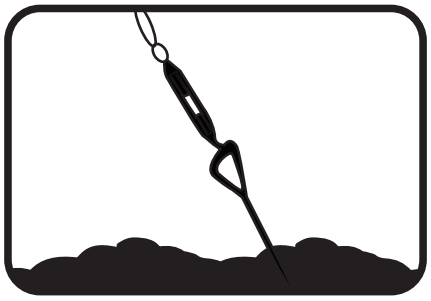

Using silicone sealant to seal the panels

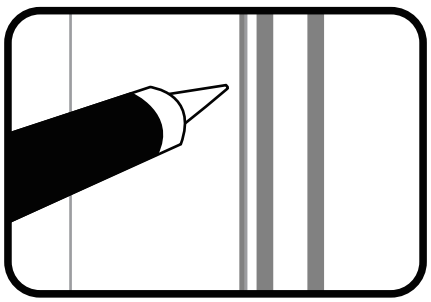

RECOMMENDATIONS OF INCREASING WIND RATING OF GREENHOUSES ESPECIALLY IN AREAS WITH STRONG WIND，RAIN AND SNOW

Fix wood planks or boards（NOT INCLUDED） with screws on the roof and side walls（AS HIGHLIGHTED）of the greenhouse to enhance the wind resistance level of the greenhouse.

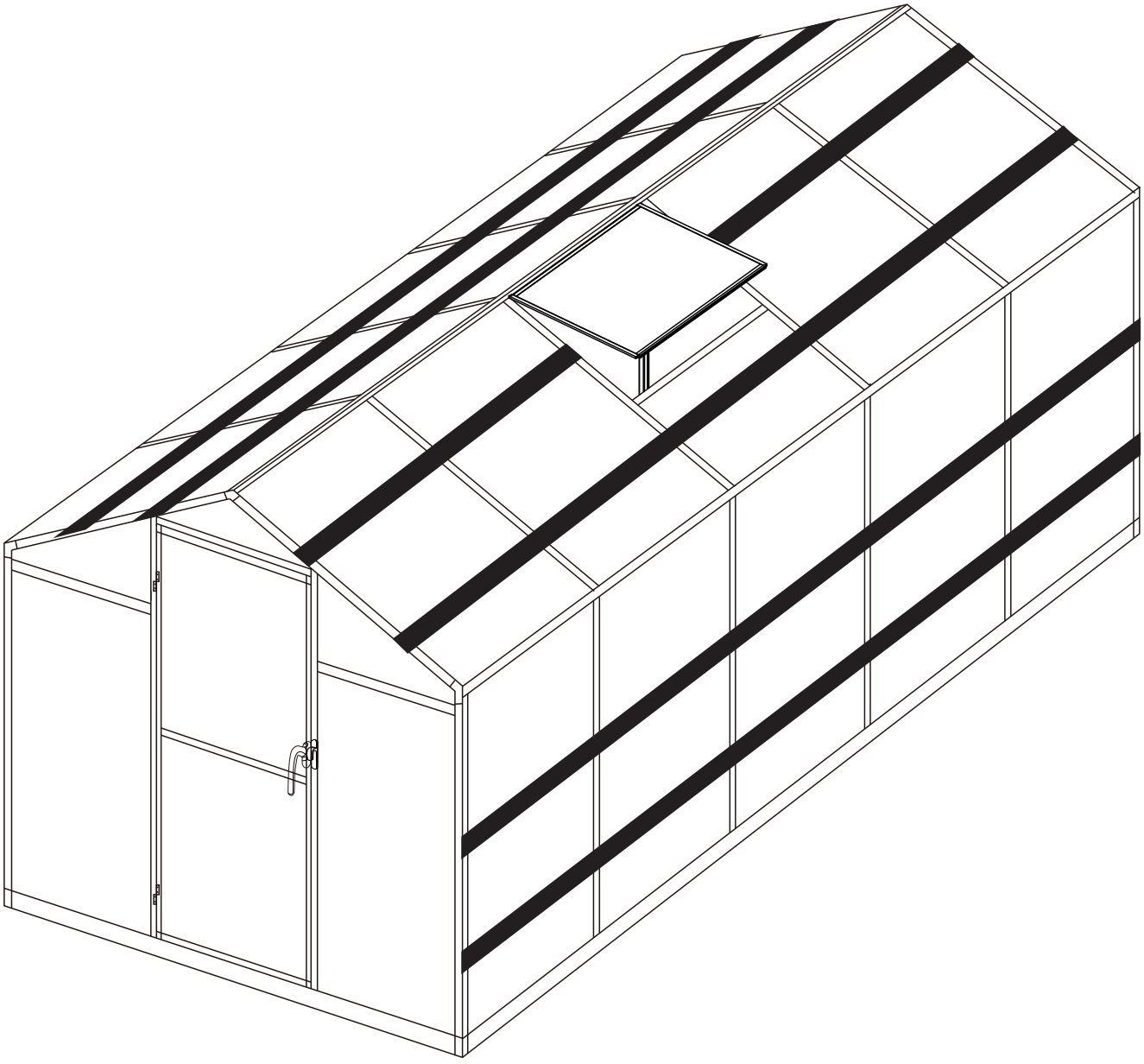



1. Two or more people are required for assembly.



2. You will need one or more stepladders.

3. Wearing protective gloves is recommended.





4. You may need a safety hat.



5. Use the hex keys in the box.



6. Please use a Phillips screwdriver.



7. Do not fully tighten screws prior to complete assembly.



8. For ease of construction, you may need to use a drill.

Aluminum Parts :

No.	Picture	Qty.	Size	No.	Picture	Qty.	Size
1	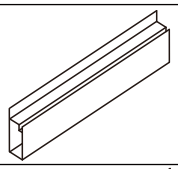	2		12	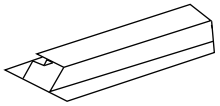	1	
2	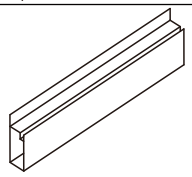	2		13	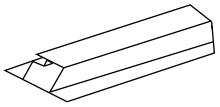	1	
2−1	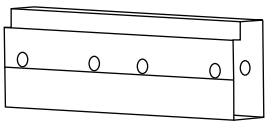	2		14	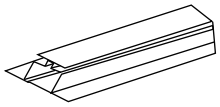	1	
3	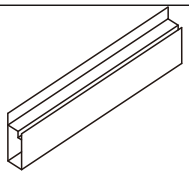	2		15	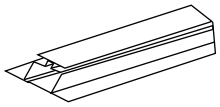	1	
5A	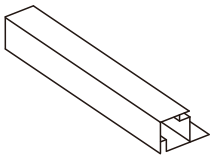	2		16	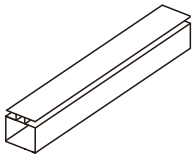	8	
5B	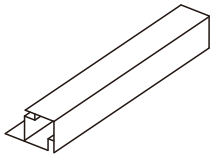	2		17	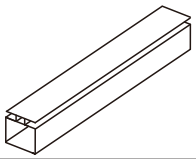	6	
6	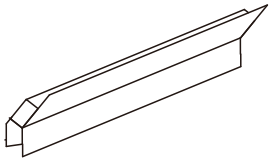	2		18A	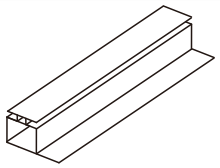	1	
7−1	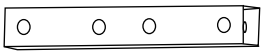	2		18B	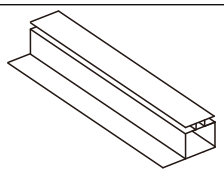	1	
7	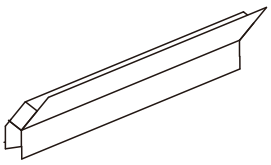	2		19	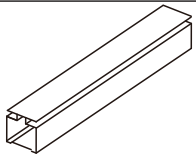	4	
8	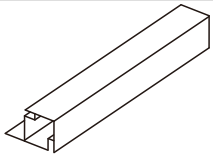	2		21	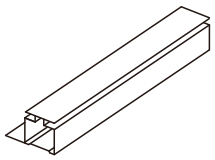	1	
9	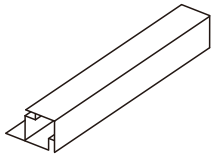	2		22	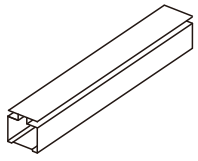	1	

No.	Picture	Qty.	Size	No.	Picture	Qty.	Size
23	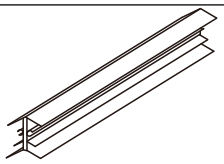	2		30-2	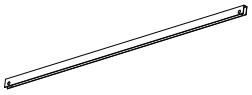	2	
23-1	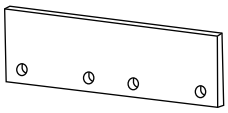	1		30-3		1	
24	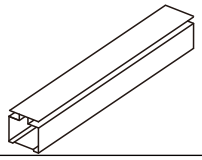	1			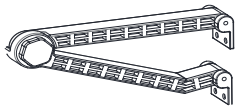	1	
25	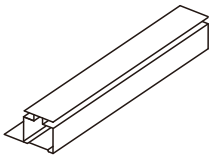	1		31	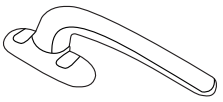	1	
26	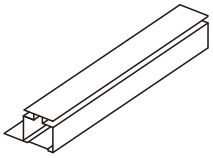	1		31A	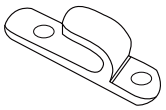	1	
27	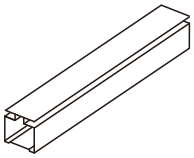	2					
28	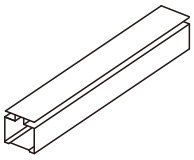	1					
30-1		1					

Plastic Parts:

No.	Picture	Qty.	Size	No.	Picture	Qty.	Size
32	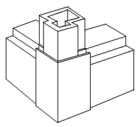	4		37	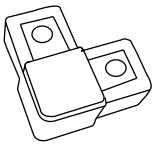	4	
33A	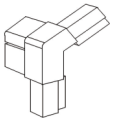	2					
33B	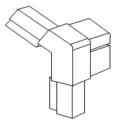	2					
34	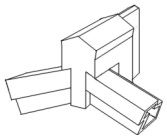	2					

Hardware:

No.	Picture	Qty.	Size	No.	Picture	Qty.	Size
42	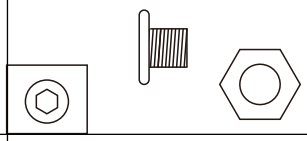	100	M6*15	45	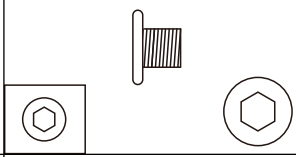	10	M6*35
44	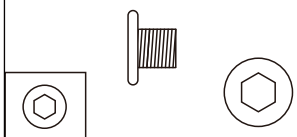	10	M6*30	46	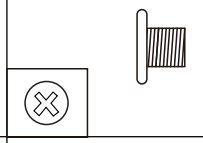	12	M6*15
47	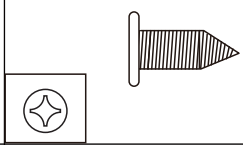	6	M4*16	48	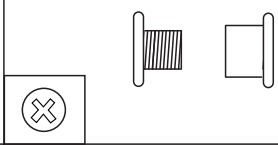	8	
		36	M6 nut	F1	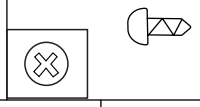	6	
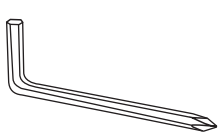				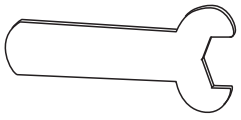			

Twin PC Board:

No.	Picture	Qty.	Size	No.	Picture	Qty.	Size
A	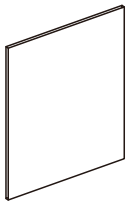	10		I		1	
B	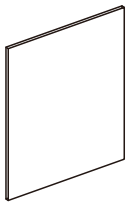	9		J	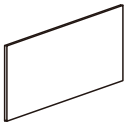	1	
D	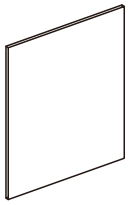	1		K	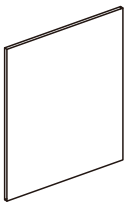	2	
E	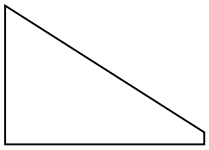	4		L	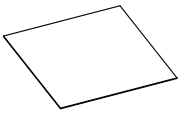	1	
F	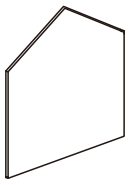	1					
G	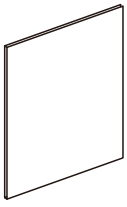	4					

CHECK LIST (BOX 1 OF 2)

PG0101-12

1 x2

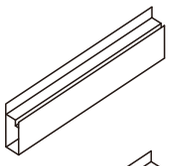

2 x2

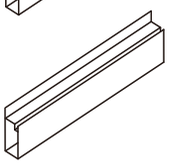

2-1 x2

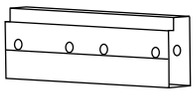

3 x2

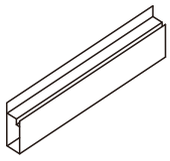

5A x2

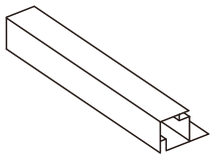

5B x2

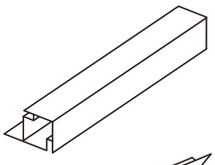

6 x2

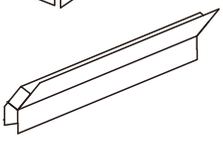

7-1 x2

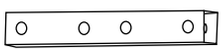

7 x2

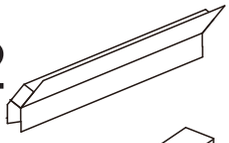

8 x2

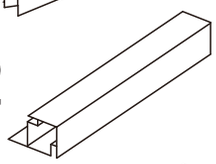

9 x2

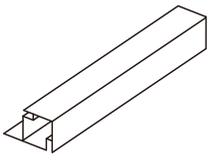

12 x1

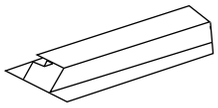

13 x1

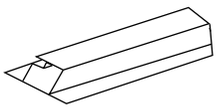

14 x1

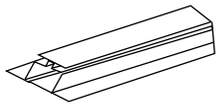

15 x1

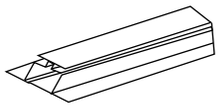

16 x8

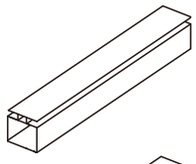

17 x6

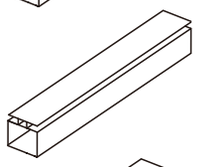

18A x1

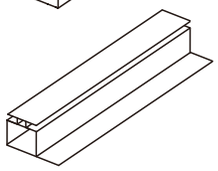

18B x1

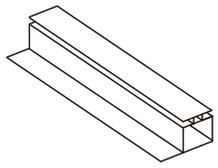

19 x4

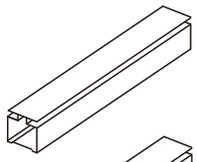

21 x1

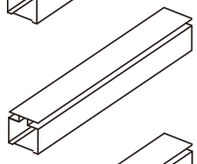

22 x1

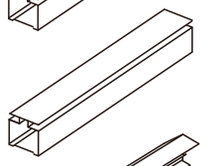

23 x2

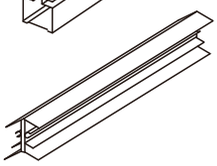

23-1 x1

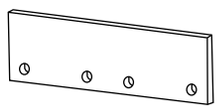

24 x1

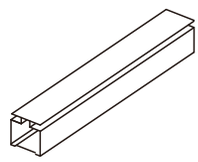

25 x1

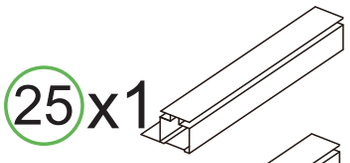

26 x1

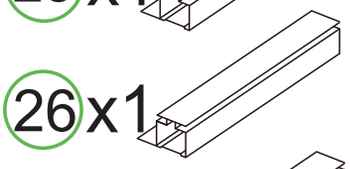

27 x2



28 x1



30-1 x1



30-2 x2



30-3 x1



31 x1



31A x1

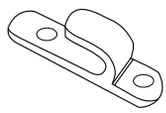

32 x4

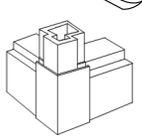

33A x2

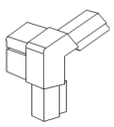

33B x2

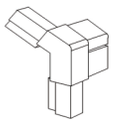

34 x2

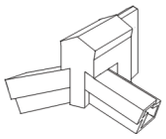

37 x4

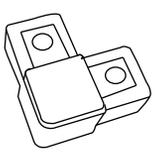

42 x100

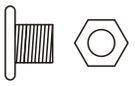

44 x10

45 x10

46 x12

47 x6

48 x8

F1 x6

x1

x36

CHECK LIST (BOX 2 OF 2)

PG0101-12

A x10

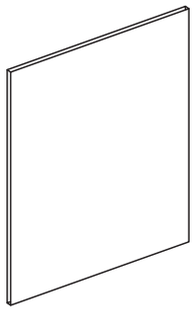

G x4

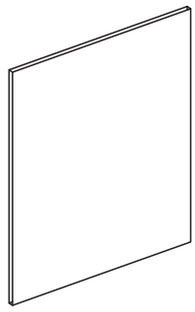

B x9

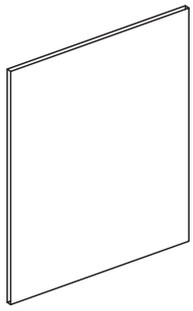

I x1

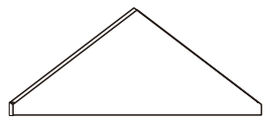

D x1

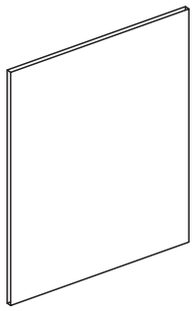

J x1

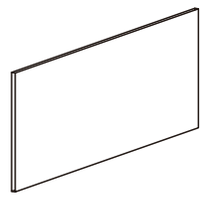

E x4

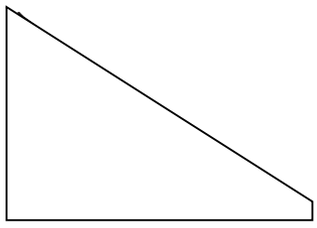

K x2

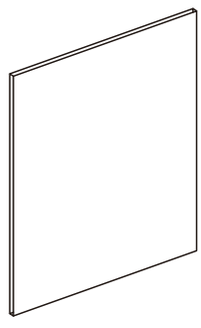

F x1

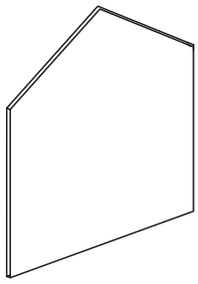

L x1

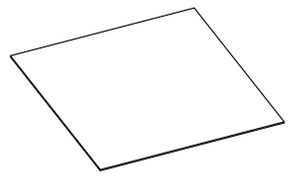

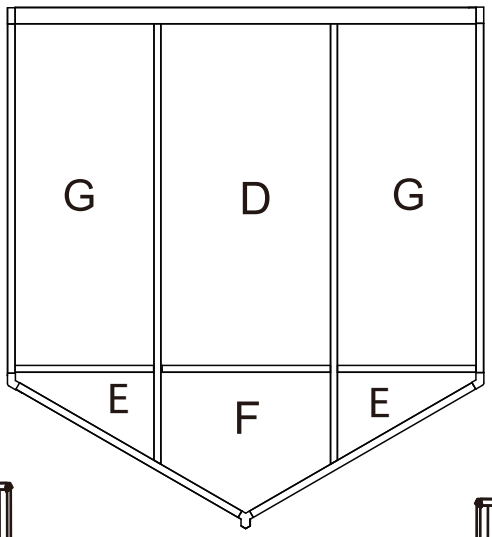

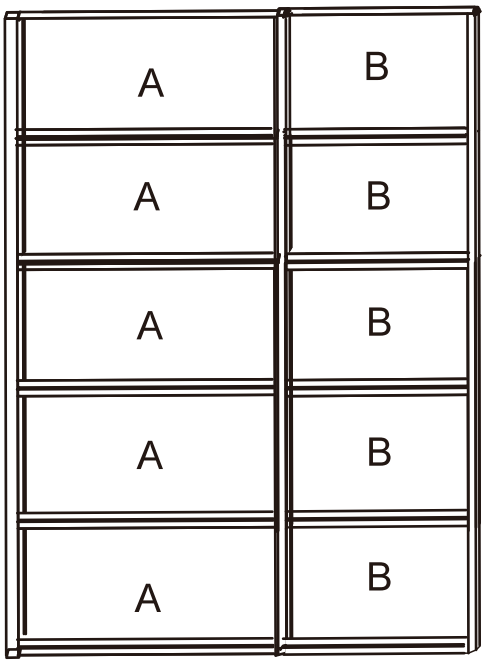

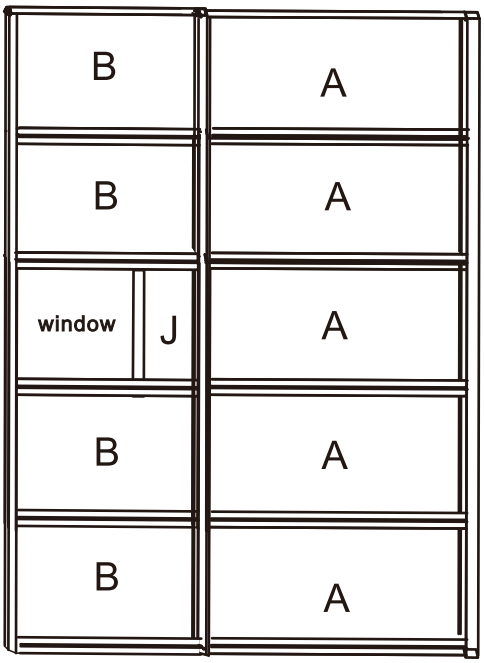

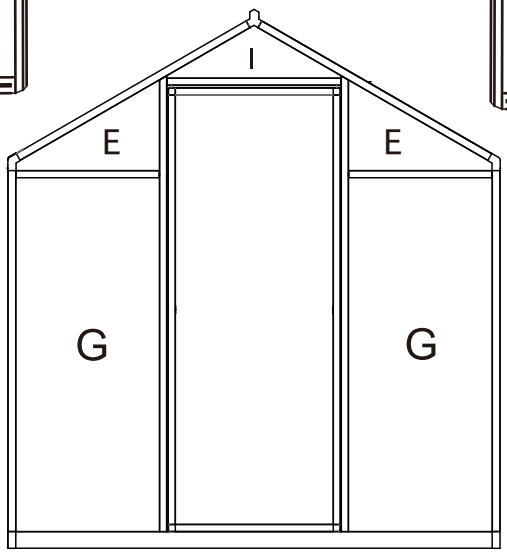

Note: The film on both sides of the PC board needs to be removed before assembly

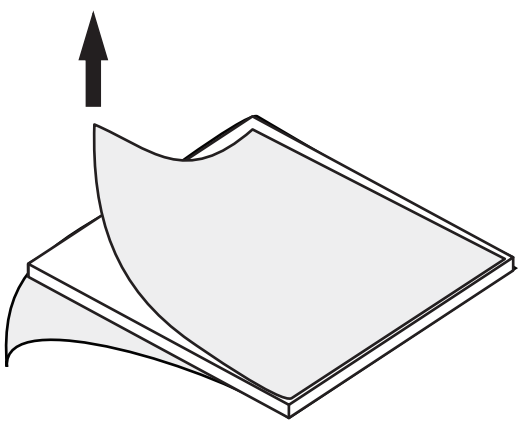

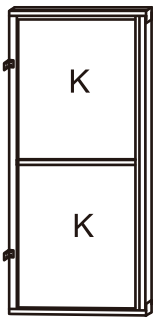

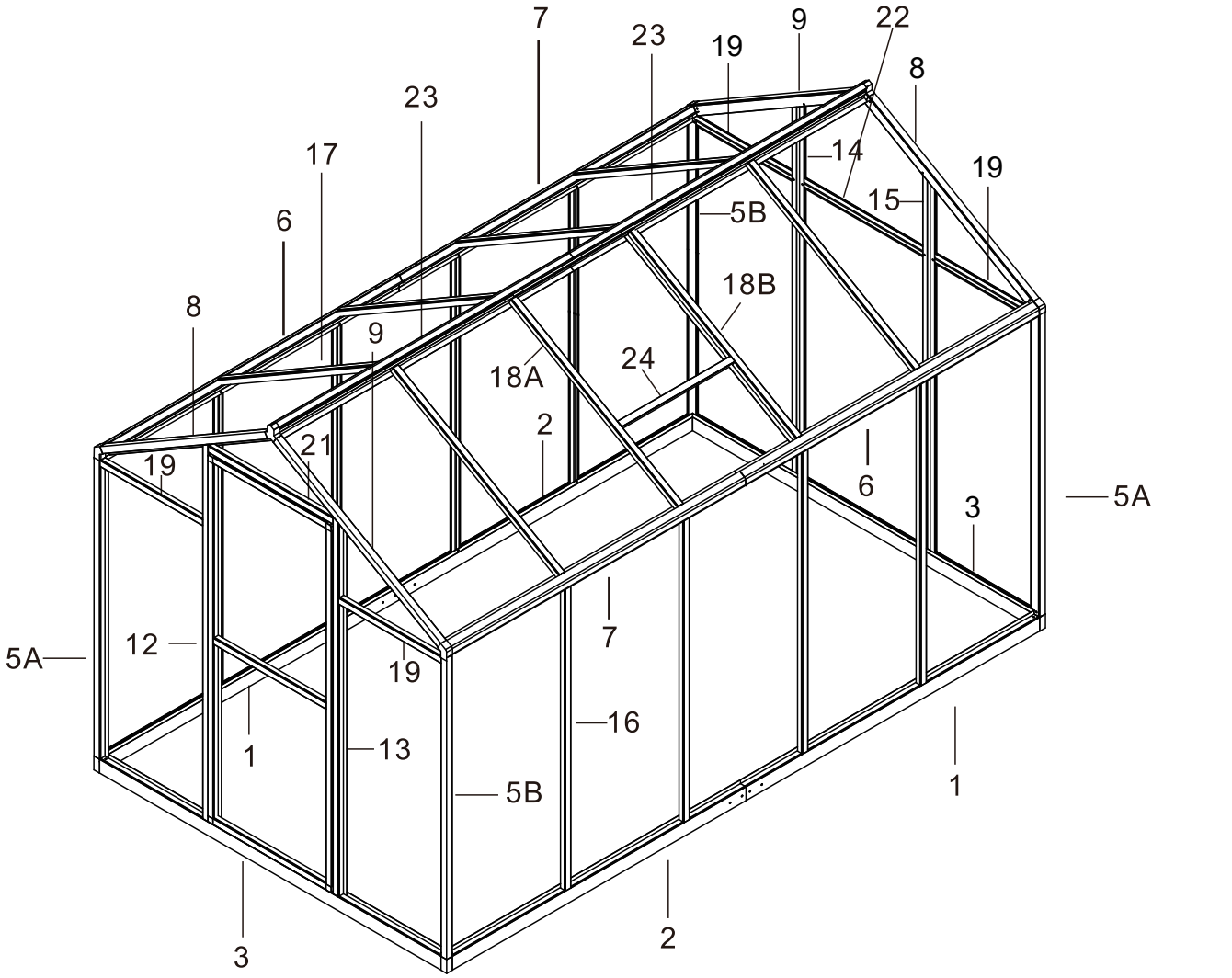
7
23
19
9
22
8
23
17
14
19
6
15
5B
18B
8
9
18A
24
2
21
19
6
3
5A
5A
12
19
7
1
13
16
5B
1
3
2

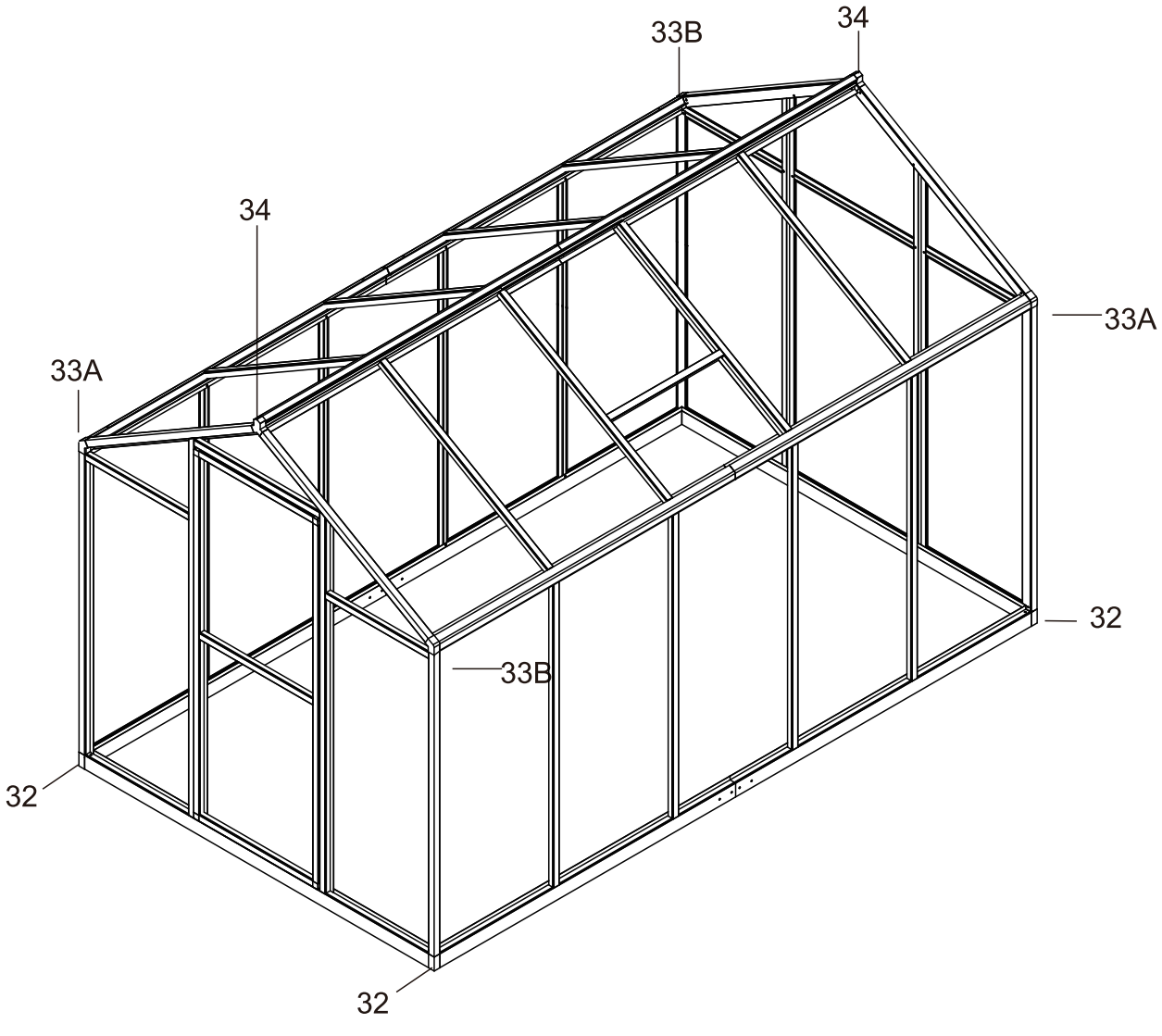
33B
34
34
33A
33A
32
33B
32
32

Step 1: Base Frame Assembly

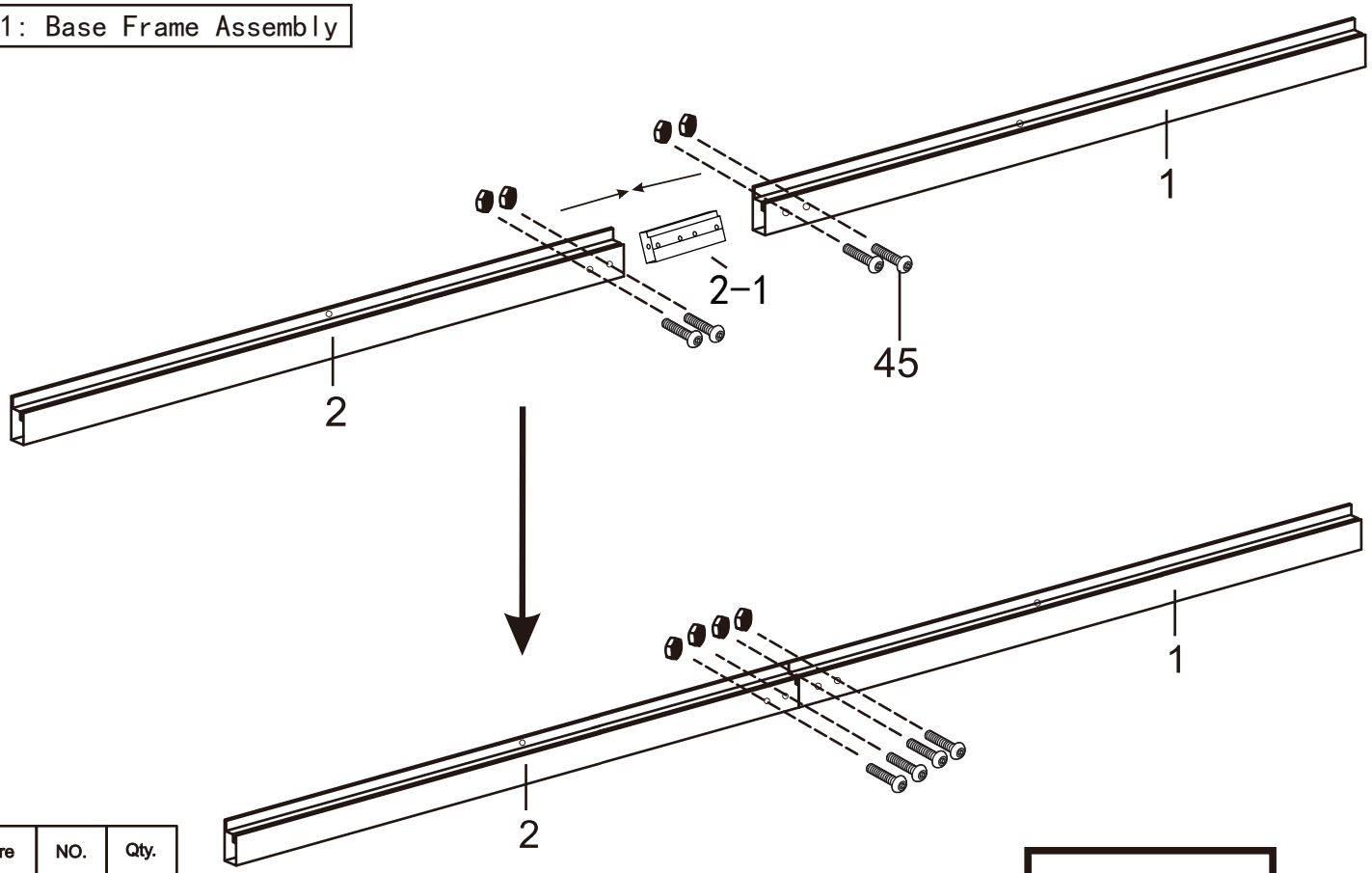

Picture	NO.	Qty.
	1	2
	2	2
	45	8

X2

Step 2: Pre-Assembled Base Frame Installation

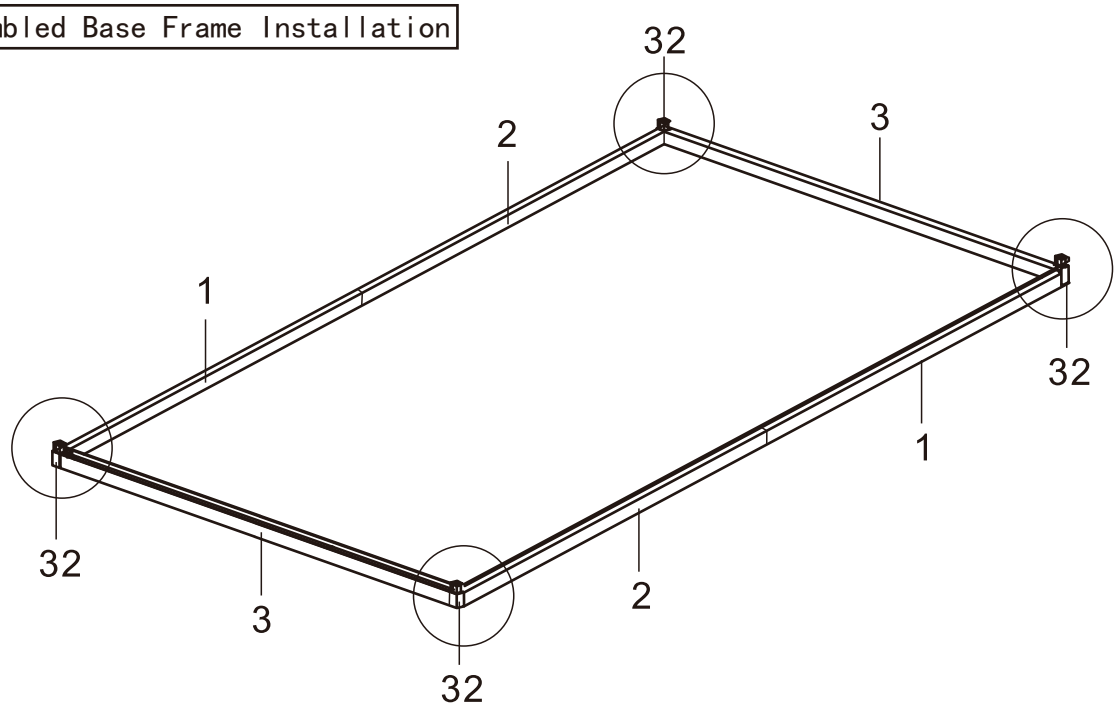

Picture	NO.	Qty.
	3	2
	32	4
	42	8

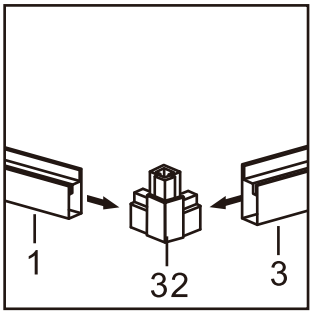

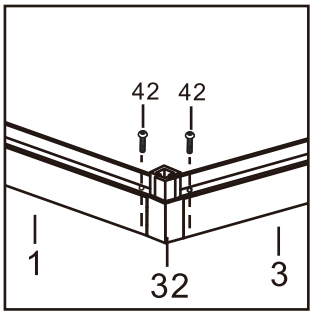

Step3-1: Back Wall Frame Assembly

Picture	NO.	Qty.
	5A	1
	5B	1
	42	2

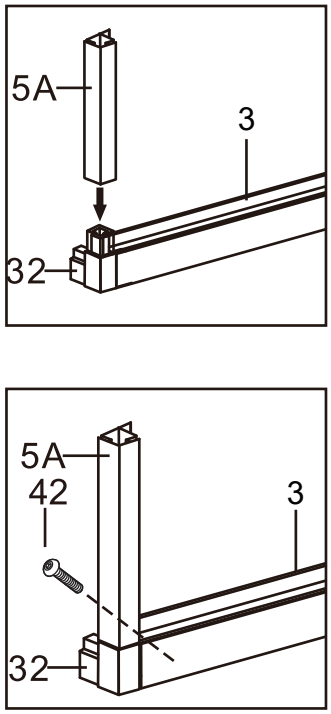

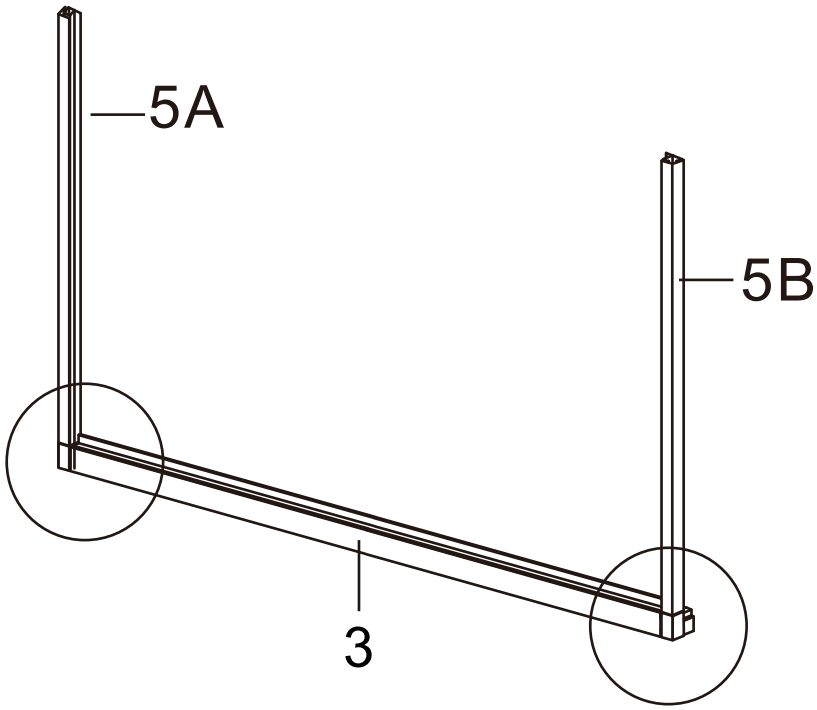

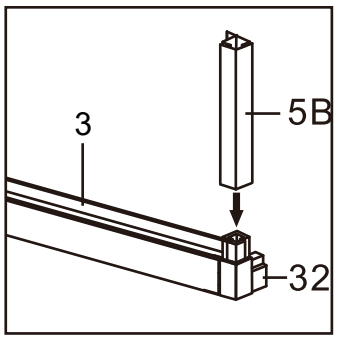

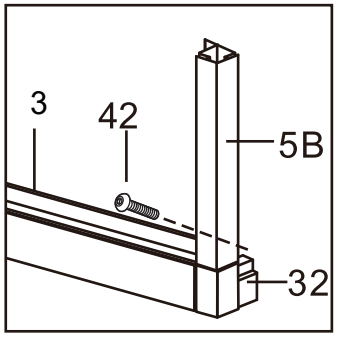

Step3-2: Back Wall Frame Assembly

Picture	NO.	Qty.
	14	1
	15	1
	42	2

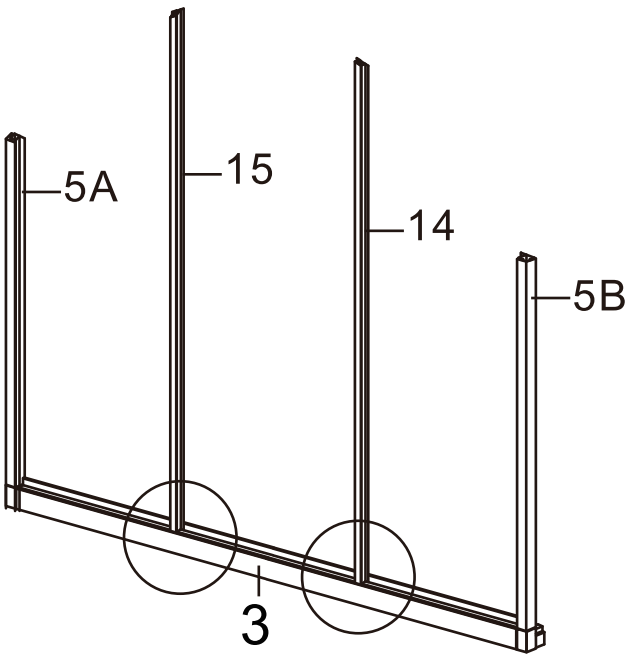

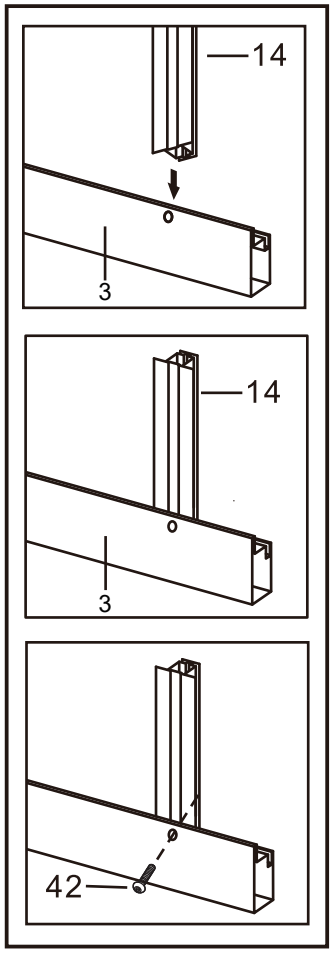

Step3-3: Back Wall Assembly

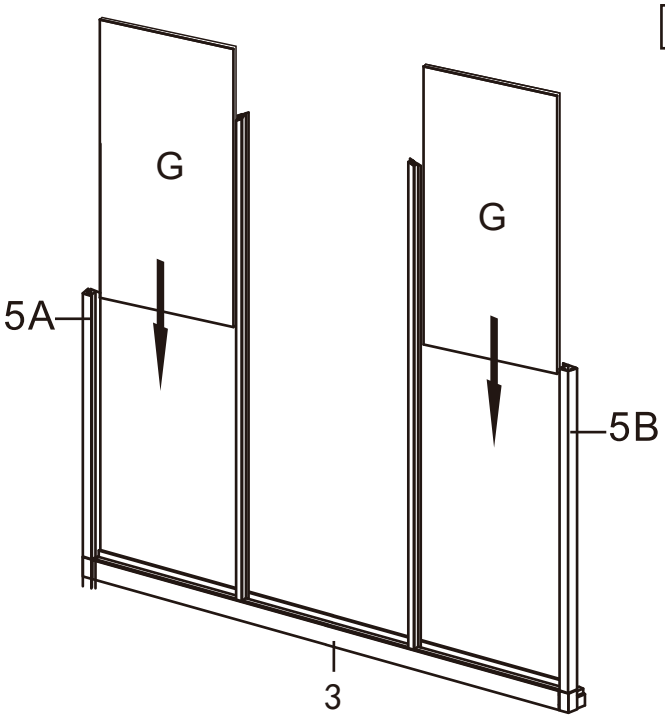

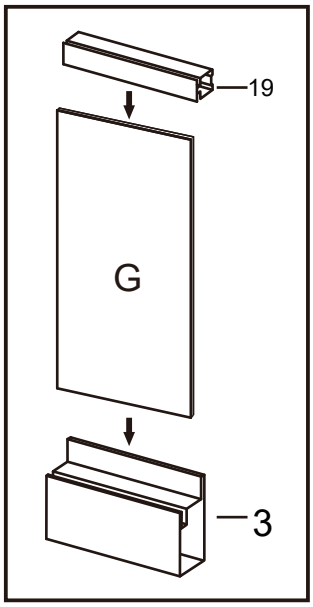

Picture	NO.	Qty.
	G	2
	19	2

Step3-4: Back Wall Frame Assembly

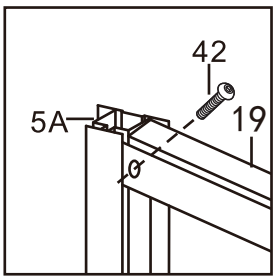

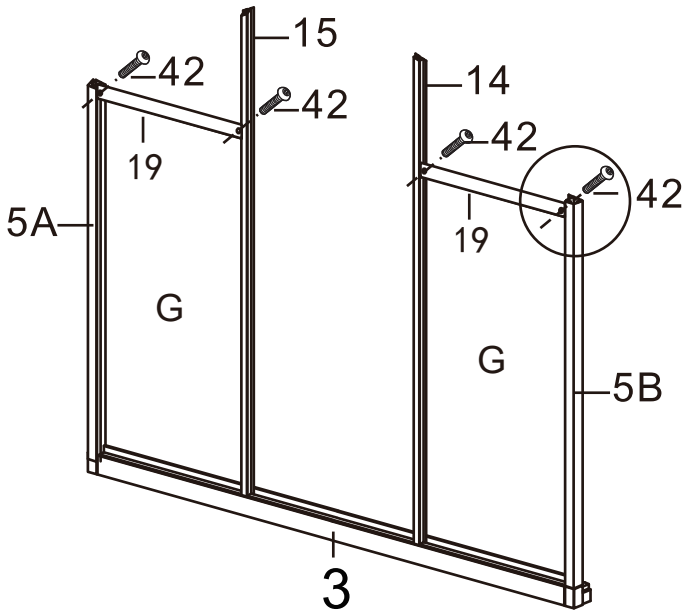

Picture	NO.	Qty.
	42	4

Step3-5: Back Wall Assembly

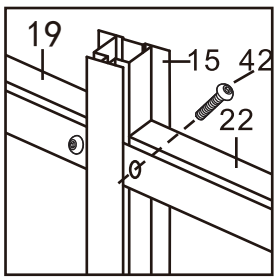

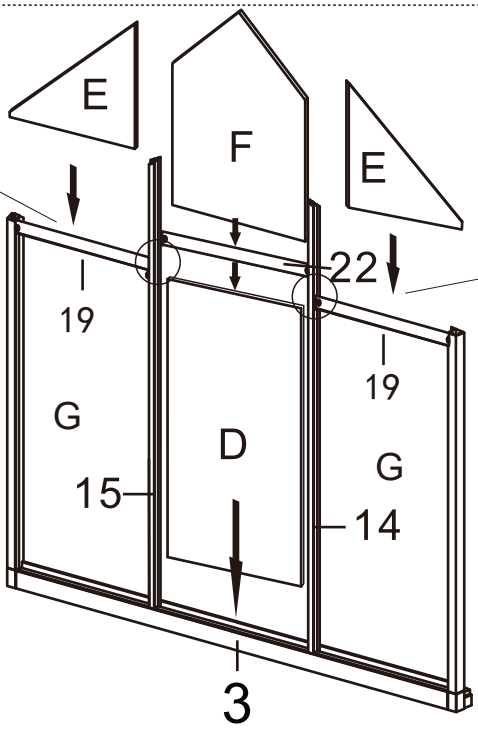

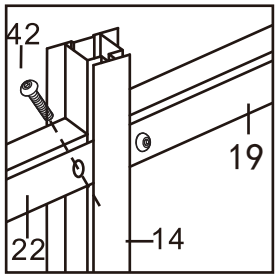

Picture	NO.	Qty.
	D	1
	F	1
	E	2
	22	1
	42	2

Step3-6: Back Wall’s Plastic Parts and Gable Frame Assembly

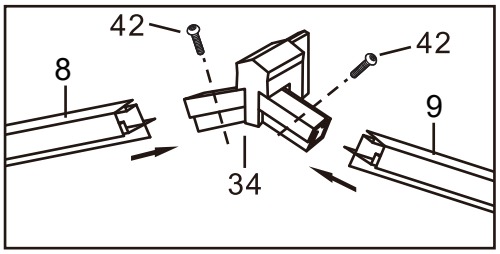

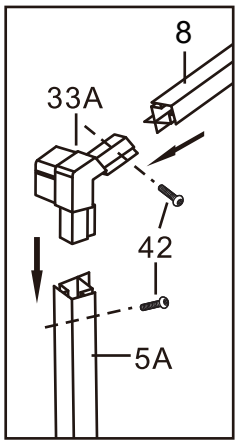

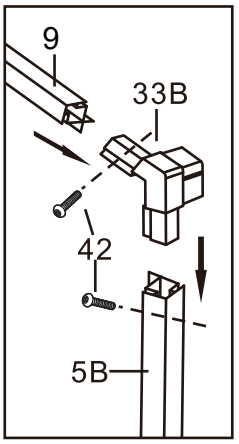

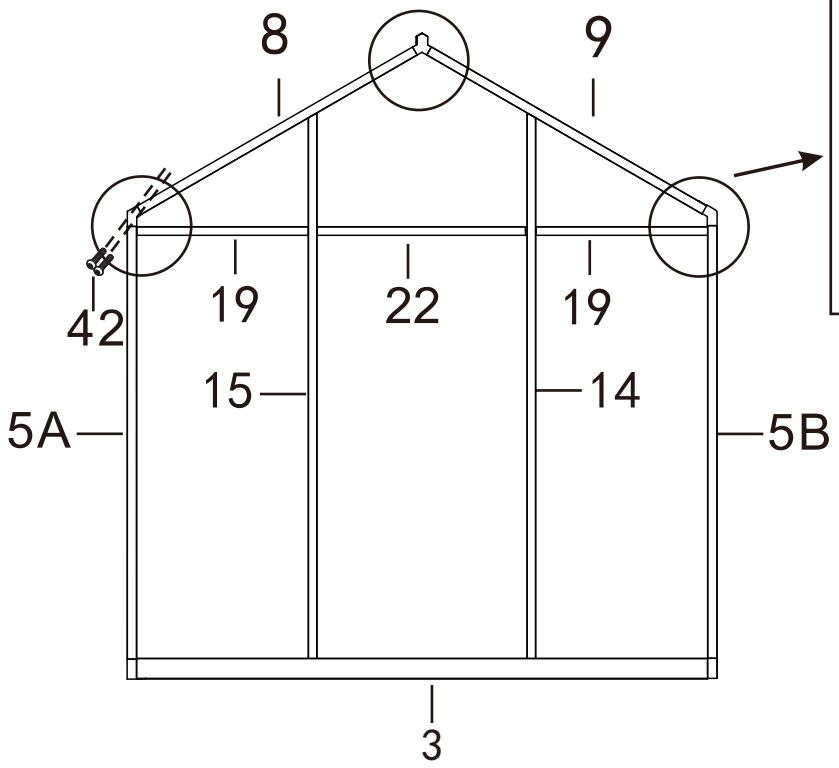

Picture	NO.	Qty.
	8	1
	9	1
	34	1
	33A	1
	33B	1
	42	6

Step3-7: Back Wall’s Plastic Parts and Gable Frame Assembly

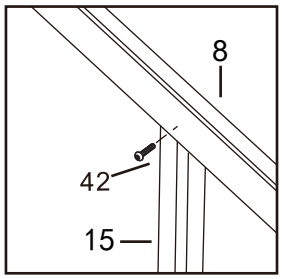

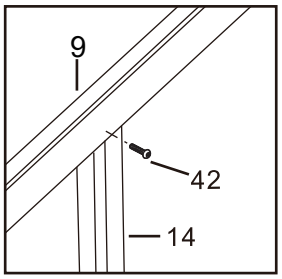

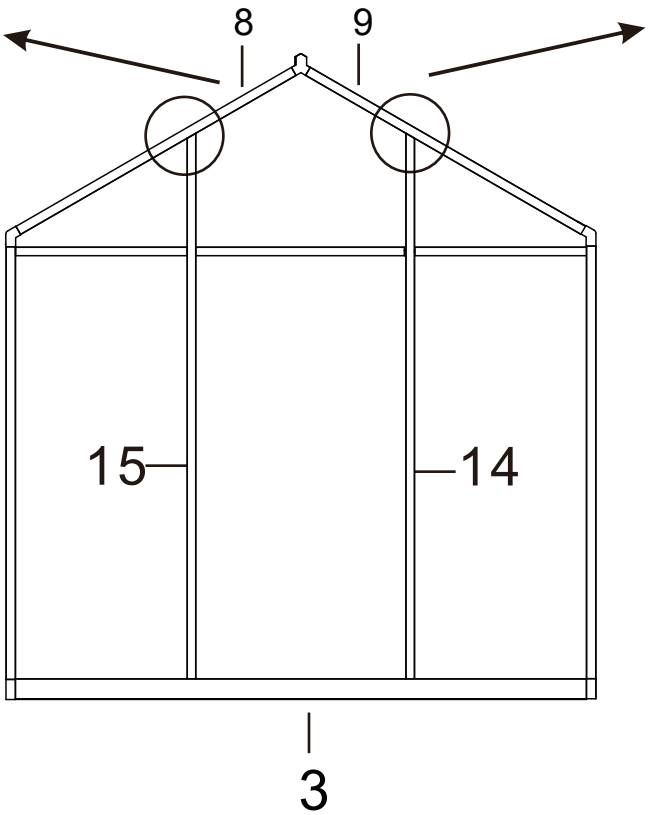

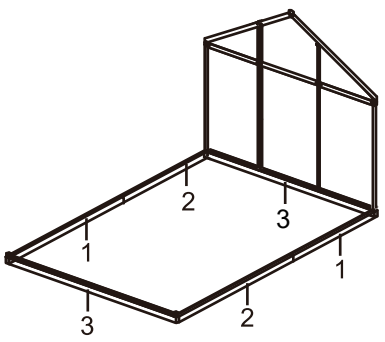

Picture	NO.	Qty.
	42	4

Step4-1: Front Wall Frame Assembly

Picture	NO.	Qty.
	5A	1
	5B	1
	42	2

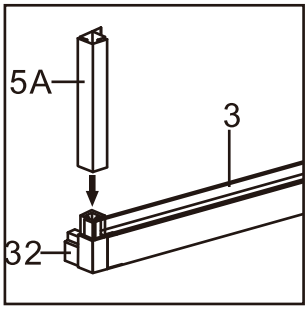

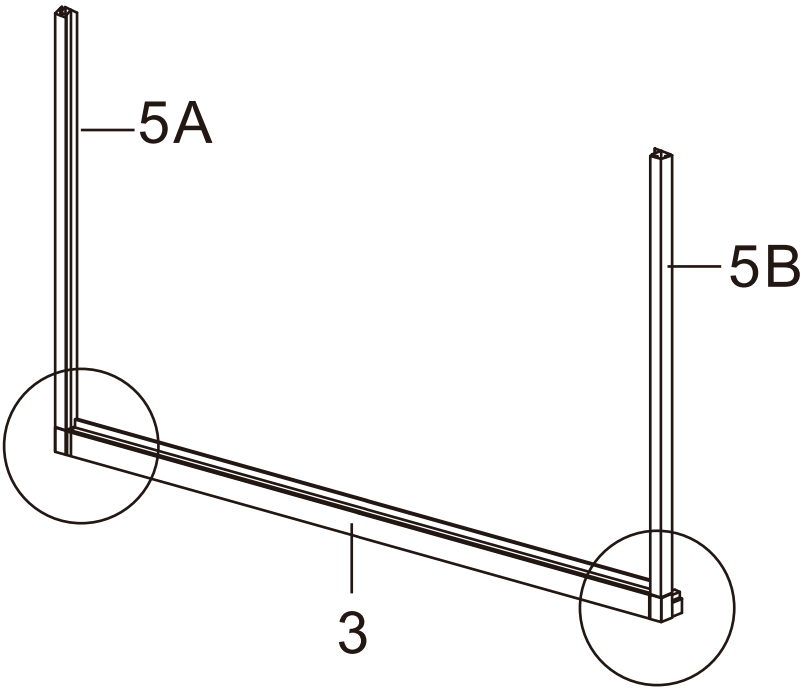

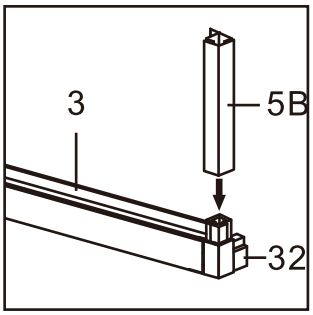

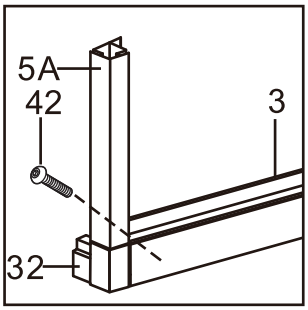

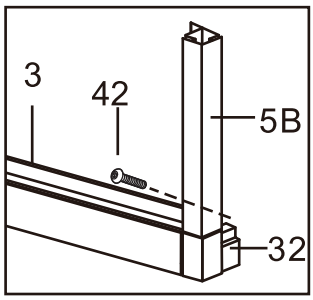

Step4-2: Front Wall Frame Assembly

Picture	NO.	Qty.
	12	1
	13	1
	42	2

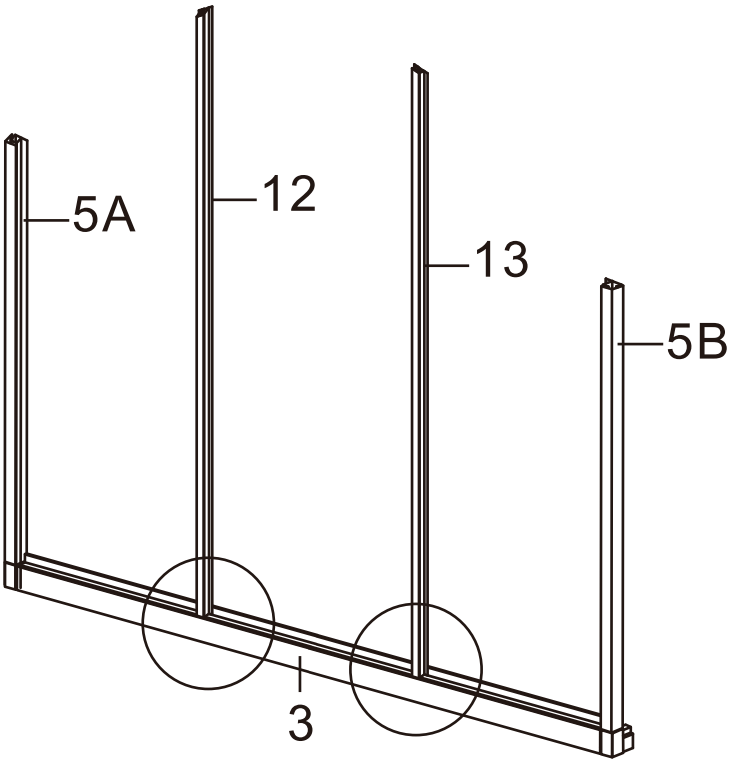

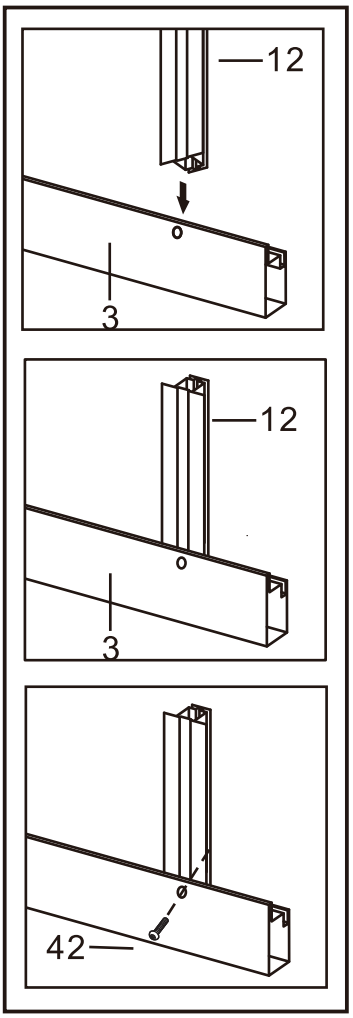

Step4-3: Front Wall Assembly

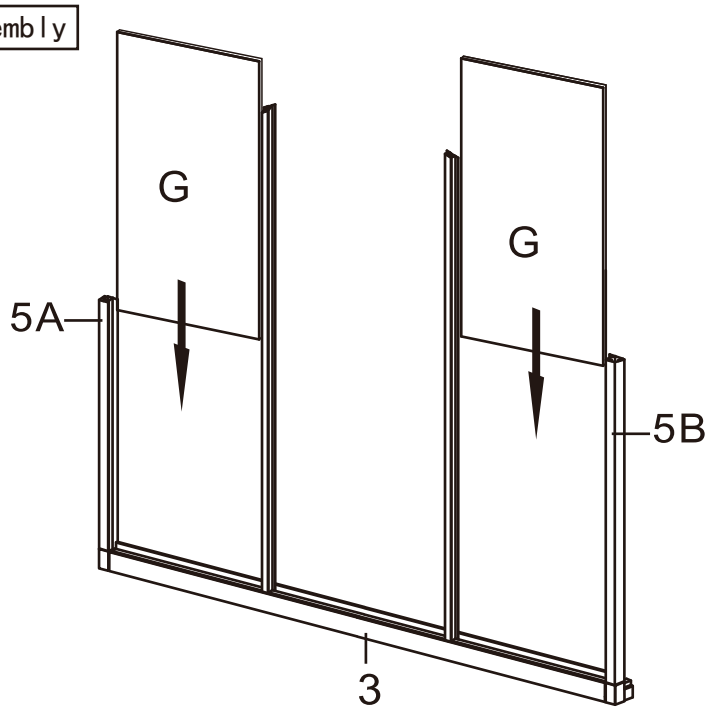

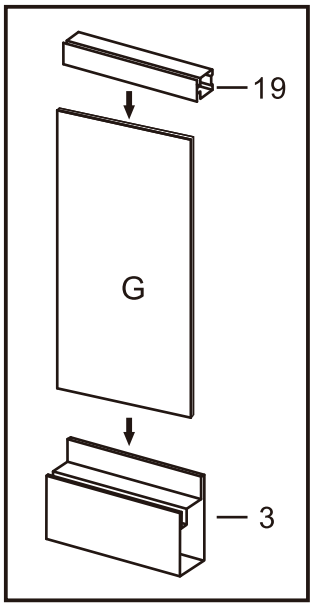

Picture	NO.	Qty.
	G	2
	19	2

Step4-4: Front Wall Frame Assembly

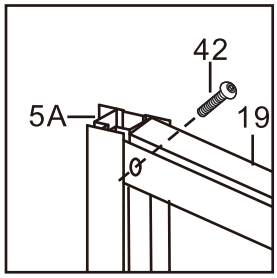

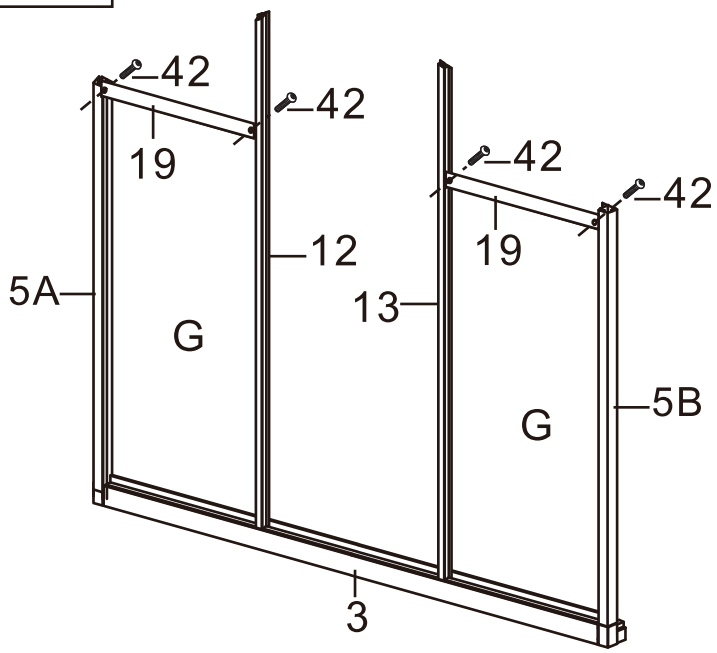

Picture	NO.	Qty.
	42	4

Step4-5: Front Wall Assembly

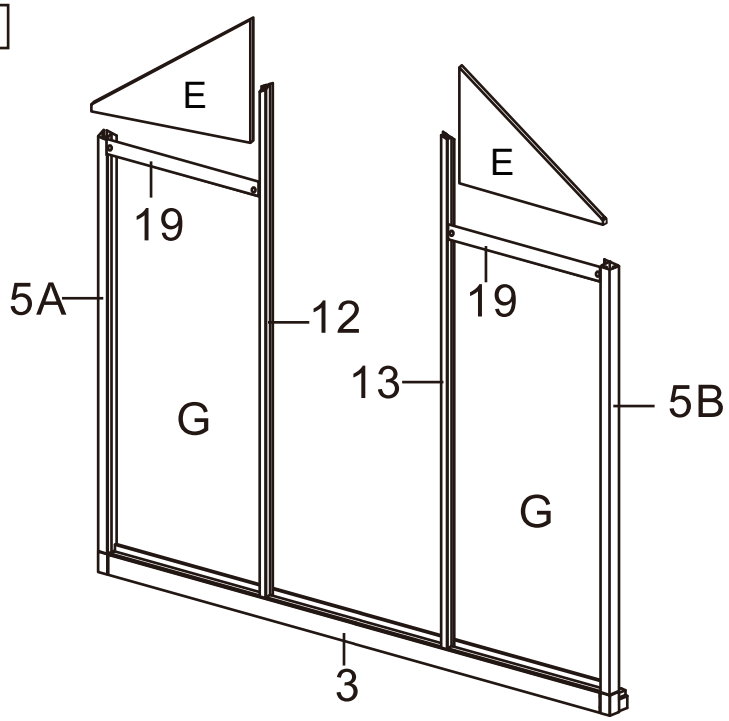

Picture	NO.	Qty.
	E	2

Step4-6: Front Wall’s Plastic Parts and Gable Frame Assembly

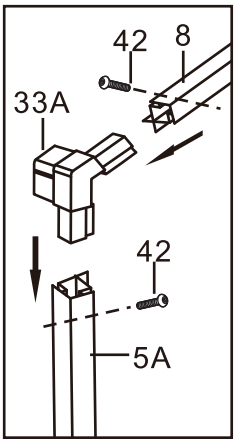

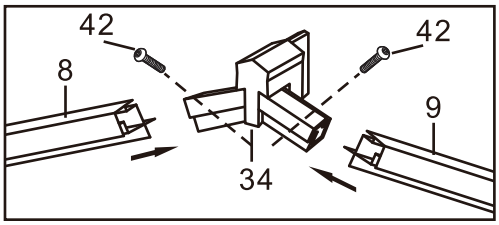

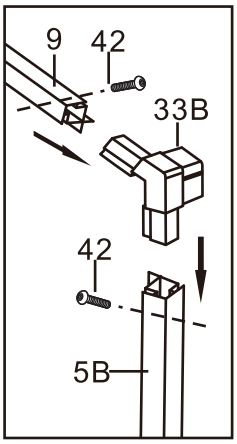

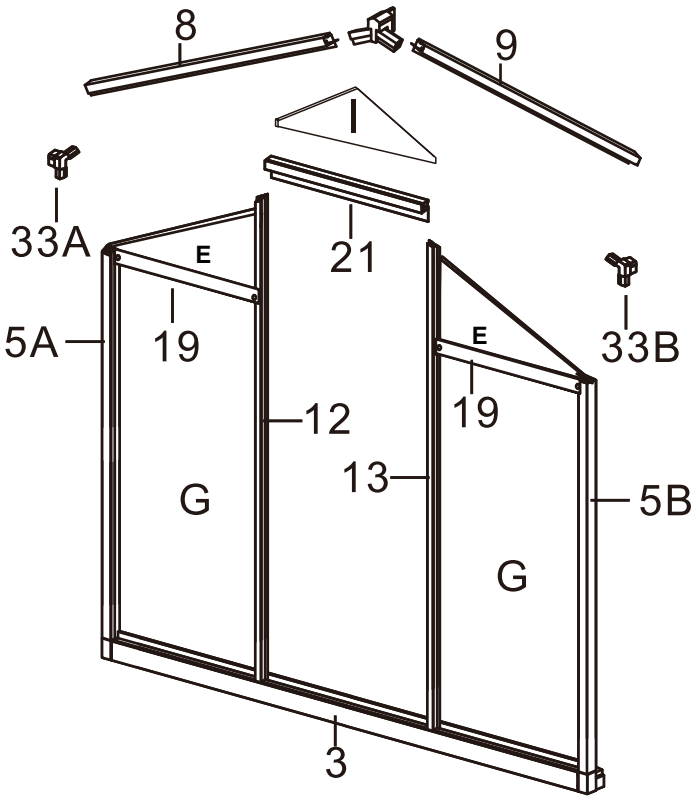

Picture	NO.	Qty.
	8	1
	9	1
	21	1
	33A	1
	33B	1
	34	1
	42	6
	I	1

Step4-7: Front Wall’s Plastic Parts and Gable Frame Assembly

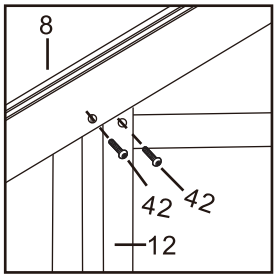

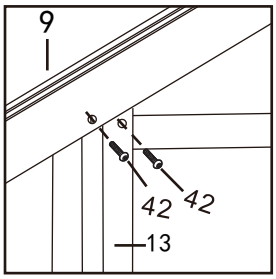

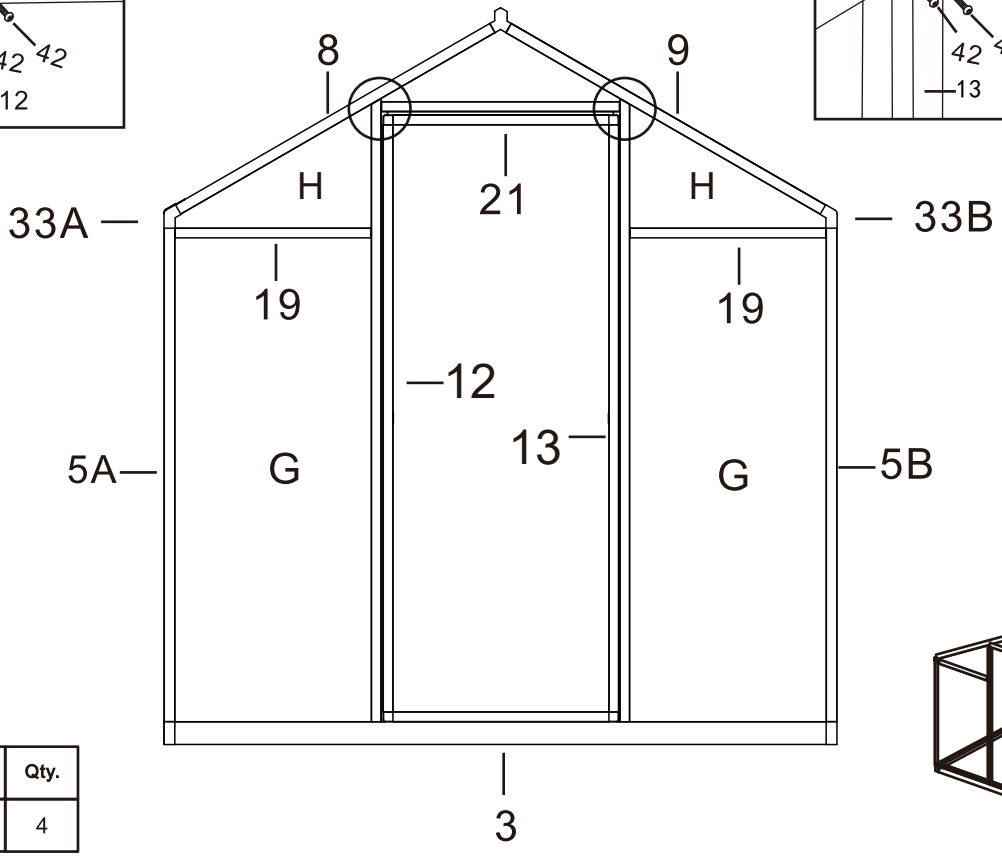

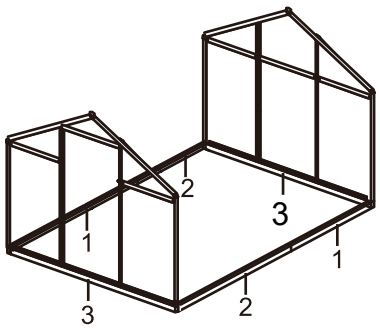

Picture	NO.	Qty.
	42	4

Step5-1: Side Roof Ridge Assembly

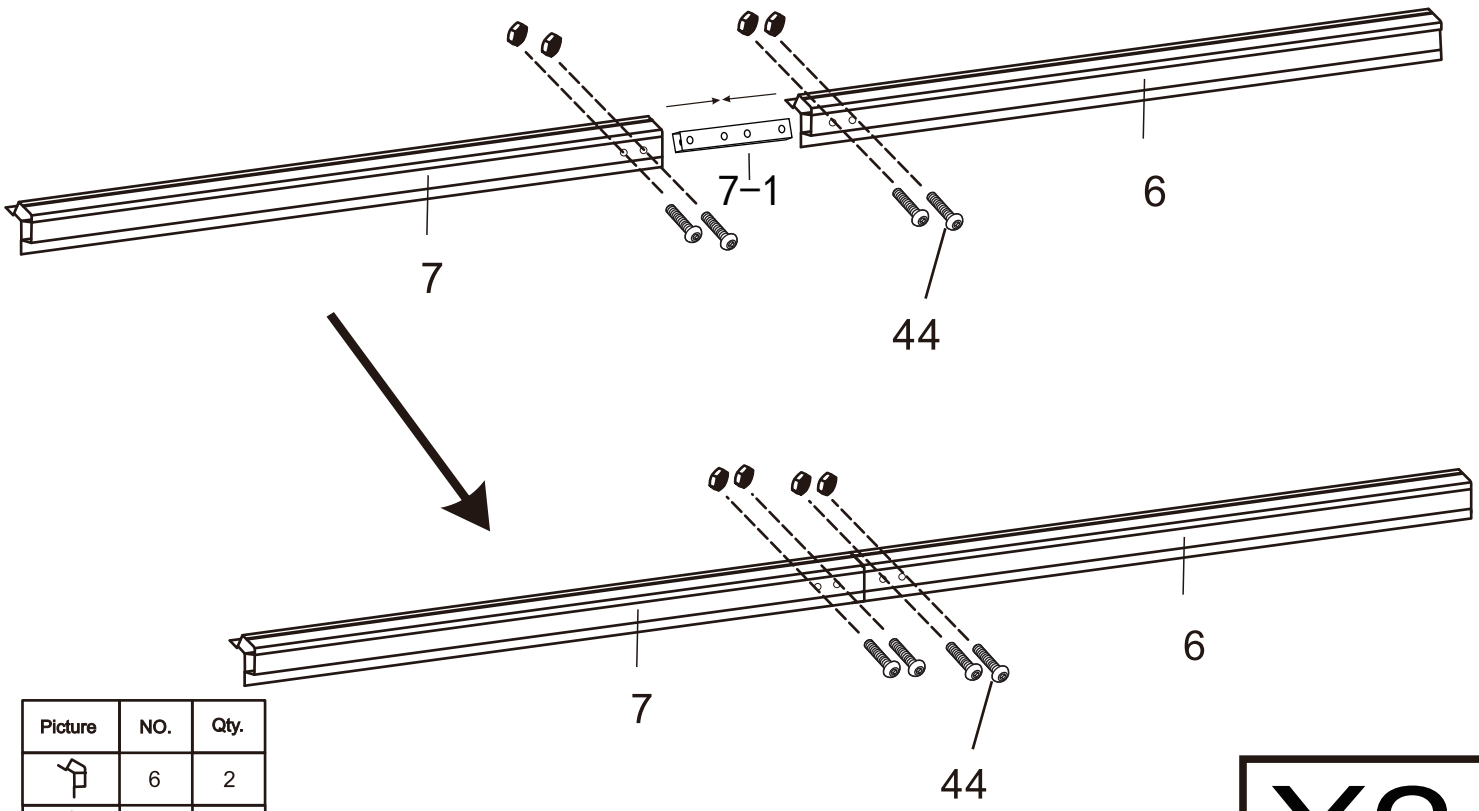

Picture	NO.	Qty.
	6	2
	7	2
	7-1	2
	44	8

X2

Step5-2: Pre-Assembled Side Roof Ridge Installation

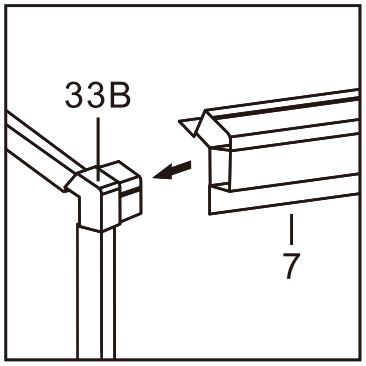

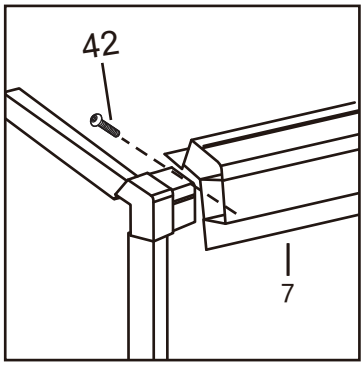

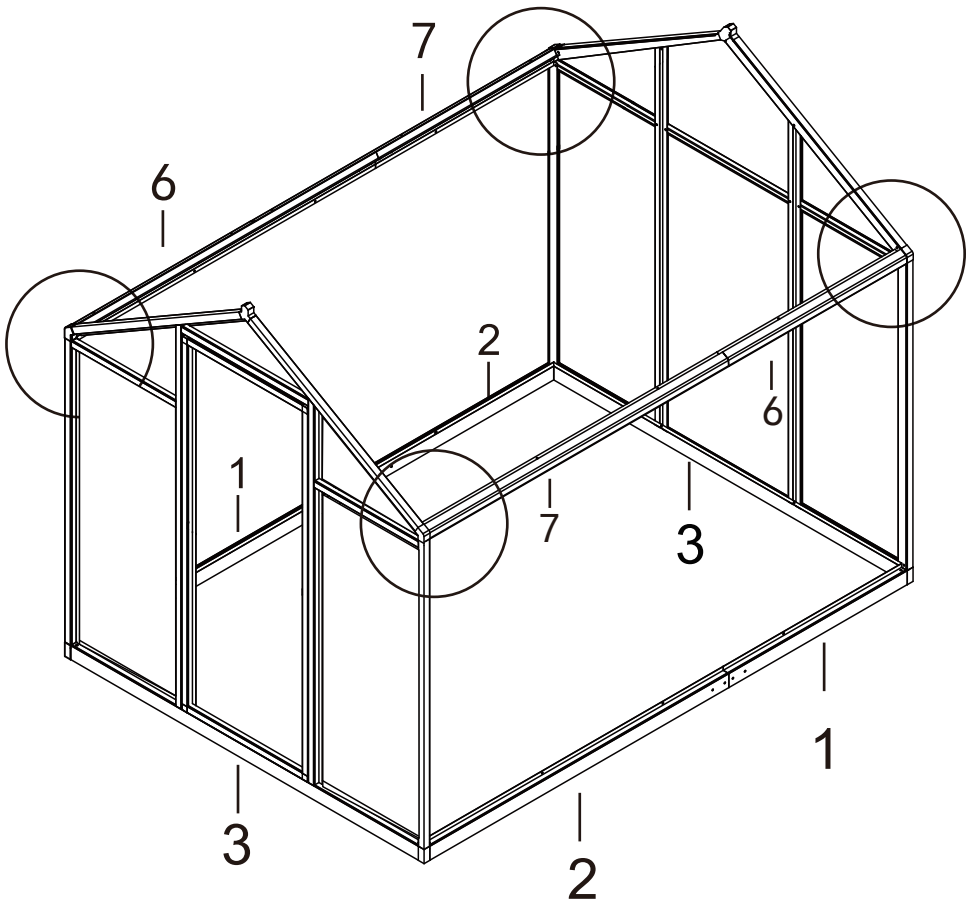

Picture	NO.	Qty.
	42	4

Step6-1: Middle Roof Ridge Assembly

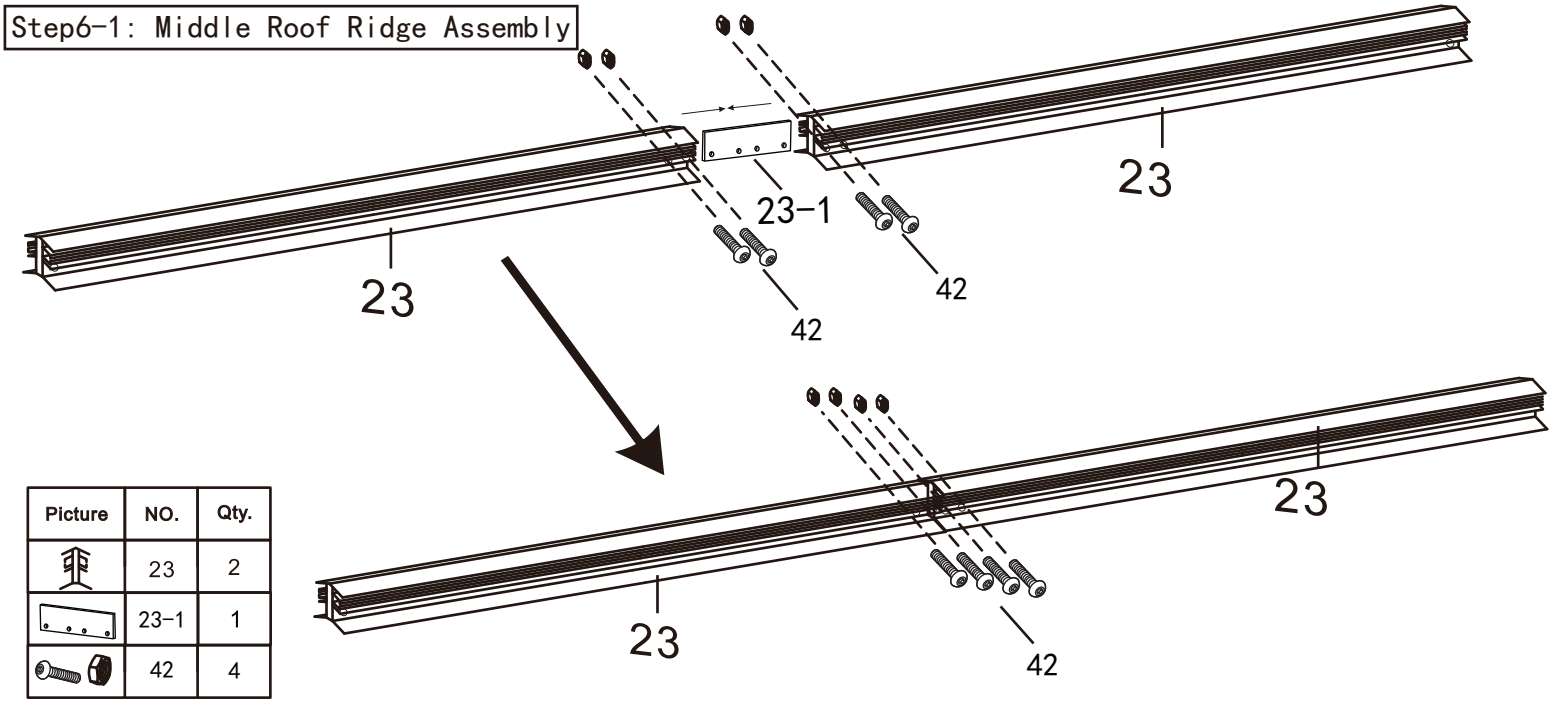

Picture	NO.	Qty.
	23	2
	23-1	1
	42	4

Step6-2: Window assembly

Picture	NO.	Qty.
	30-1	1
	30-2	2
	30-3	1

Drill 4 holes in the L with a suitable drill

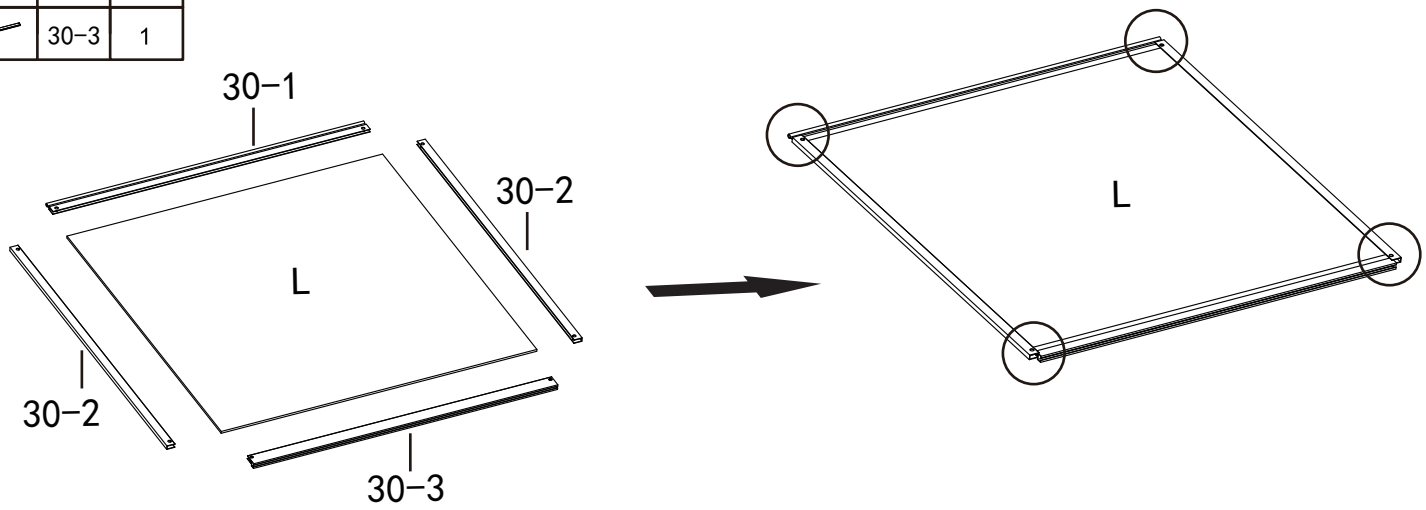

Picture	NO.	Qty
	48	4

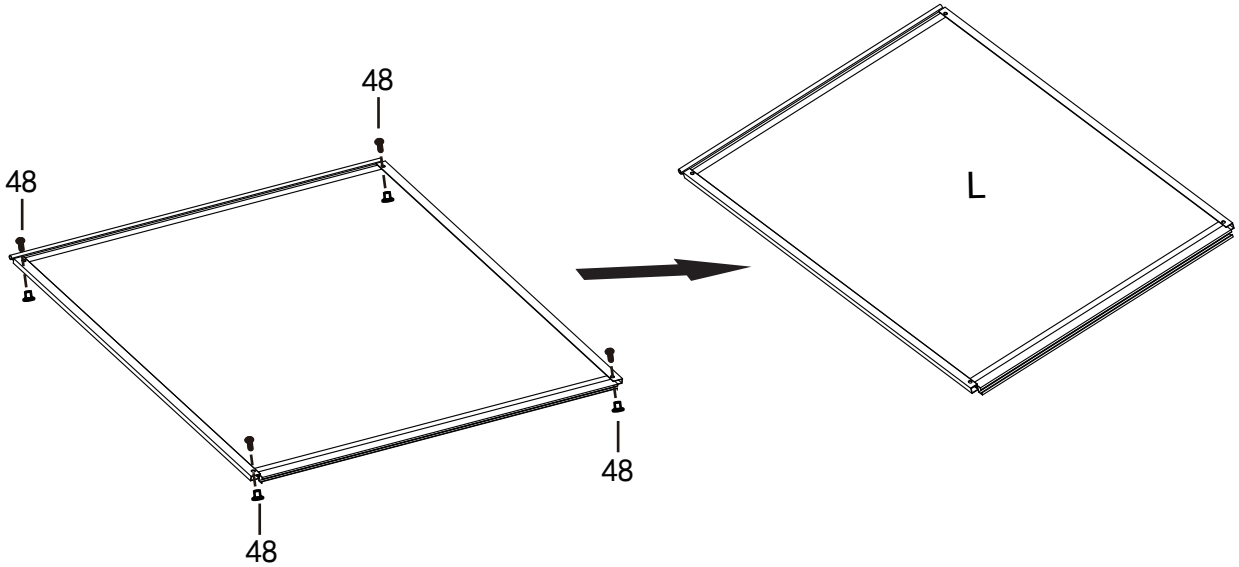

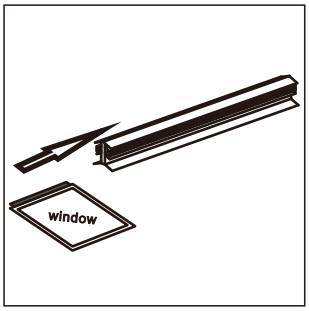

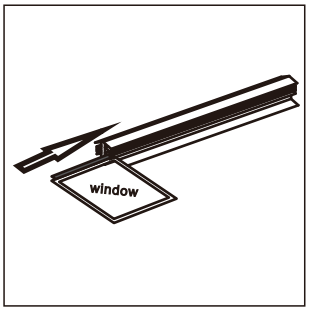

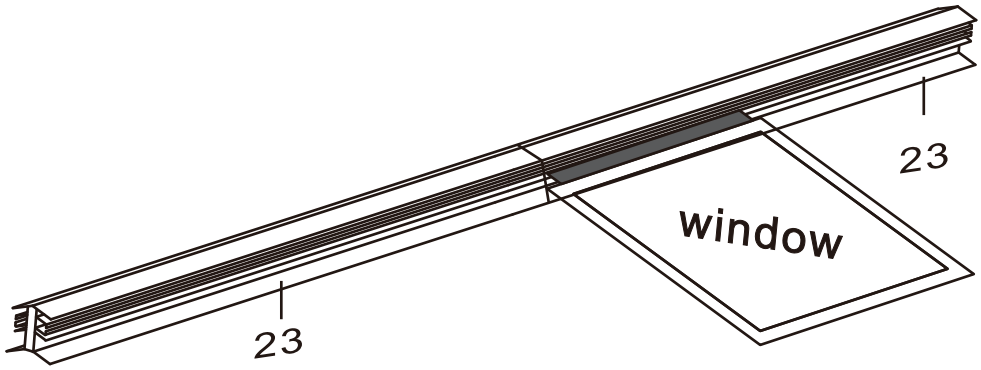

Step6-3: Pre-Assembled Middle Roof Ridge Installation & Window Assembly

Note: Windows must be slid into the Gutter
of Frame 23 before assemble Frame 23.

Picture	NO.	Qty.
	42	2

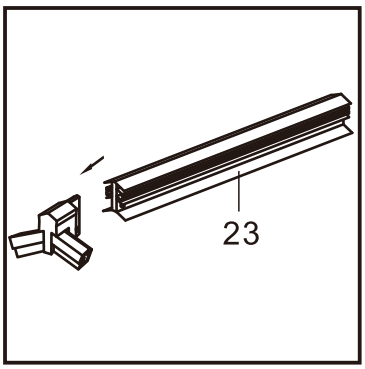

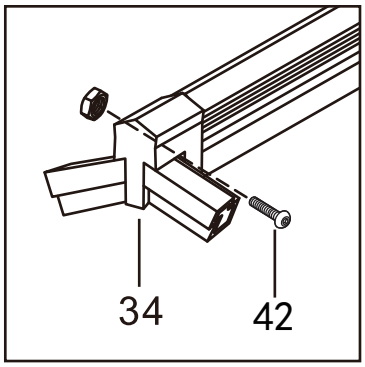

Step7-1: Side Wall Assembly

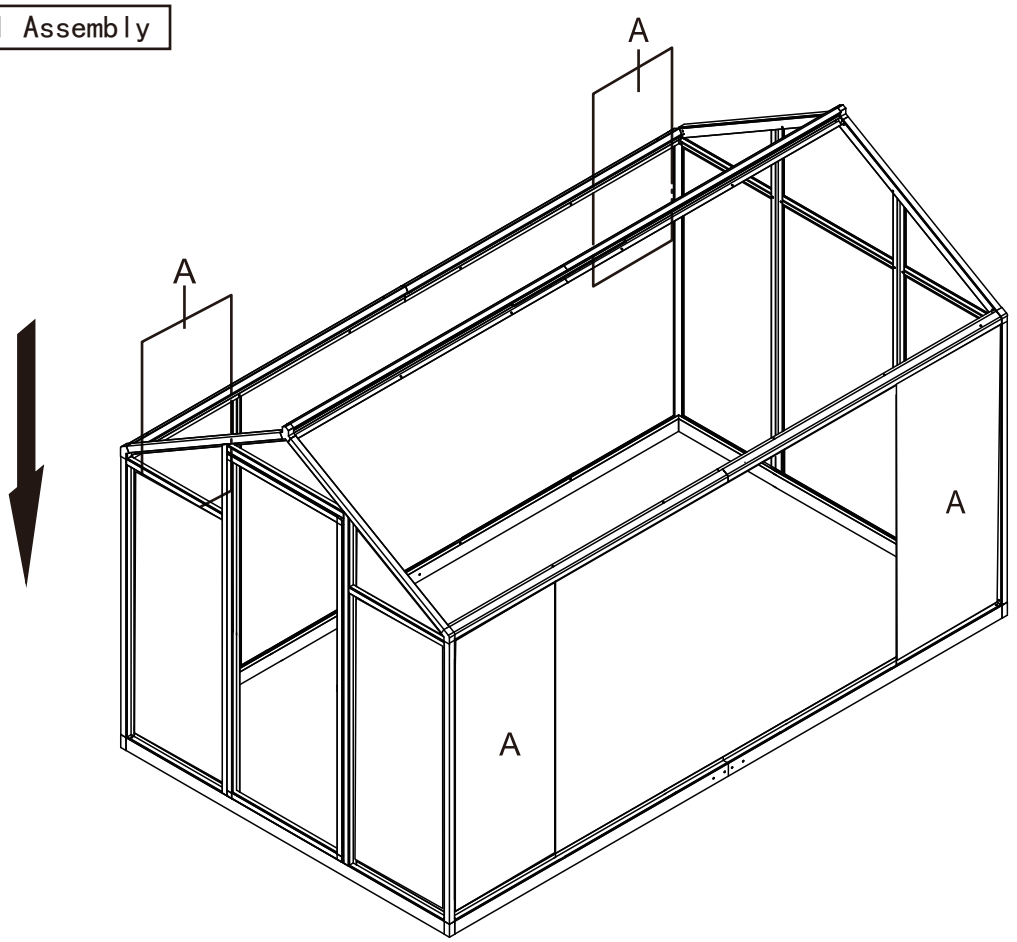

Picture	NO.	Qty.
	A	4

Step7-2: Side Wall Frame Assembly

Please do not make the screws completely tight when fixing them, tighten them completely after the PC board is completely installed

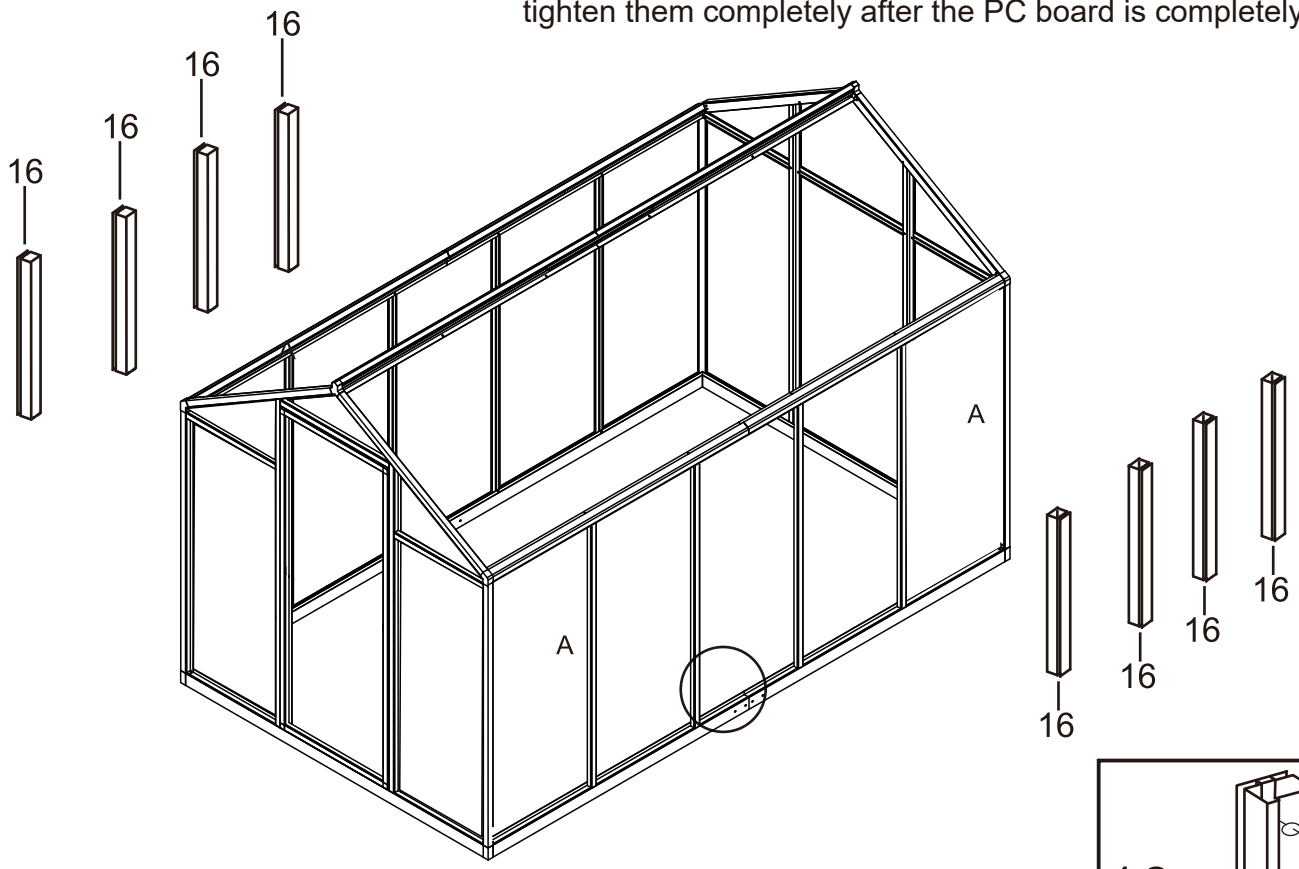

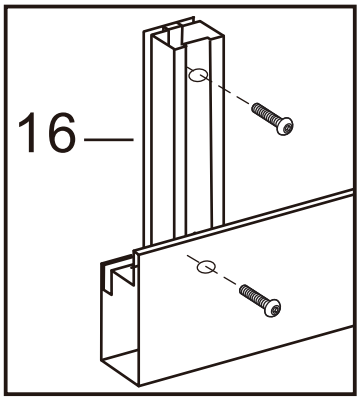

Picture	NO.	Qty.
	16	8
	42	16

Step7-3: Side Wall Assembly

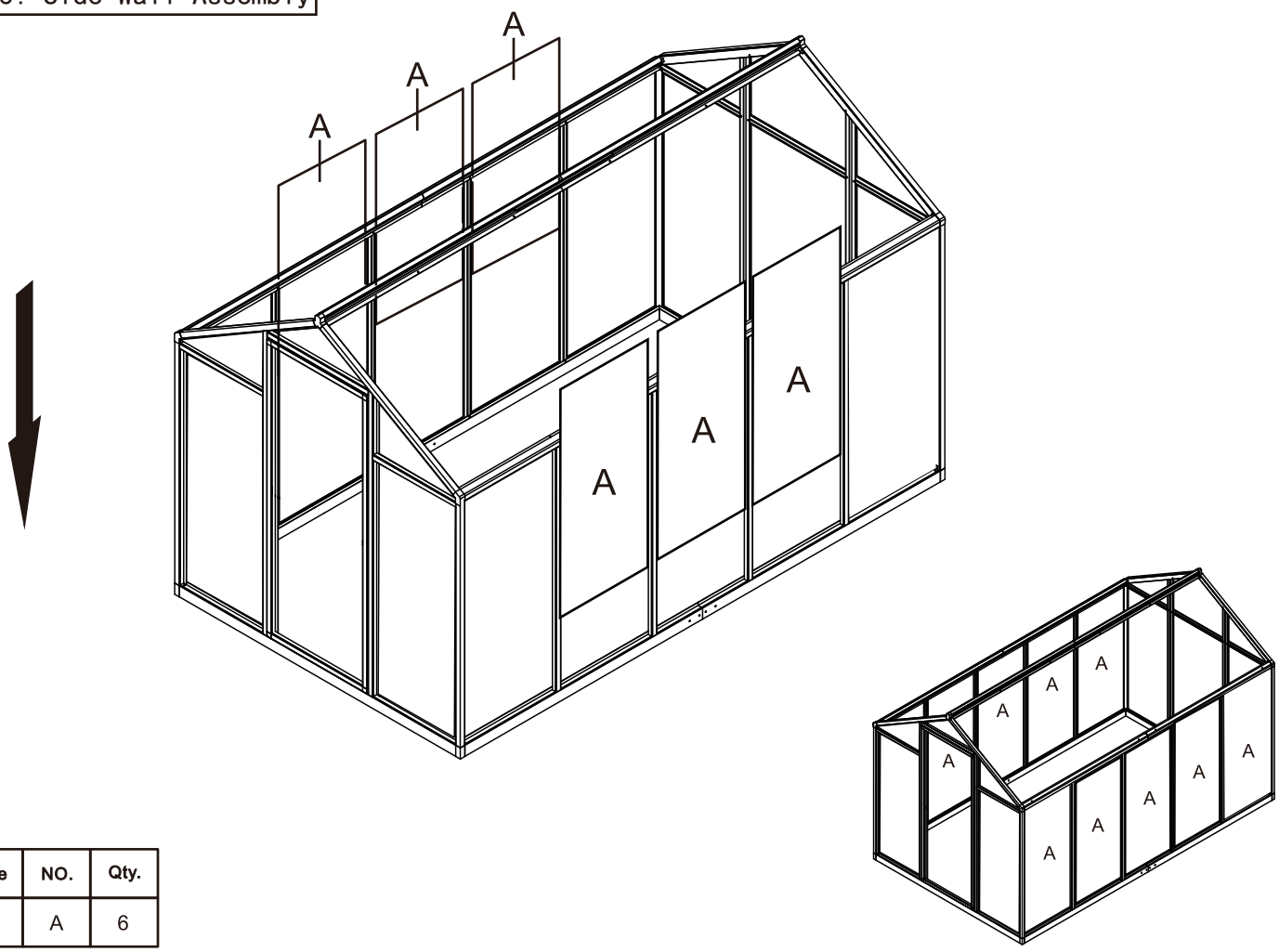

Picture	NO.	Qty.
	A	6

Step8-1: Roof Wall Assembly

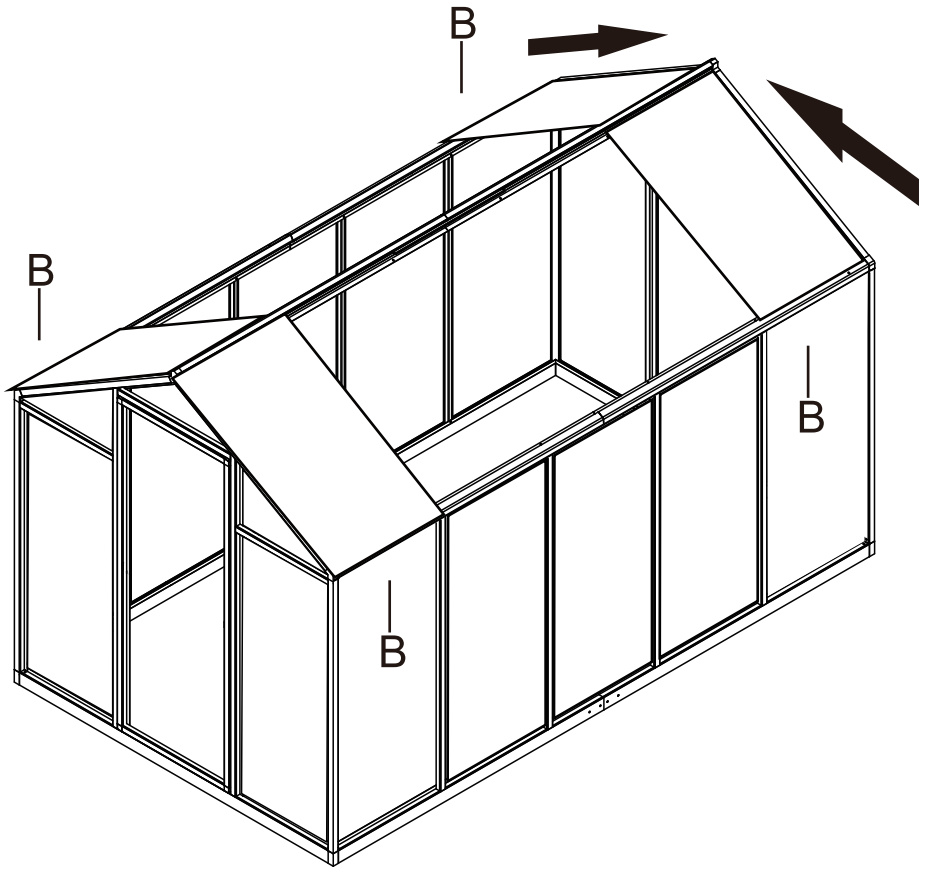

Picture	NO.	Qty.
	B	4

Step8-2: Roof Wall Frame Assembly

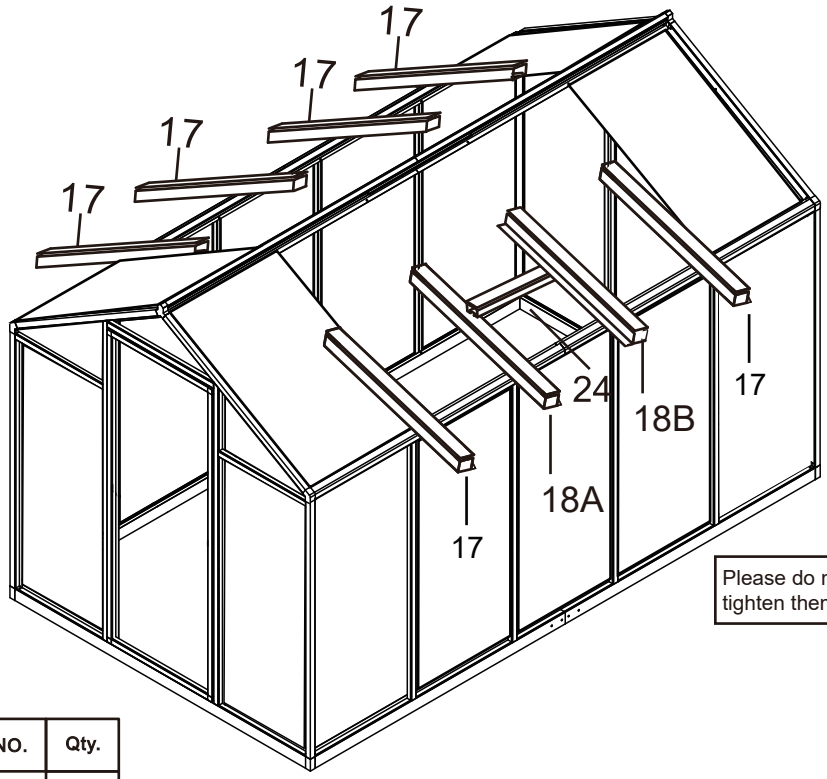

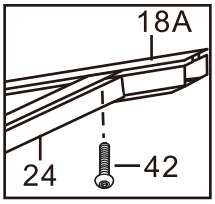

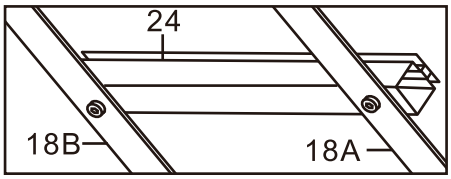

Please do not make the screws completely tight when fixing them, tighten them completely after the PC board is completely installed

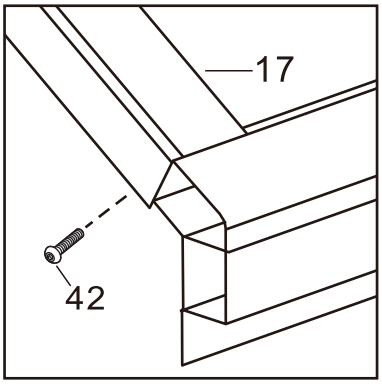

Picture	NO.	Qty.
	17	6
	18A	1
	18B	1
	24	1
	42	18

Step8-3: Roof Wall Assembly

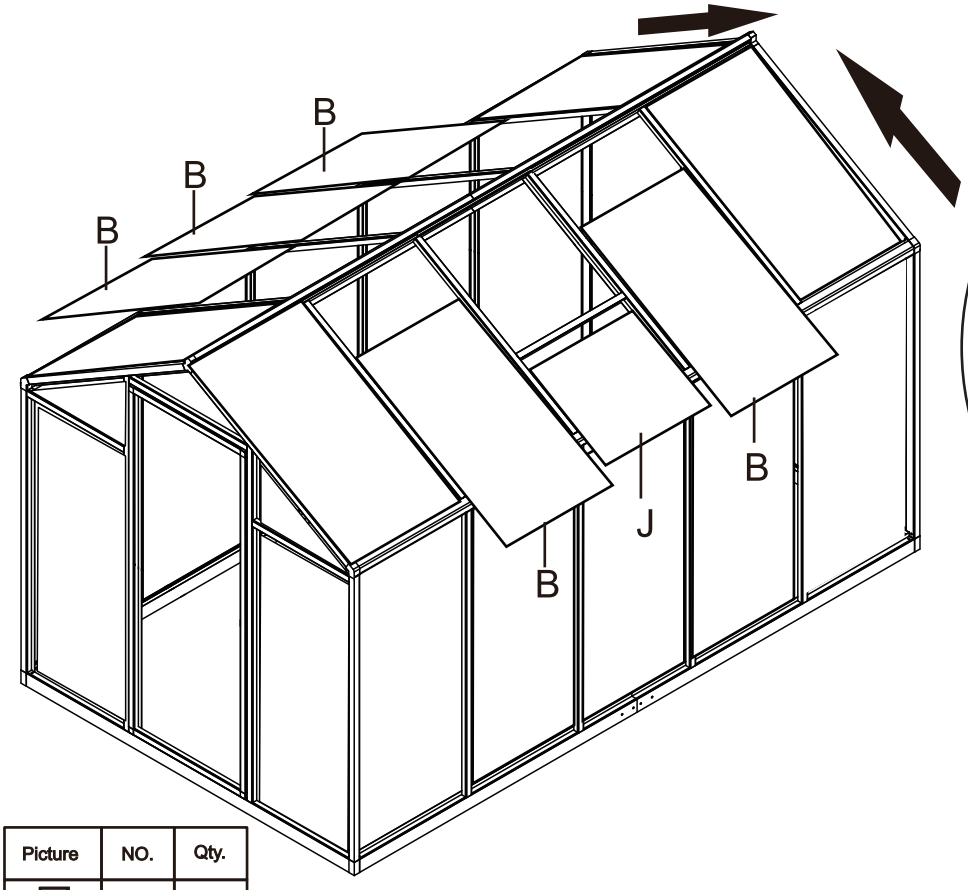

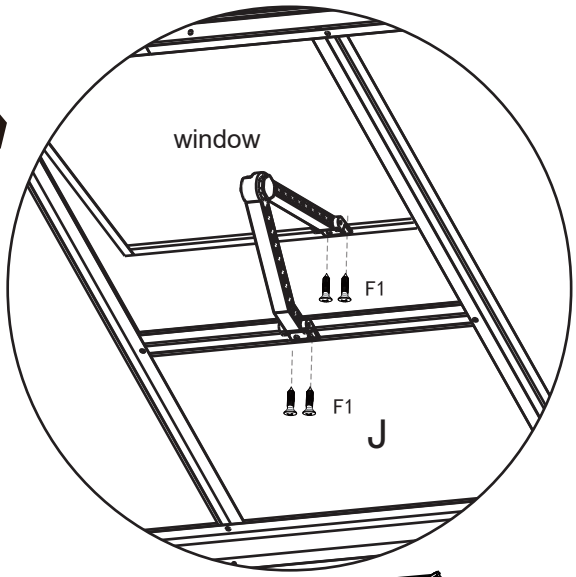

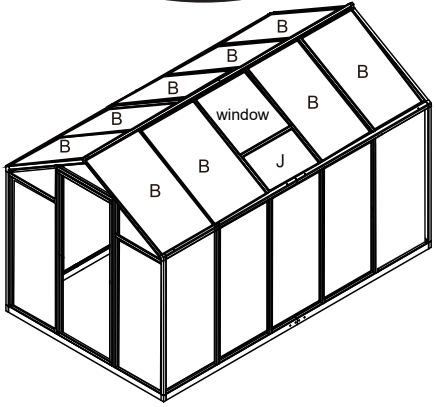

Picture	NO.	Qty.
	B	5
	J	1
	F1	4

Step9: Door Assembly

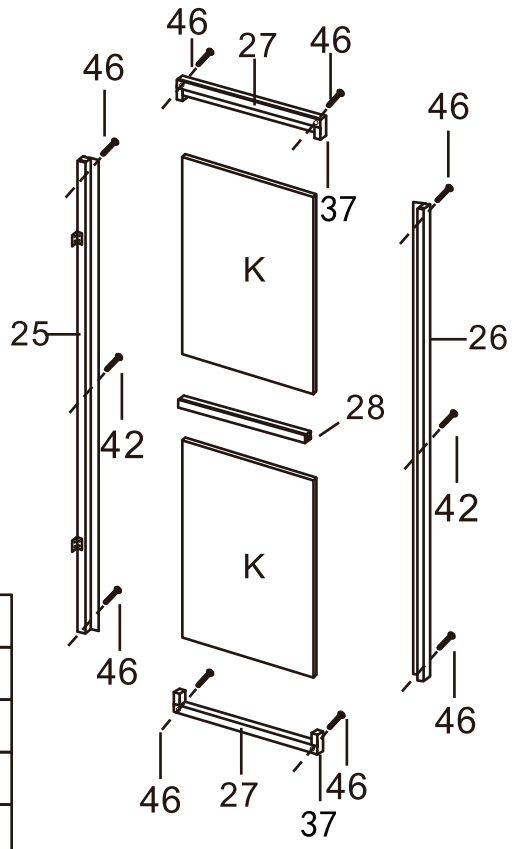

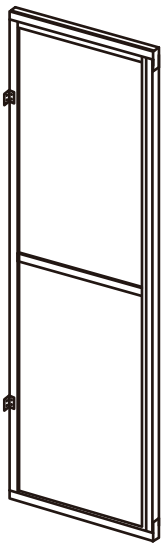



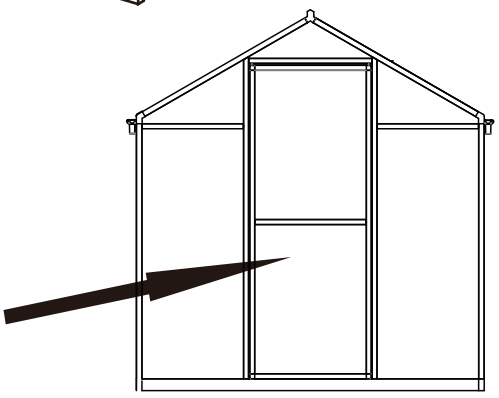

Picture	NO.	Qty.
	25	1
	26	1
	27	2
	28	1
	K	2
	42	2
	46	8
	37	4

Step10: Door Assembly

Picture	NO.	Qty.
	31	1
	31A	1
	47	4

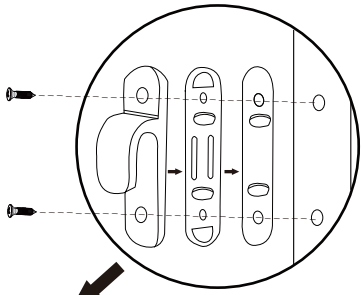

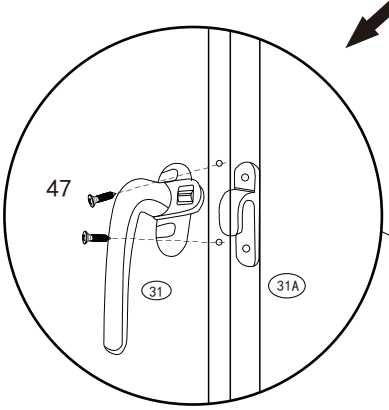

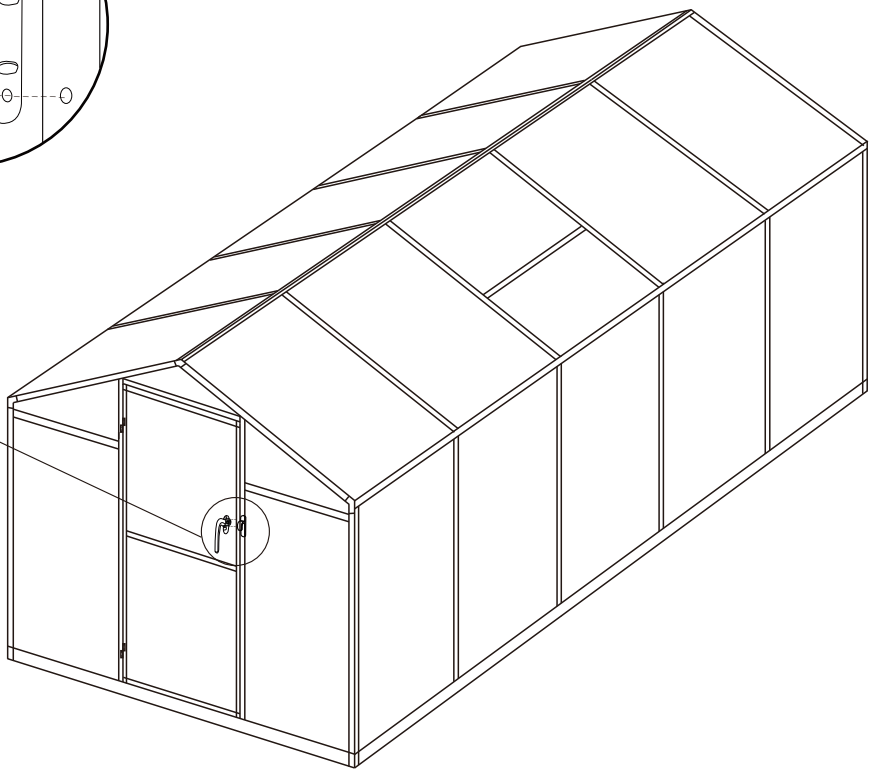

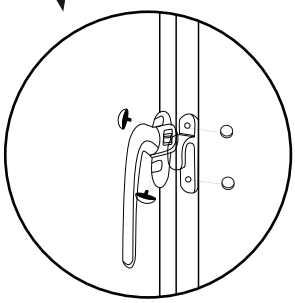

Note: The door handles(31and31A) are supposed to be secured with self-tapping screws(47) (no drilling required).

Check and tighten all screws to ensure that the greenhouse is sturdy.

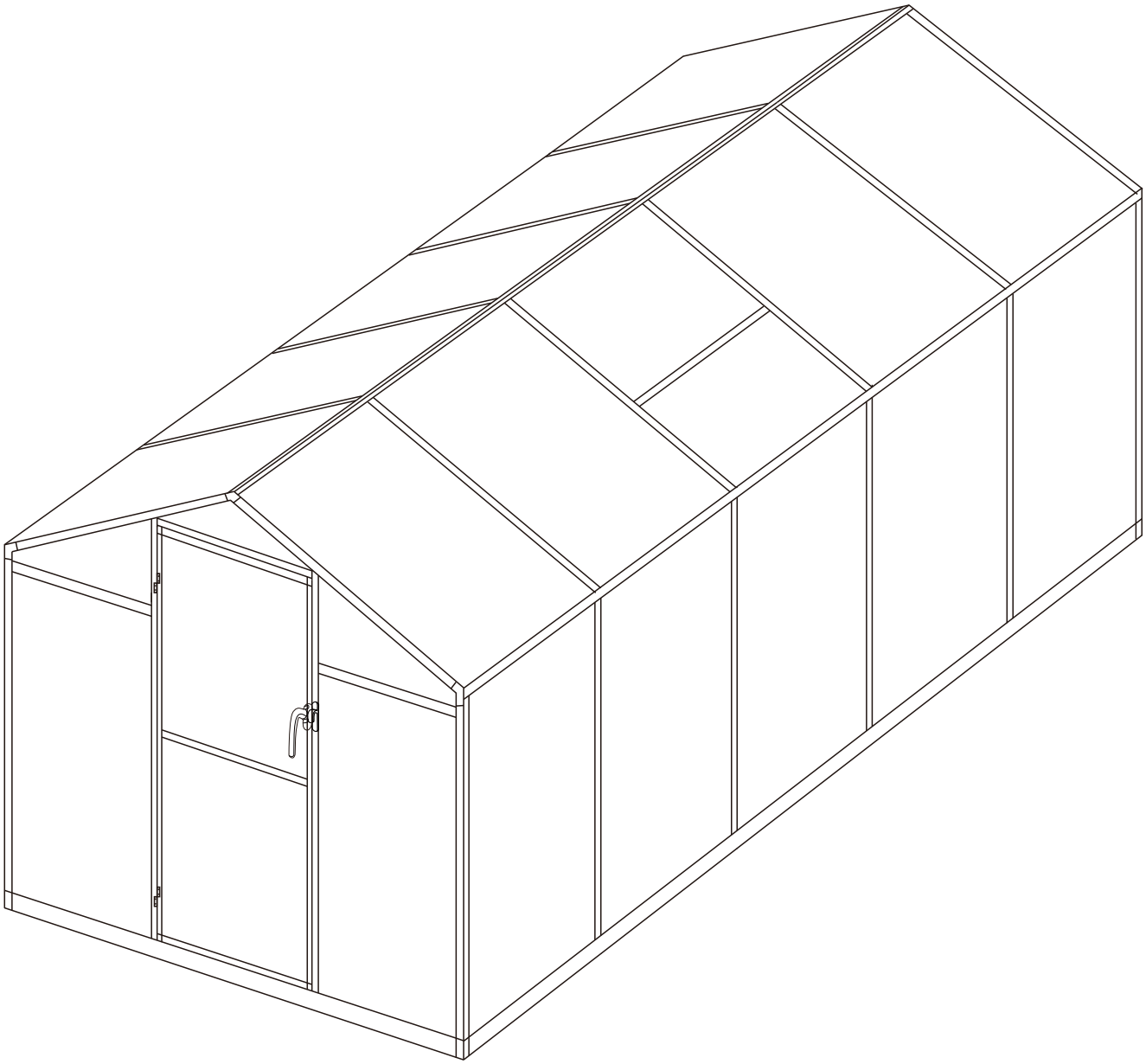

For better shopping experience
Please visit our website
WWW.VEIKOUS.COM
VEIKOUS