WX051
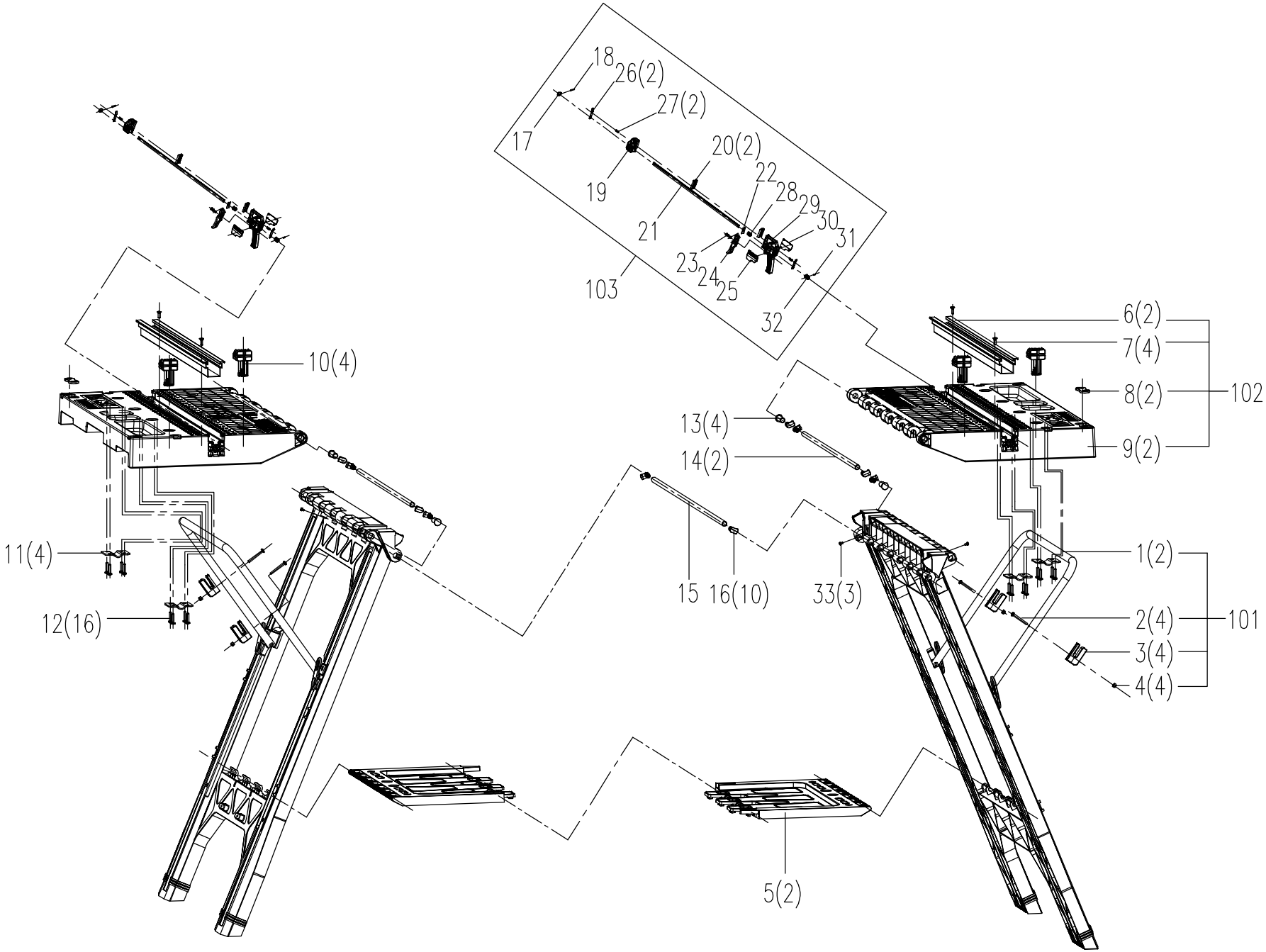
Version:00
Date:160613