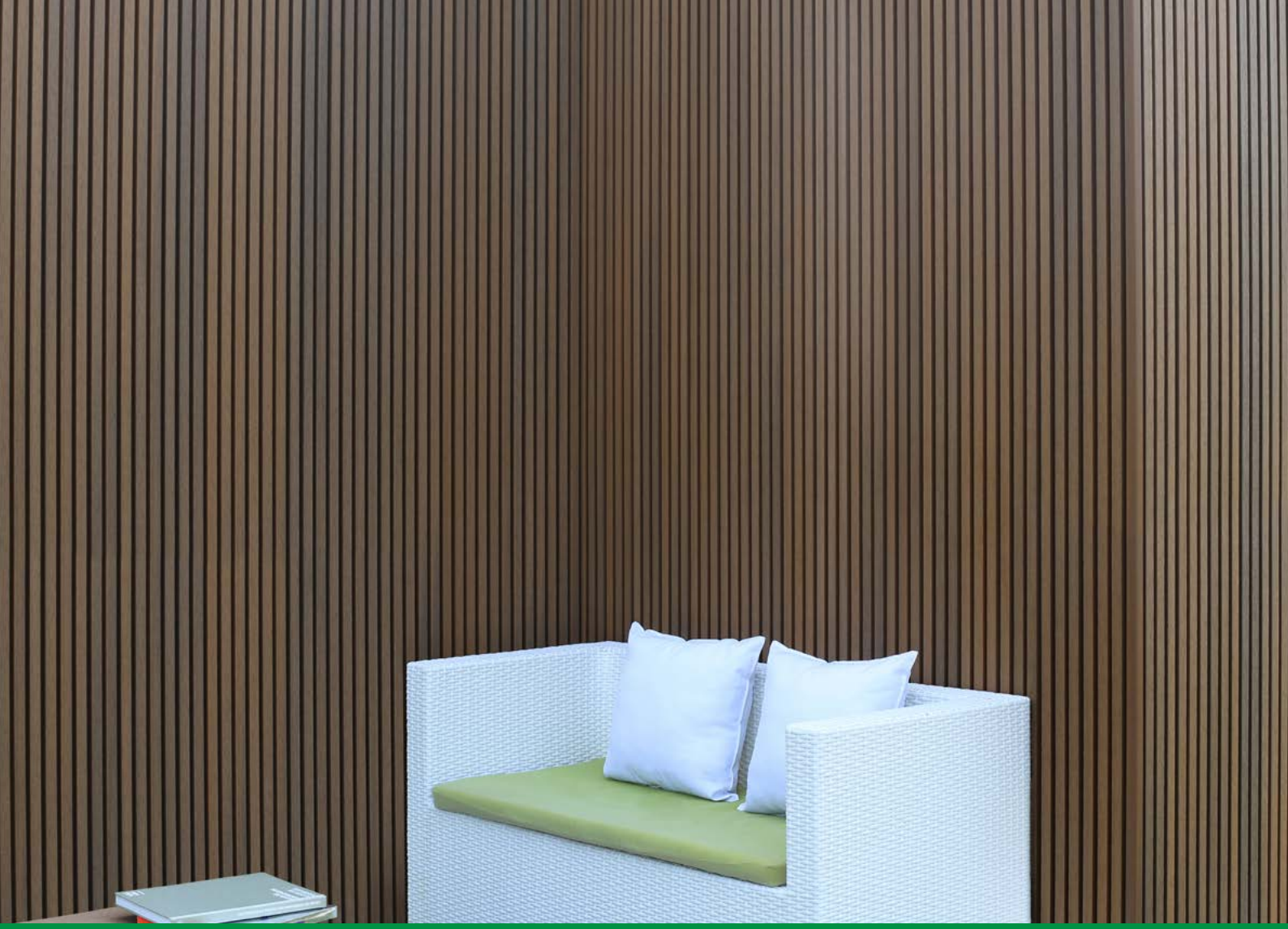

European Siding System Horizontal Installation Guide

v20210324US

NewTechWood®

CONTENTS

Important Note	3 - 5
European Siding Parts	6 - 9
Under Construction	10
Furring Strips Installation	11
Expansion and Contraction Values Table	12
Locking the Siding Board	13 - 15

European Siding System Horizontal Installation

-Framing	16 - 18
-Trim Installation	18 - 20
-Siding Board Installation	20 - 26
-Finish the Top	27

NOTE: Click on the heading to enter the section directly

IMPORTANT Note:

Read All Sections Before You Start

For the most up to date information, please visit our website @ www.newtechwood.com

Prior to installing any composite siding system, it is recommended that you check with local building codes for any special requirements or restrictions. The diagrams and instructions outlined in this guide are for illustration purposes only and are not meant or implied to replace a licensed professional. Any construction or use of NewTechWood must be in accordance with all local zoning and/or building codes. The consumer assumes all risks and liability associated with the construction and use of this product.

Safety

When dealing with any type of construction project, it is necessary to wear appropriate safety equipment to avoid any risk of injuries. NewTechWood recommends, but is not limited to the following safety equipment, when handling, cutting, and installing NewTechWood: gloves, a respiratory protection, long sleeves, pants, and safety glasses.

Tools

Standard woodworking tools may be used. It is recommended that all blades have a carbide tip. Standard stainless steel or acceptable coated deck screws and nails are recommended.

Environment

A clean, smooth, flat, and strong surface is needed to install NewTechWood's products correctly. Please check with local building codes before ever installing any type of siding. If installation does not occur immediately, NewTechWood's products need to be put on a flat surface at all times. It should NEVER be put on a surface that is NOT flat.

Planning

Plan a layout for your siding before starting it to ensure the best possible looking siding for your project. Building codes and zoning ordinances generally apply to permanent structures, meaning anything that is anchored to the ground or attached to the house. So nearly every kind of siding requires permits and inspections from a local building department. We recommend drawing out a site plan of your proposed project that you intend to do to minimize errors and make your perfect Siding.

Pressure wash on a scrap piece of material before using a pressure washer on the profiles to make sure that your settings will not damage the Ultrashield coating.

Construction

NewTechWood UltraShield is NOT intended for use as columns, support posts, beams, joist stringers, support against a force, or other primary load-bearing members. NewTechWood must be supported by a code-compliant substructure. While NewTechWood products are great for retrofits, NewTechWood's products CANNOT be installed on existing siding boards.

Static

Static can also be more prevalent in areas that are of higher altitude because the humidity is lower. For these areas, be careful of using conducive objects such as metal railing and chairs as static shocks might occur more often. A potential way to lower the amount of static shocks occurring is to apply Staticide (www.aclstaticide.com) on your deck or use anti-static mats before doorways.

Ventilation

NewTechWood products CANNOT be directly installed onto a flat surface. It must be installed onto a substructure, so there is adequate and unobstructed air flow under the cladding to prevent excessive water absorption. A minimum of 1" (25mm) of continuous net free area under the siding surface is required for adequate ventilation on all siding, so air can circulate between adjacent members to promote drainage and drying.

Heat and Fire

Excessive heat on the surface of NewTechWood products from external sources such as but not limited to fire or reflection of sunlight from energy efficient window products. Low-emissivity (Low-E) glass can potentially harm NewTechWood products. Low-E glass is designed to prevent passive heat gain within a structure and can cause unusual heat build-up on exterior surfaces. This extreme elevation of surface temperatures, which exceeds that of normal exposure, can possibly cause NewTechWood products to melt, sag, warp, discolor, increase expansion/contraction, and accelerate weathering.

Current or potential NewTechWood customers that have concerns about possible damage by Low-E glass should contact the manufacturer of the product, which contains Low-E glass for a solution to reduce or eliminate the effects of reflected sunlight.

Fasteners

When fastening NewTechWood's products all screws that are face fastened should always be driven in at a 90 degree angle to the siding surface. Toe nailing/screwing should never be done to the products. An extra furring strip should be added if a 90 degree angle cannot be driven into the board. All fasteners should be on their own independent furring strips, when two boards ends meet each other there must be a sister furring strip. The end of each board must sit on its own furring strip.

Use white chalk, straight boards, or string lines as templates for straight lines. NEVER USE COLORED CHALK. Colored chalk will permanently stain NewTechWood's products and are highly not recommended.

All nails/screws that are face fixed should always be stainless steel. Depending on the screws that you use when face fixing, there could be potential bulging or mushrooming. It is recommended to take care of these mushrooms/bulges by taking a rubber mallet and patting them down to give your siding a better look.

When choosing which screws/nails to use, always check first with your local home centers and hardware stores to see if they have screws that are engineered specifically for composite wood. These screws/nails will always work and give NewTechWood's products the best looking outcome, using other screws/nails that are not recommended for composite could potentially damage/harm the cladding. If you are unsure which screw/nail to use, contact your manufacturer for more information.

Predrill

It is recommended to use the #8 pan head screw for face fixing the profiles and the trims onto the furring strips.
When face fixing, it is recommended to predrill the holes slightly larger on the profiles and the trims to allow for expansion and contraction response to temperature change, as shown in below diagram,

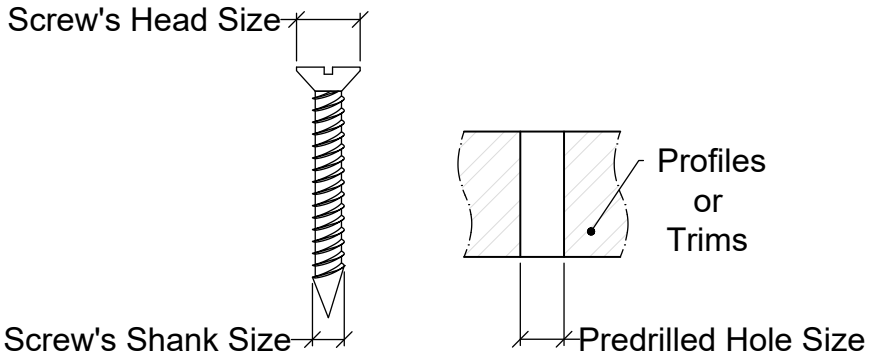

The predrilled hole size should be larger than the screw thread size, from 1/16” (1.5 mm) to 5 /64” (2 mm). Moreover, the predrilled hole size should also be smaller than the screw head size, at least 5/64” (2 mm). A washer can be applied if the predrilled hole size is smaller than the screw head size below 5/64" (2 mm).

European Siding Parts

Product	Purpose	Part
AW-02	Used for the installation of the first board	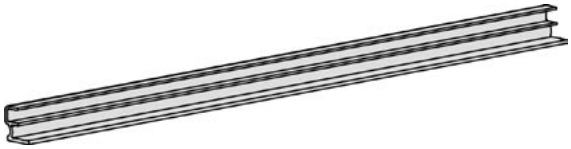
AW-08	Used at every joist to fix each board to the furring strip	
T-7	Used on the supporting for the last board	
UH46	European Siding Board	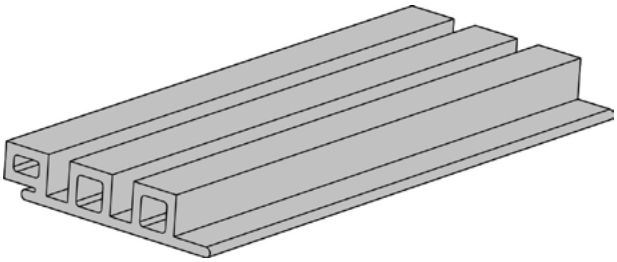
UH50	F-Trim, used for the UH46 installation on the outermost edge	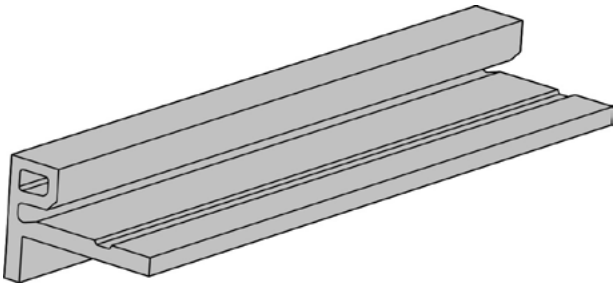
UH51	Outside Corner Trim, used for the UH46 installation on the outside corners	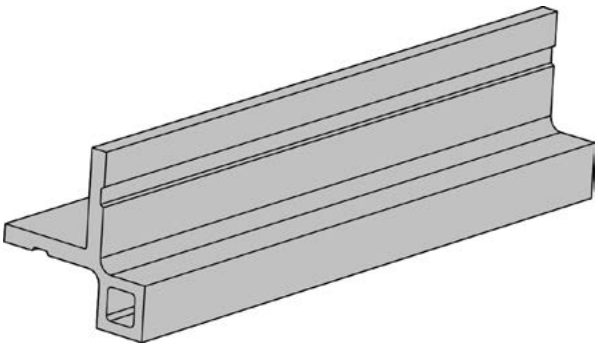

European Siding Parts

Product	Purpose	Part
UH58	European Siding Board	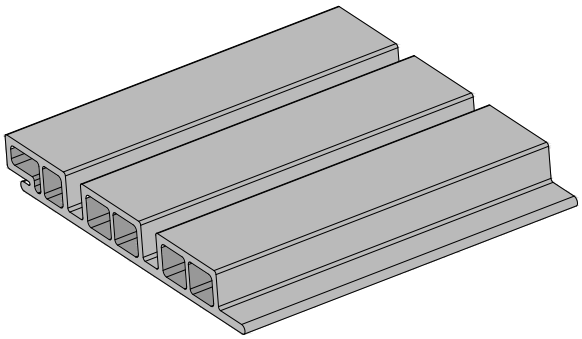
UH59	F-Trim, used for the UH58 installation on the outermost edge	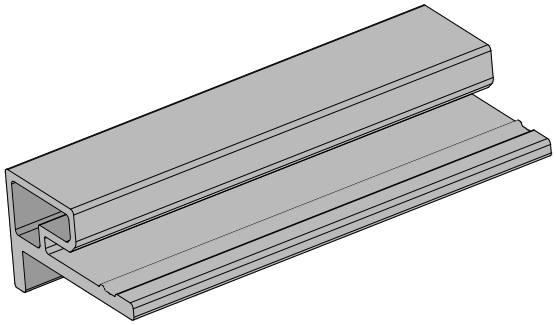
UH60	Outside Corner Trim, used for the UH58 installation on the outside corners	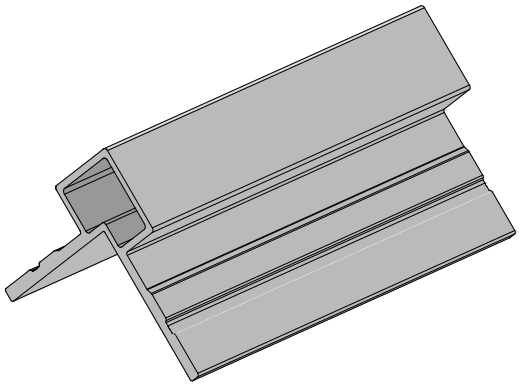

European Siding Screws (For Wood Furring Strip)

The table below shows the screws recommended to use for the installation, but not included.

Product	Purpose	Part
#5 x 1 1/4" Stainless Steel SS304	Used when locking the board into the Clip (AW08)	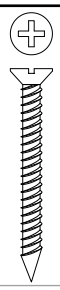
#8 x 3" Stainless Steel SS304 **depends on the thickness of your joists	Used when installing the furring strips onto the wall	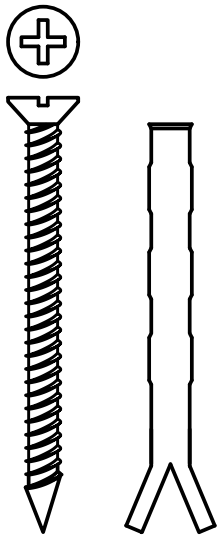
#8 x 1" Stainless Steel SS304 (Pan Head)	Used when installing the Clip (AW08) and the Rubber Stopper (T-7) onto the wood furring strips	
#8 x 1 1/4" Stainless Steel SS304 (Flat Head)	Used when face fixing the boards and the trims onto the wood furring strips	

European Siding Screws (For Aluminum Furring Strip)

The table below shows the screws recommended to use for the installation, but not included.

Product	Purpose	Part
#5 x 1 1/4" Stainless Steel SS304	Used when locking the board into the Clip (AW08)	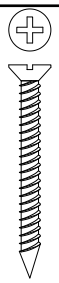
#8 x 3" Stainless Steel SS304 **depends on the thickness of your joists	Used when installing the furring strips onto the wall	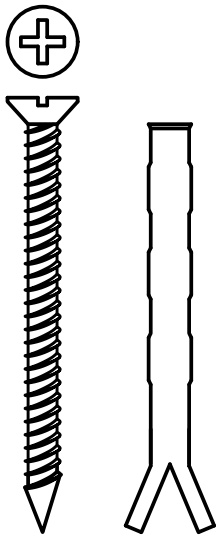
#8 x 1" Stainless Steel SS410 (Pan Head)	Used when installing the Clip (AW08) and the Rubber Stopper (T-7) onto the aluminum furring strips	
#8 x 1 1/4" Stainless Steel SS410 (Flat Head)	Use when face fixing the boards and the trims onto the aluminum furring strips	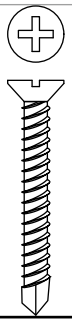

*Note: All screws are based on our recommendation and if the installation requires something different than what is shown, a professional should be consulted before installing.

The following installation guide will use the above screw sizes.

Under Construction

We recommend for the under construction aluminum or pressure treated wood furring stripss. Each cladding board needs to be supported by a furring strip NO MORE than 16" (406mm) from center to center. Extra care is required in order to provide sufficient joisting in and around obstacles such as windows, fascia's, soffits, guttering, ventilation points etc. Below is an example of the layers that would occur in a typical installation, but a licensed professional should always be consulted prior to any installation.

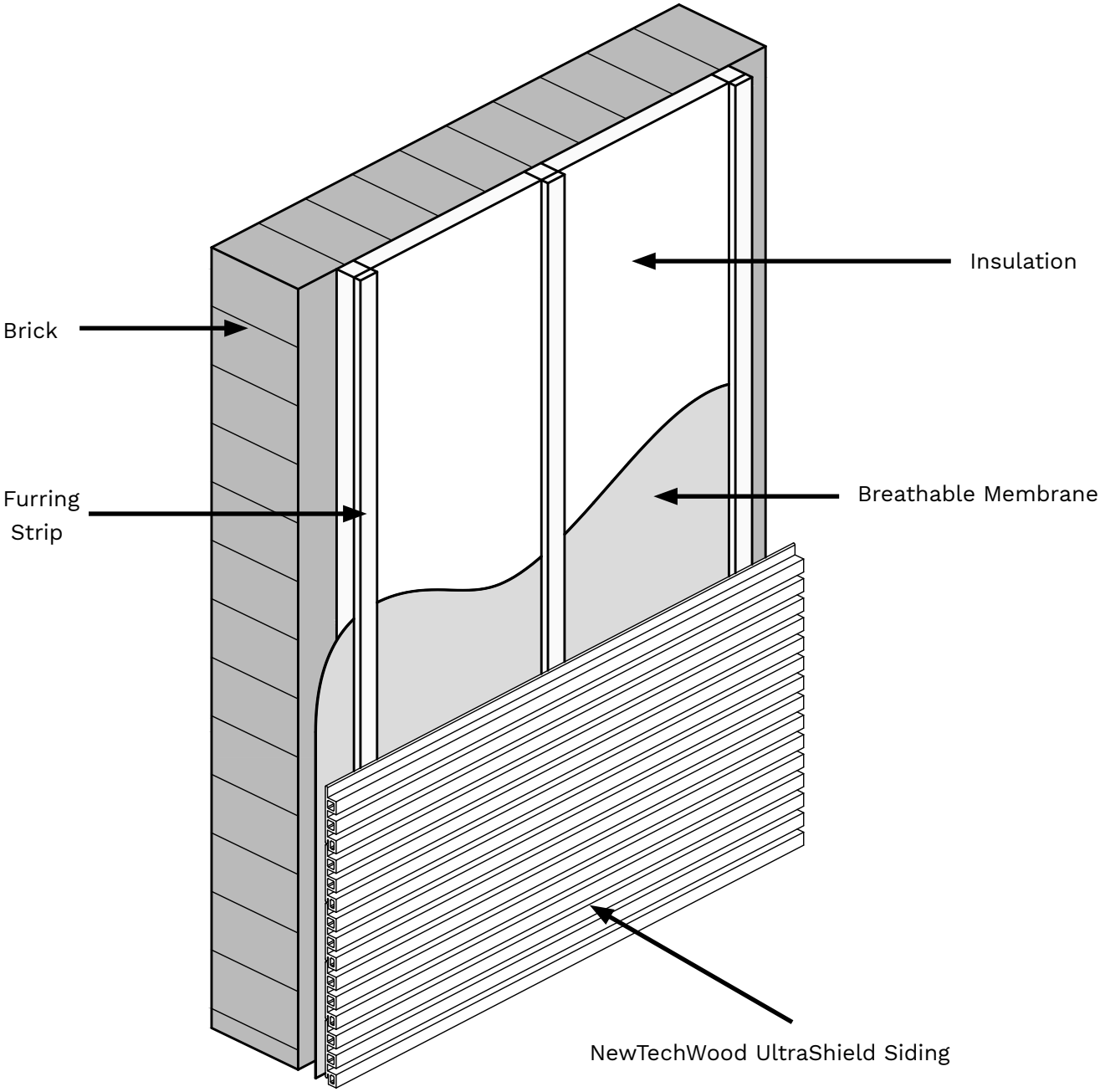

Furring Strips Installation

A building professional should be consulted regarding vapor barriers and insulation for your project. Where a vapor barrier is to be used, it should be a breathable type and must be positioned behind the furring strips. The furring strip needs to have a minimum thickness of 1" (25mm).

Wood furring strips should be fixed into position at a maximum of 16" (406mm) centers using a suitable A4 Stainless Steel Countersunk Wood/Masonry screw. All furring strips need to be flat and leveled against the wall surface use shims if necessary.

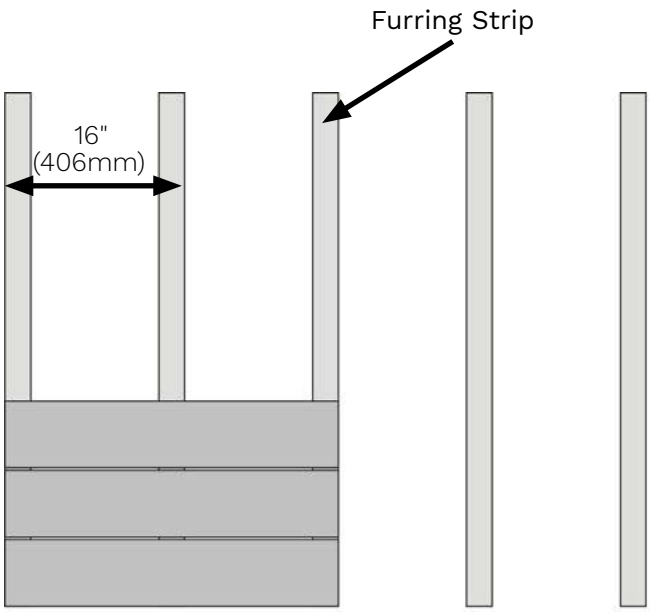

Horizontal Installation

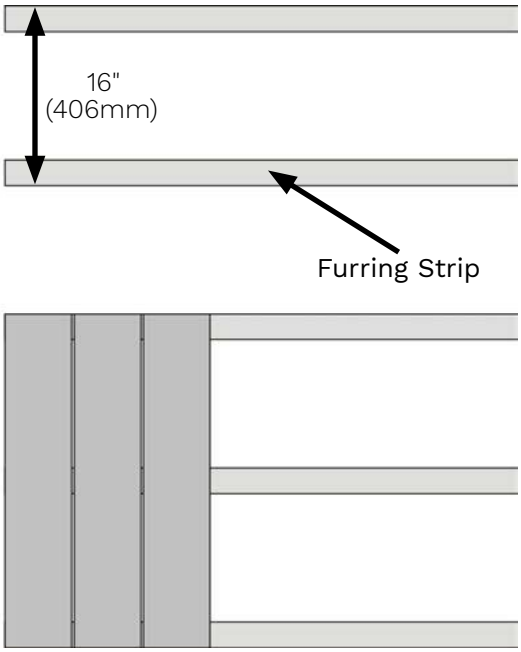

Vertical Installation

Expansion and Contraction Values

NewTechWood siding boards will experience expansion and contraction with changes in temperature. Expansion and contraction are most significant where extreme temperature changes occur. Fastening the deck planks according to the gapping requirements noted in the following table accommodates for this movement.

Expansion and Contraction table of values for North America, Canada, Australia and Asia

Length (Feet)

Installation Temperature (Farhenheit)	3	8	9	10	12	13	16	18	
32	1/16	2/16	2/16	3/16	3/16	4/16	4/16	5/16	Gap (in)
41	1/16	2/16	2/16	2/16	3/16	3/16	4/16	4/16	
50	1/16	2/16	2/16	2/16	2/16	3/16	3/16	3/16	
59	1/16	1/16	1/16	2/16	2/16	2/16	2/16	3/16	
68	3/64	1/16	1/16	1/16	1/16	2/16	2/16	2/16	
77	3/64	1/16	1/16	1/16	1/16	1/16	1/16	1/16	
86	3/64	3/64	3/64	3/64	3/64	1/16	1/16	1/16	

Note: If you are still unsure of what gapping to use, contact the manufacturer and they will give you the correct gapping requirements based on your environment and area.

Locking the Siding Board

Since the composite wood must allow for expansion and contraction due to temperature change, the board must be locked at one fixed point but only one point to allow the remaining board to expand and contract freely. In the case there is a need to lock the board, Clip (AW08) comes with a separate hole.

It is important that DO NOT LOCK any other clips for the same board.

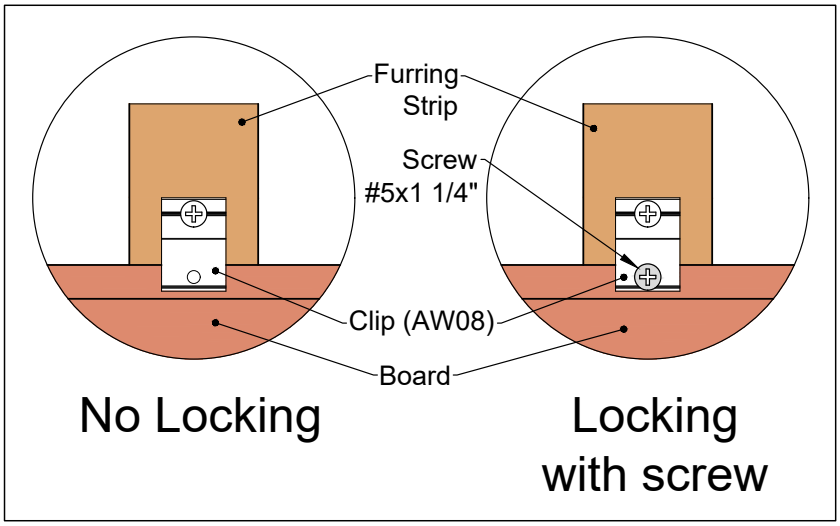

- Horizontal Installation - Aluminum Furring Strips

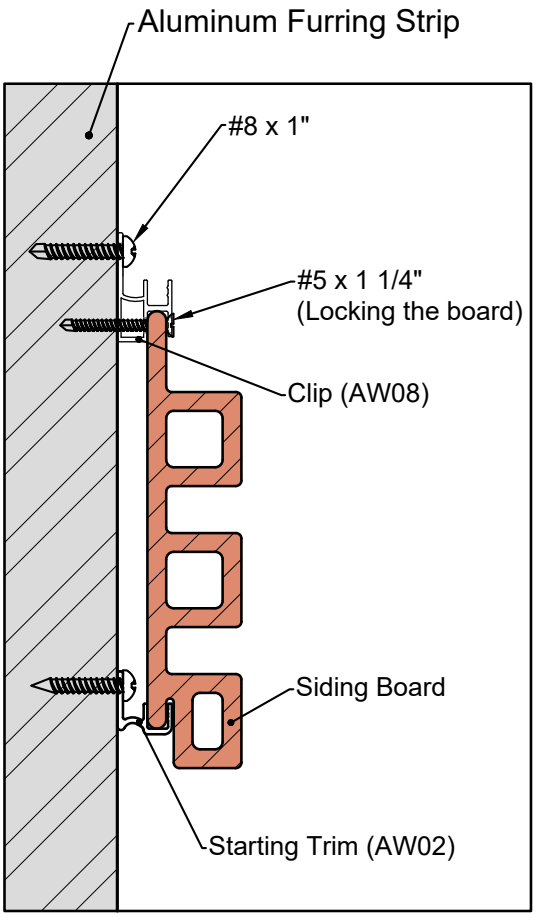

- Horizontal Installation - Wood Furring Strips

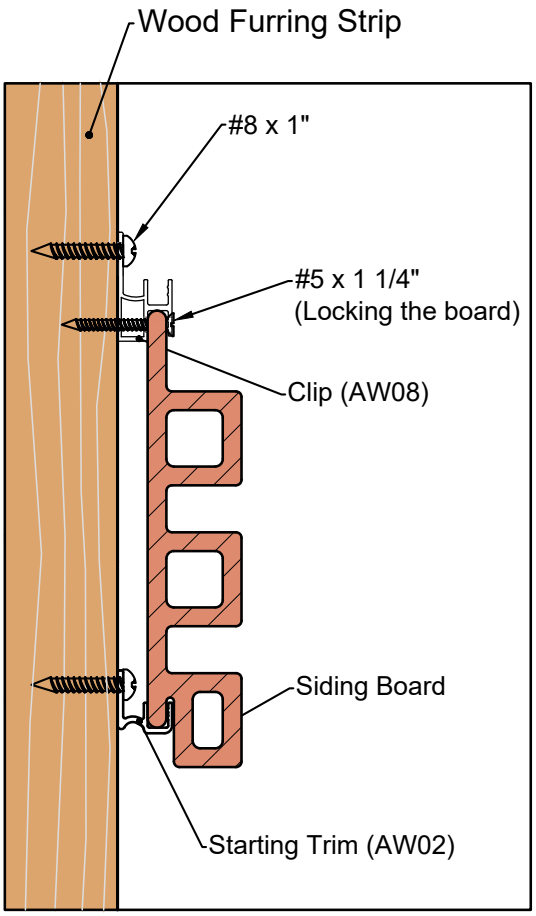

When installing horizontally, it is required to lock the Clip (AW08) at the middle of the board, as shown in ***Diagram A1***.

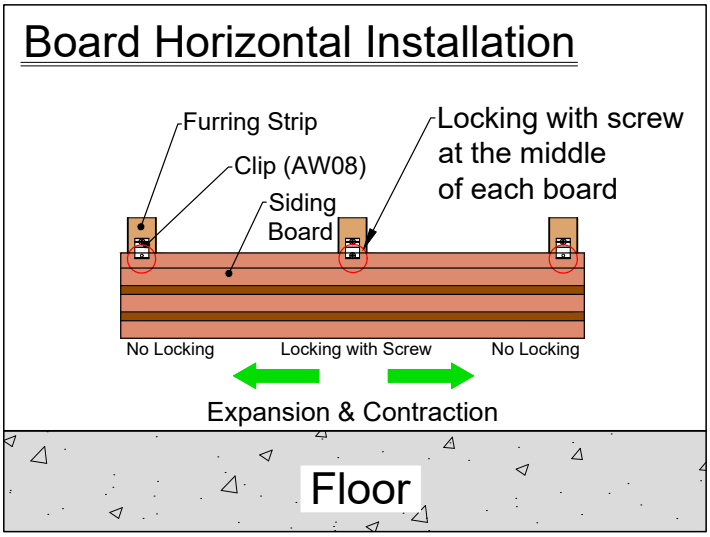

Diagram A1

- Butt Joint Installation -

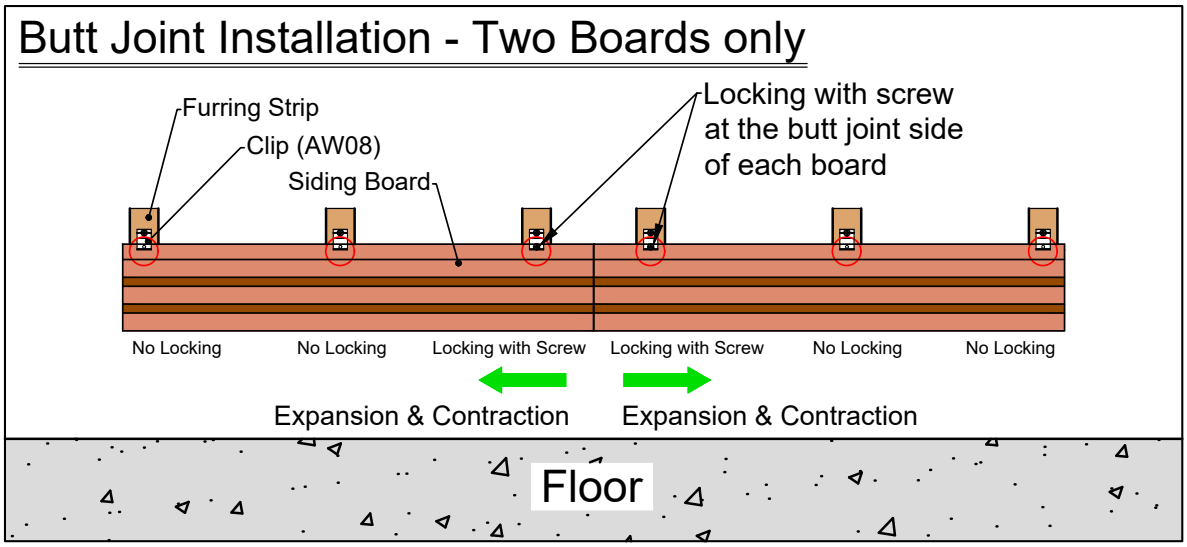

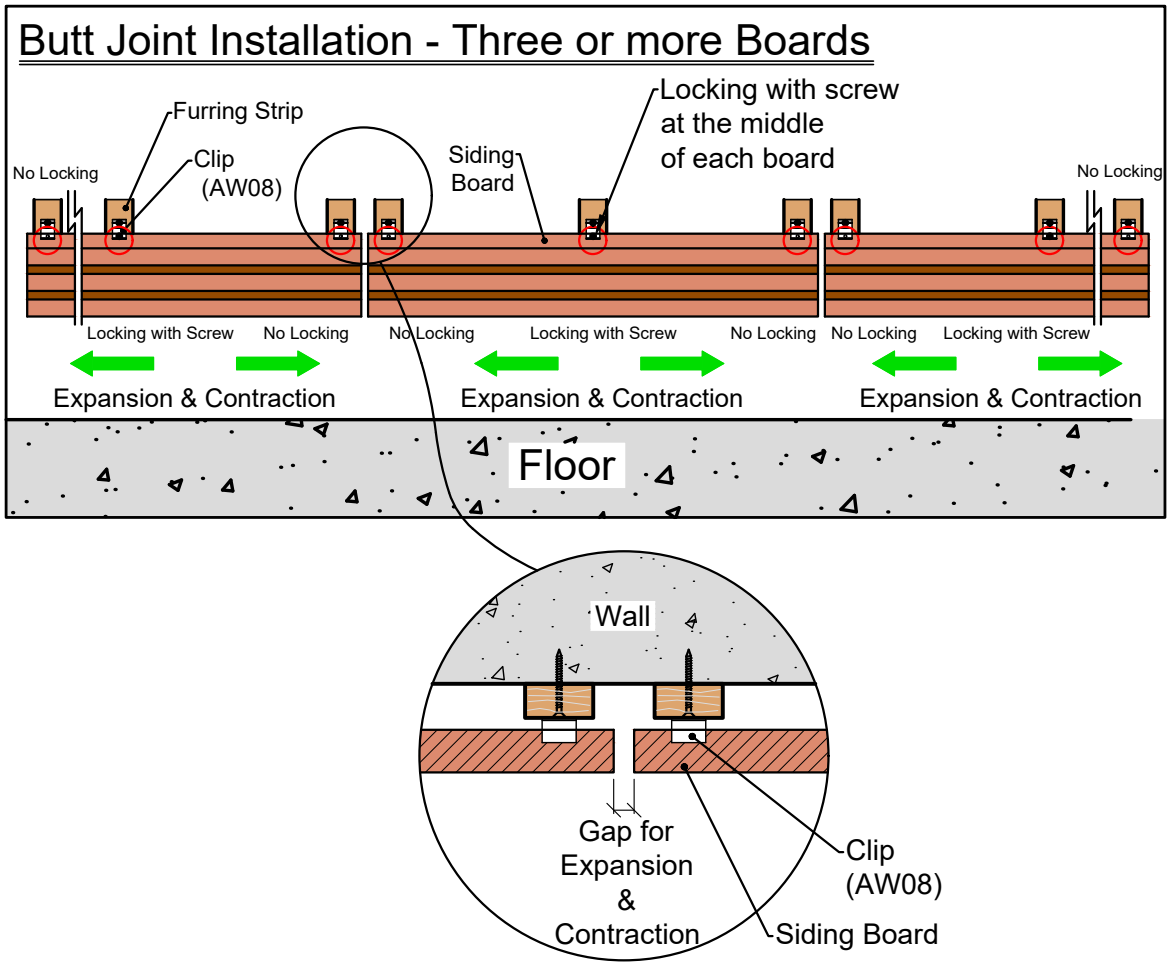

European Siding System Horizontal Installation

Installation Procedure

Step 1: Framing
- **Measure and Chalk the joists**
- **Furring Strips Installation**

Step 2: Trim Installation

Step 3: Siding Board Installation
- **Installing the First course**
- **Installing the Second course**
- **Continuing the remaining installation**
- **Installing the Last board**

Step 4: Finish the Top

1 Framing

The frame needs to be level before installing the siding boards. ***Diagram 1*** shows the wall replicating different scenarious potentially occuring when installing the siding boards.

Wall Side A: Wall between the Outermost Edge and the Inside Corner
Wall Side B: Wall between the Inside Corner and the Outside Corner
Wall Side C: Wall between two Outside Corners
Wall Side D: Wall between the Outside Corner and the Outermost Edge

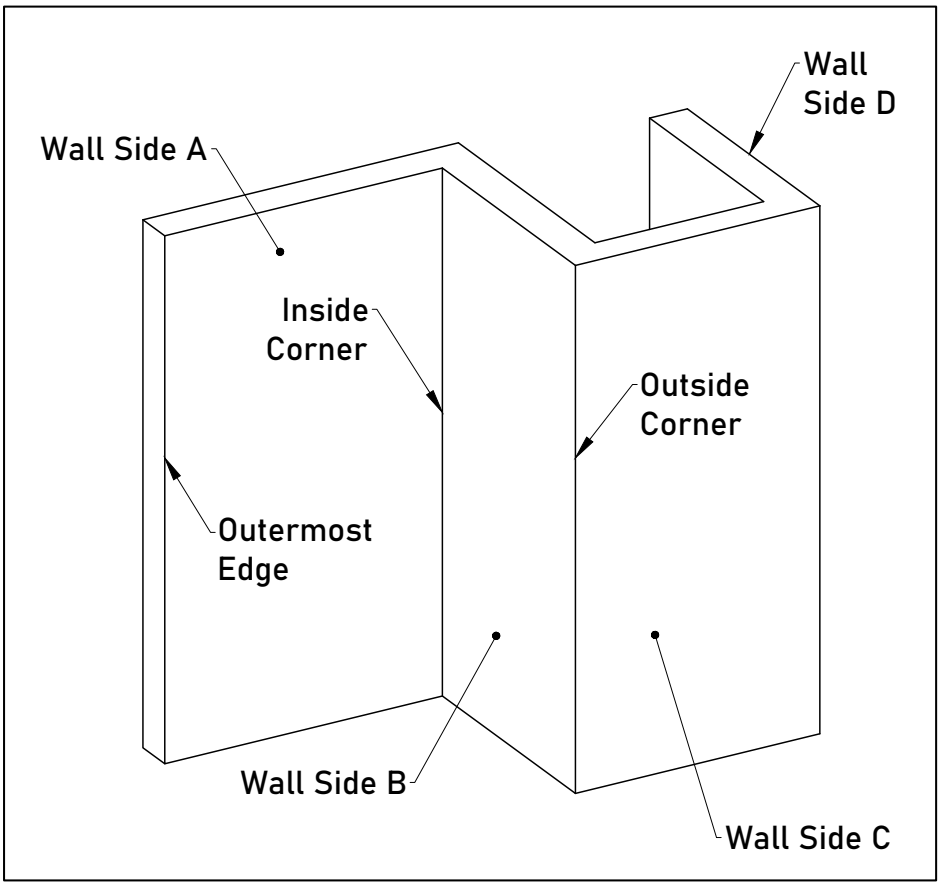

Diagram 1

2 Measure and chalk the furring strips according to the span data specified on ***page 10*** of this installation guide, as shown in ***Diagram 2***.

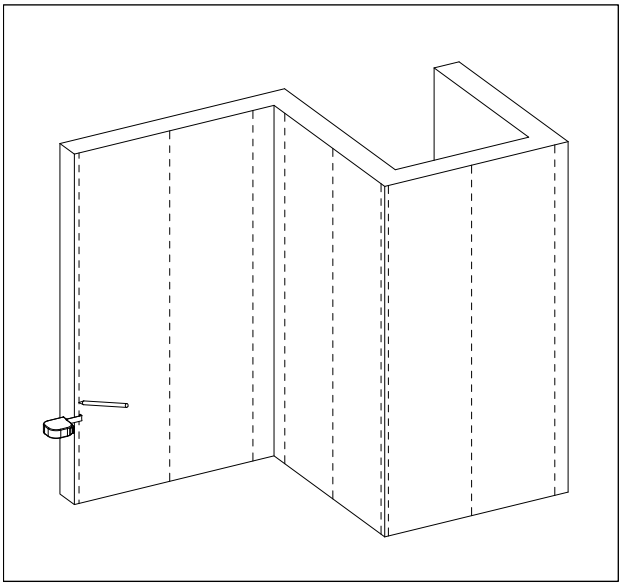

Diagram 2

Note:

1. We are using wood furring strips for this installation. If you are using aluminum furring strips, please refer to *page 9* **of this installation guide for the correct recommended screws.**

2. An adequate span between the furring strips is required to keep the Siding boards from bending. Please review *page 11* **of this installation guide to see what span is needed.**

3 Fix the furring strips onto the wall that you intend to install with screws at least 19 5/8" (500mm) and max to 39 3/8" (1000mm) on center, as shown in ***Diagram 3***.

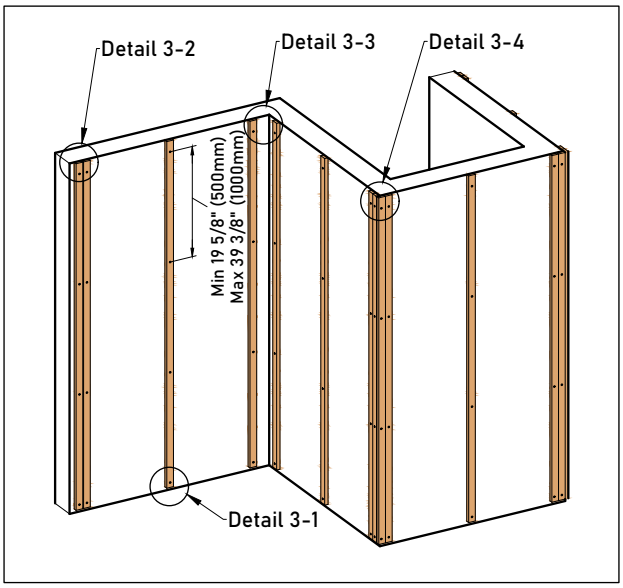

Diagram 3

Note:

1. A minimum gap of 3/4" (20mm) needs to be left at the bottom of each furring strip opposite the floor, as shown in *Detail 3-1*.

2. For the Outermost Edge, please install according to *Detail 3-2*.

3. For the Inside Corner, please install according to *Detail 3-3*.

4. For the Outside Corner, please install according to *Detail 3-4*.

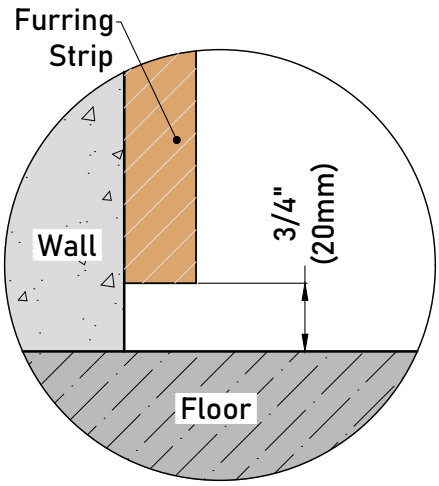

Detail 3-1

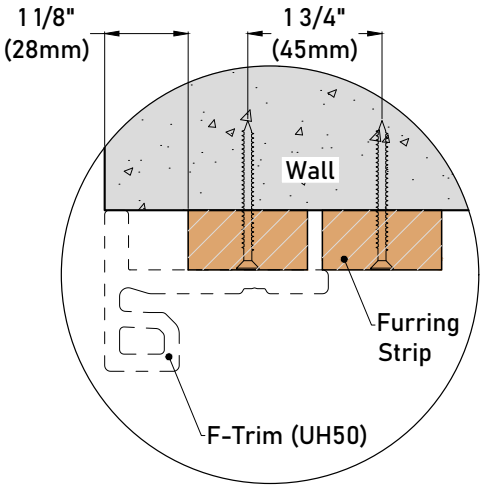

Detail 3-2

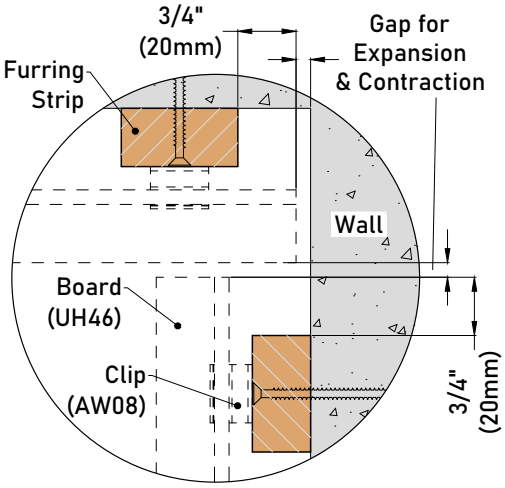

Detail 3-3

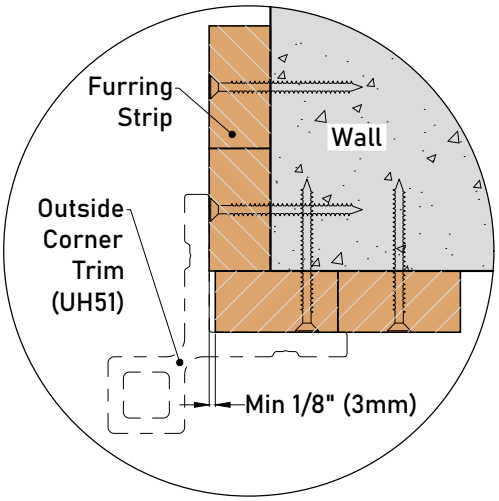

Detail 3-4

4 Trim Installation

Secure the F-Trim (UH50) onto the wall outermost edge joist and the Outside Corner Trim (UH51) onto the wall outside corner joist with screws at least 19 5/8" (500mm) and max to 39 3/8" (1000mm) on center, respectively, as shown in ***Diagram 4***.

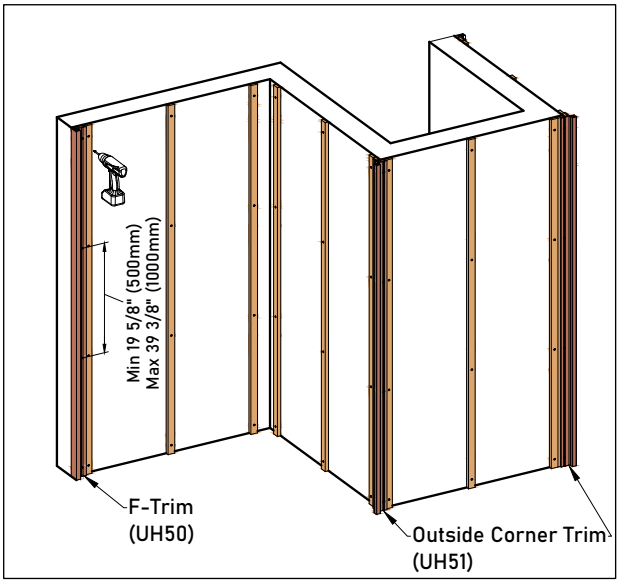

Diagram 4

5 Install the Starting Trim (AW02) at the end of the joists opposite the floor with screws, as shown in ***Diagram 5***.

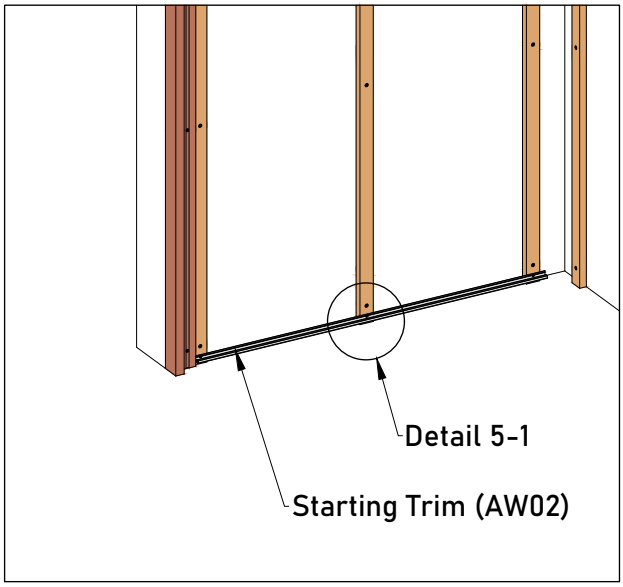

Diagram 5

Note:

1. Outermost Edge

A minimum gap of 3/16" (5mm) needs to be left between the Starting Trim (AW02) and the F-Trim (UH50), as shown in *Detail 5-1*.

2. Inside Corner

A minimum gap of 7/16" (11mm) and 2 1/2" (63mm) needs to be left between the Starting Trim (AW02) and the adjacent wall in the inside corner, as shown in *Detail 5-2*.

3. Outside Corner

A minimum gap of 3/16" (5mm) needs to be left between the Starting Trim (AW02) and the Outside Corner Trim (UH51), as shown in *Detail 5-3*.

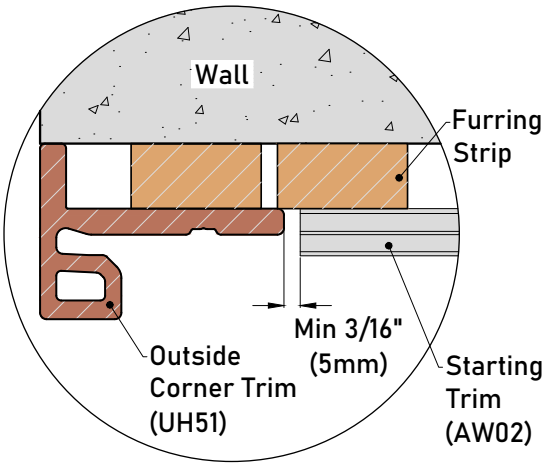

Detail 5-1

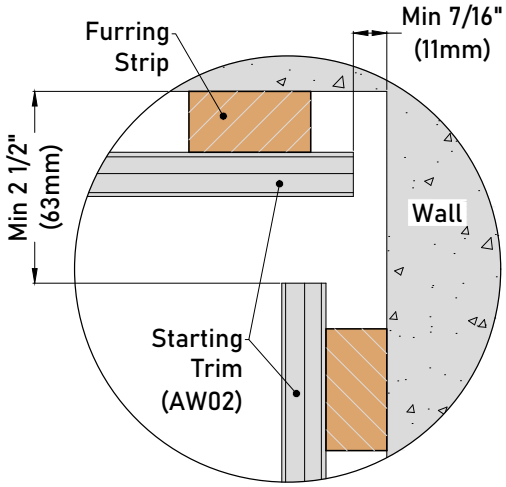

Detail 5-2

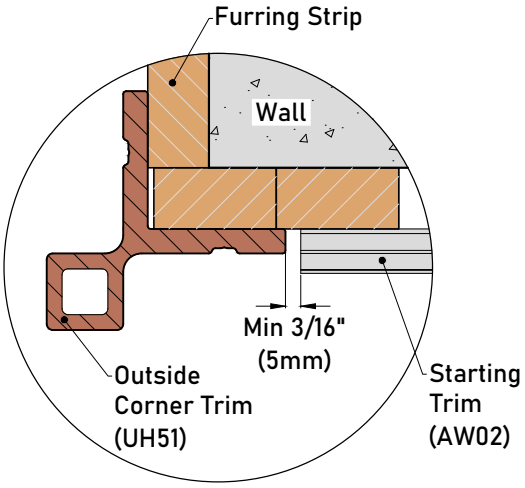

Detail 5-3

Note:
Fasten the Starting Trim (AW02) with a clearance of 1 3/4" (45mm) above the floor, as shown in *Detail 5-4*.

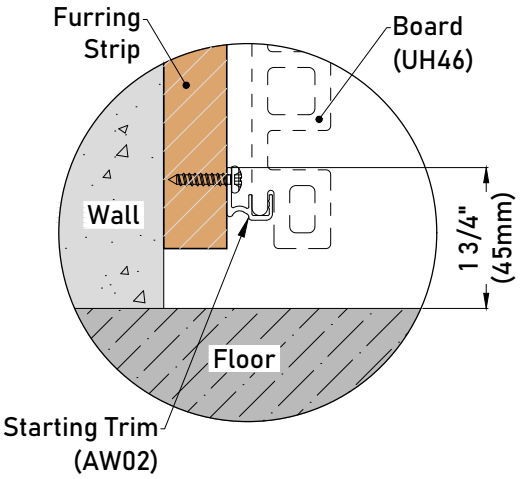

Detail 5-4

6 Siding Board Installation

Installing the First course

Put the first European Siding Board (UH46) over the Starting Trim (AW02) and fasten it onto the furring strip with Clip (AW08), as shown in ***Diagram 6*** and ***Detail 6-1***.

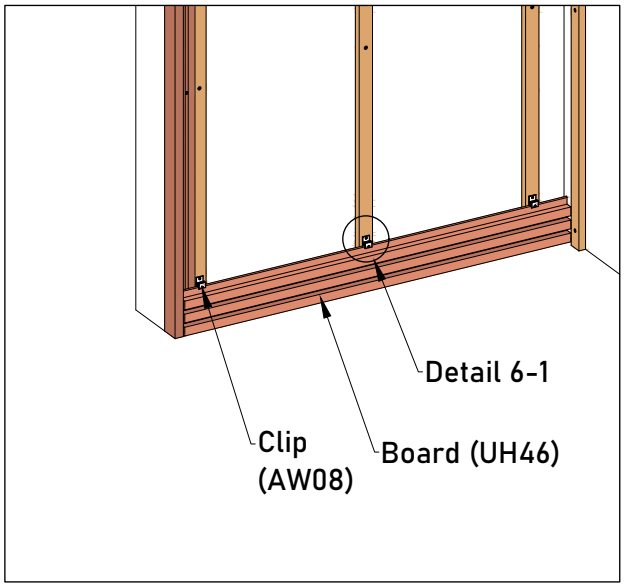

Diagram 6

Note:
The gap between the siding board and the floor should be at least 3/4" (20mm), as shown in *Detail 6-1*.

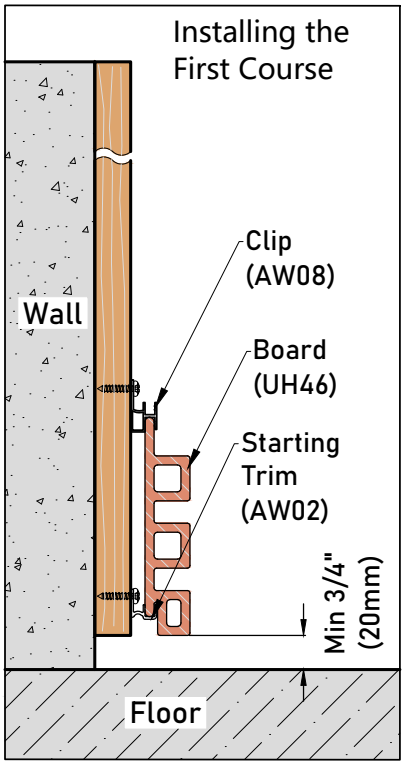

Detail 6-1

Note:
Since the composite wood must allow for expansion and contraction due to temperature change, the board must be locked at one fixed point but only one point to allow the remaining board to move freely. When installing horizontally, it is required to lock the Clip (AW08) at the middle of each board, as shown in *Detail 6-2*.
DO NOT LOCK any other Clips (AW08) for the same board.
Please review *page 13*, *"Locking the Siding Board"* **of this installation guide for further information.**

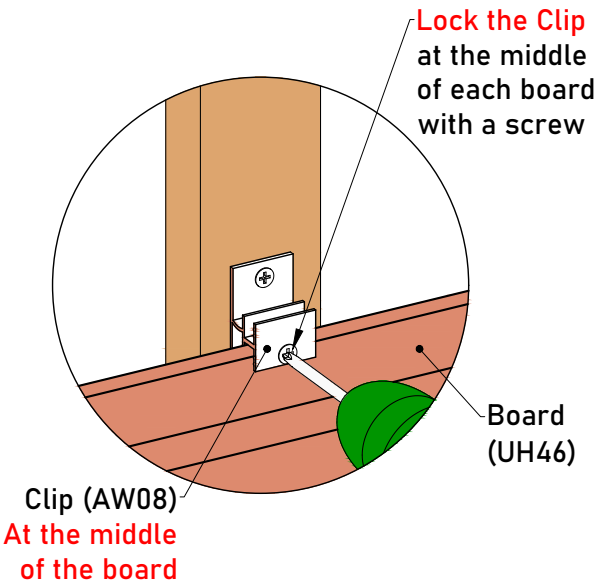

Detail 6-2

Note:
The gaps between the siding board, F-Trim (UH50), Outside Corner Trim (UH51), the adjacent wall, and board in the inside corner are vital to avoid warping or buckling. Please select the appropriate gap value according to the *Expansion and Contraction Values* **table on** *page 12* **of this installation guide.**

Outermost Edge, as shown in *Detail 6-3*
Inside Corner, as shown in *Detail 6-4*
Outside Corner, as shown in *Detail 6-5*

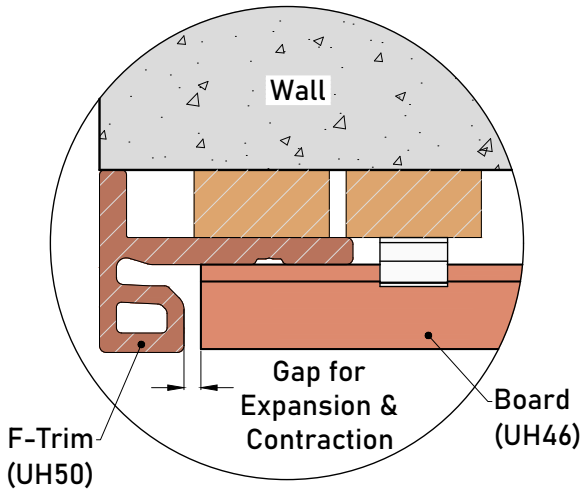

Detail 6-3

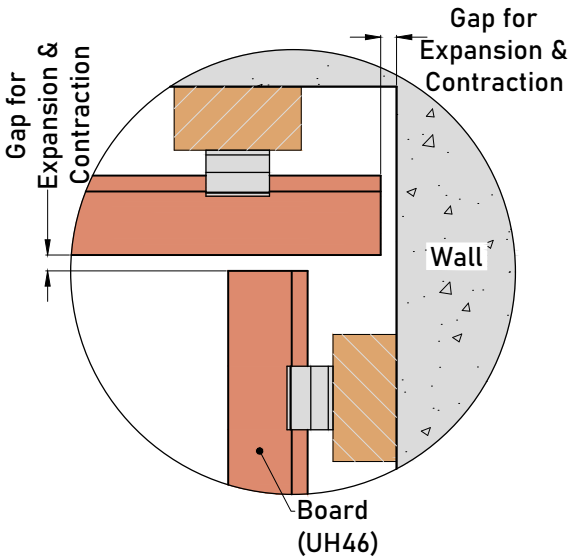

Detail 6-4

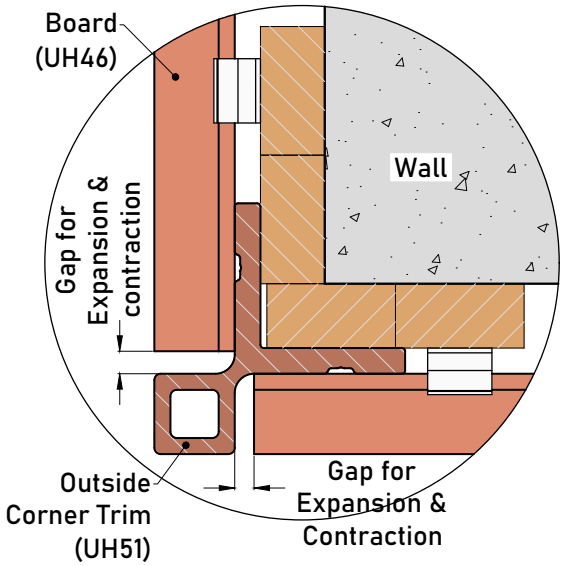

Detail 6-5

7 Installing the Second course

Put the second board over the first board's Clip (AW08) and fasten it onto the furring strip with the Clip (AW08), as shown in ***Diagram 7***, ***Detail 7-1***, ***Detail 7-2***.

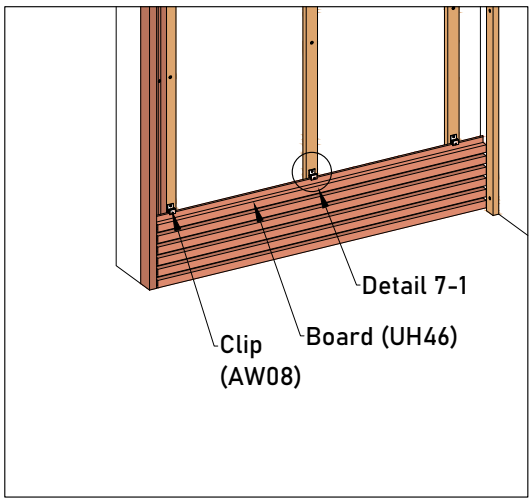

Diagram 7

Note:
Since the composite wood must allow for expansion and contraction due to temperature change, the board must be locked at one fixed point but only one point to allow the remaining board to move freely. When installing horizontally, it is required to lock the Clip (AW08) at the middle of each board, as shown in *Detail 7-1*.
DO NOT LOCK any other Clips (AW08) for the same board.
Please review *page 13*, *"Locking the Siding Board"* **of this installation guide for further information.**

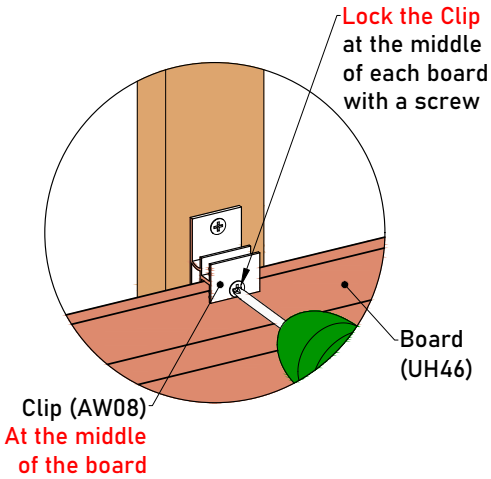

Detail 7-1

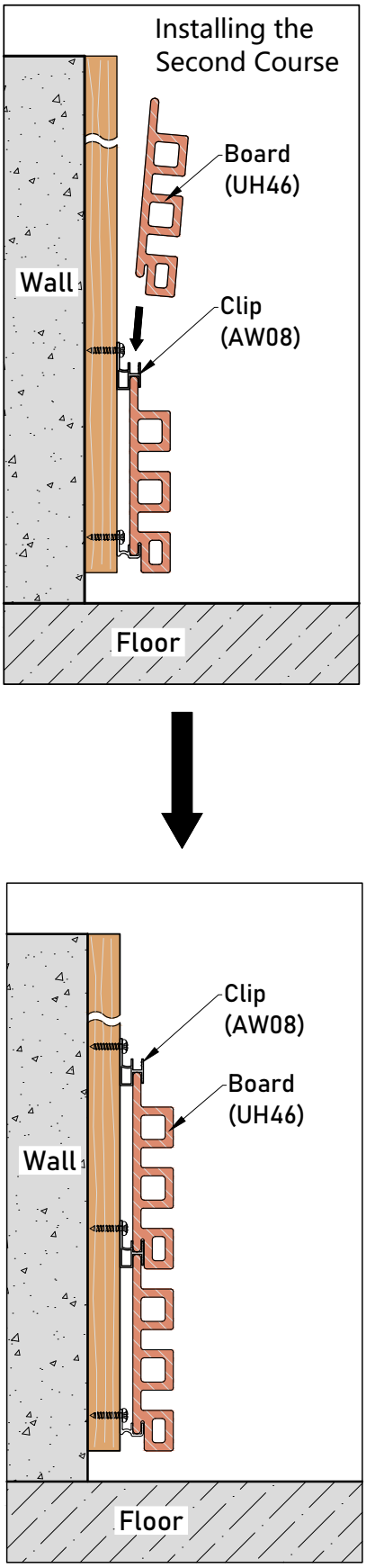

Detail 7-2

8 Installing the Last board

When you are at the last board, measure the distance between the top of the furring strip and the Clip (AW08), as shown in ***Diagram 8*** and ***Detail 8-1***.

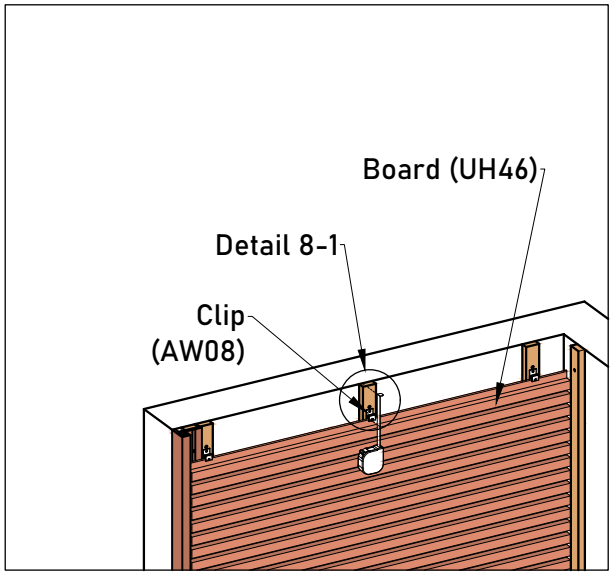

Diagram 8

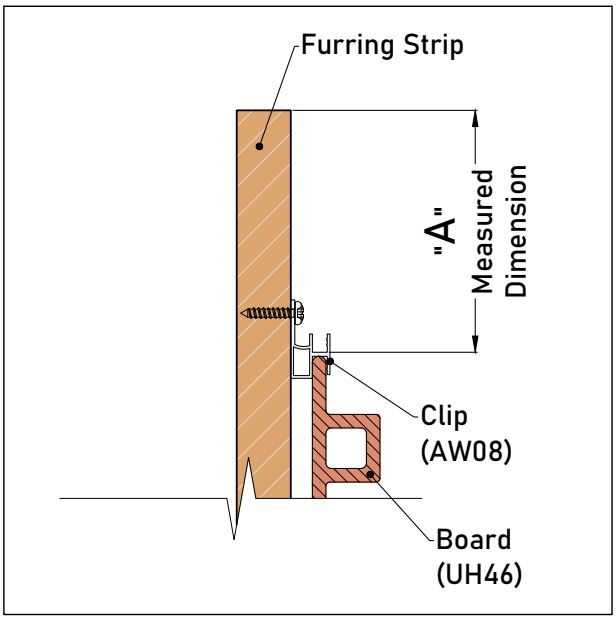

Detail 8-1

9 Cut the board according to the measured dimension and the selected option on how to finish the top, as shown in ***Diagram 9*** and ***Detail 9-1***.

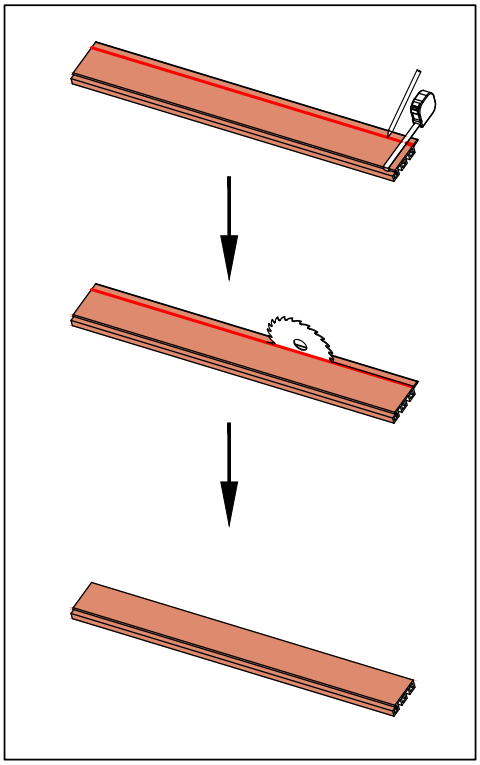

Diagram 9

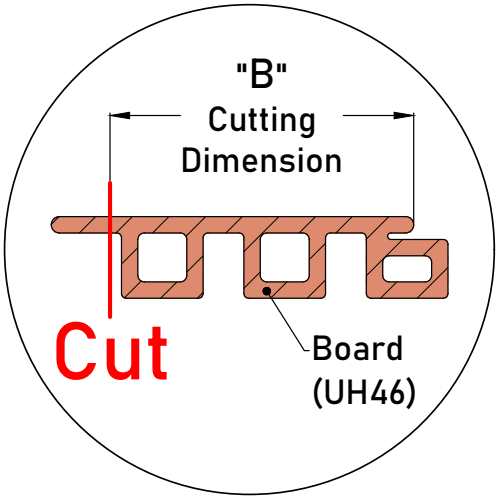

Detail 9-1

Option 1
Finish the top with cut F-Trim (UH50), as shown in ***Detail 9-2***.

Cutting Dimension "**B**" = "**A**" (measured dimension) - 11/16" (18mm)

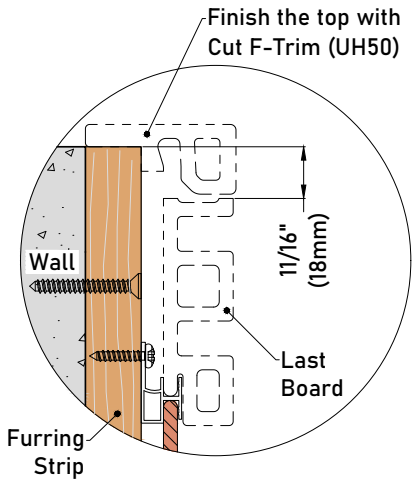

Detail 9-2

Option 2
No Finish the top or Finish the Top with metal flashing, as shown in ***Detail 9-3***.

Cutting Dimension "**B**" = "**A**" (measured dimension)

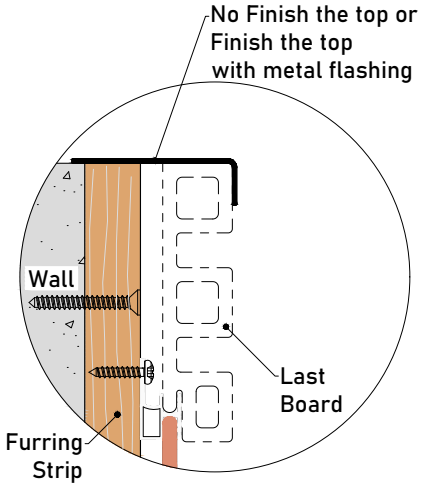

Detail 9-3

10 Install the Rubber Stopper (T-7) onto each furring strip with screws, as shown in ***Diagram 10***.

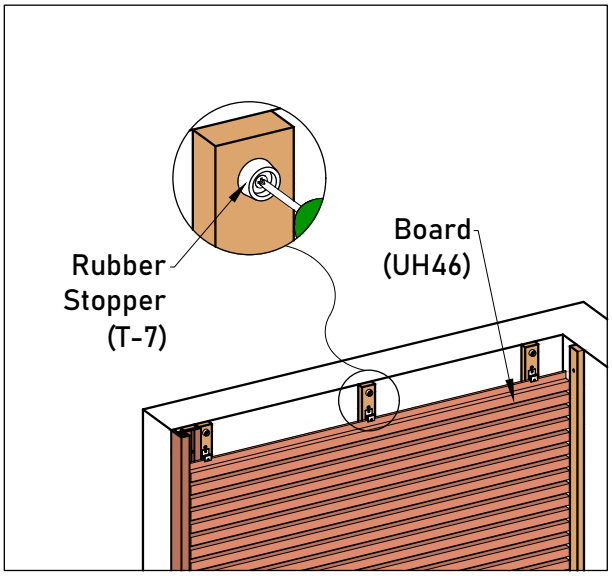

Diagram 10

Option 1
Finish the top with cut F-Trim (UH50):

Install the Rubber Stopper (T-7), as shown in ***Detail 10-1***.

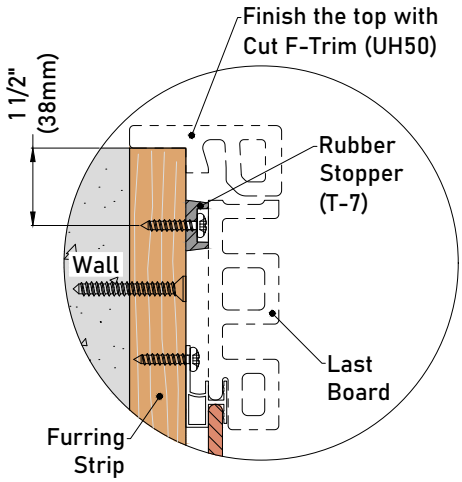

Detail 10-1

Option 2
No Finish the Top or Finish the Top with Metal Flashing:

Install the Rubber Stopper, as shown in ***Detail 10-2***.

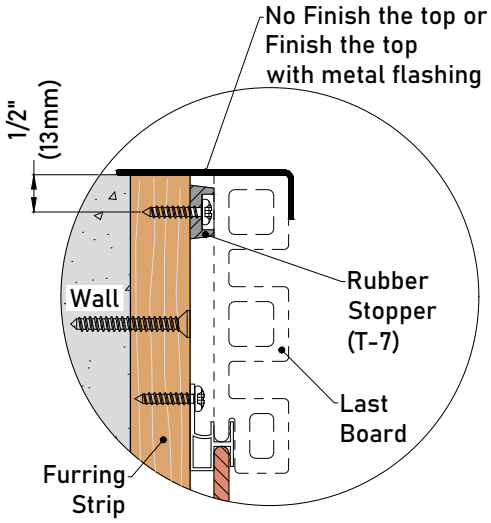

Detail 10-2

11 Put the cut siding board over the Clip (AW08) in place and then face fix it onto each furring strip along the length of the board against the Rubber Stopper (T-7), as shown in ***Diagram 11***.

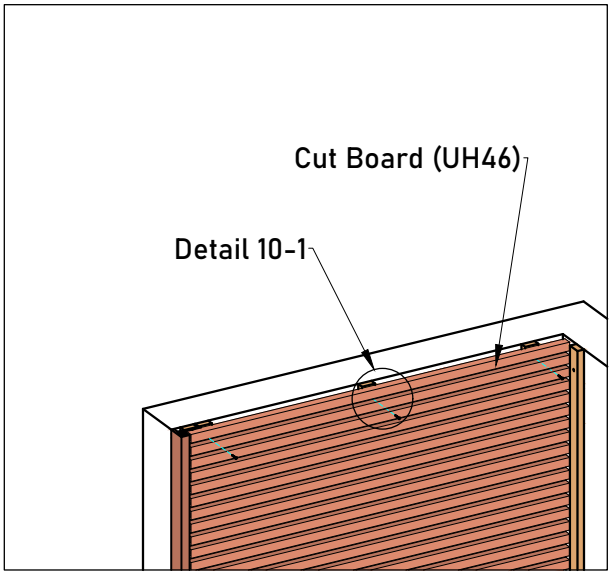

Diagram 11

Option 1
Finish the top with cut F-Trim (UH50):

Install the last board, as shown in ***Detail 11-1***.

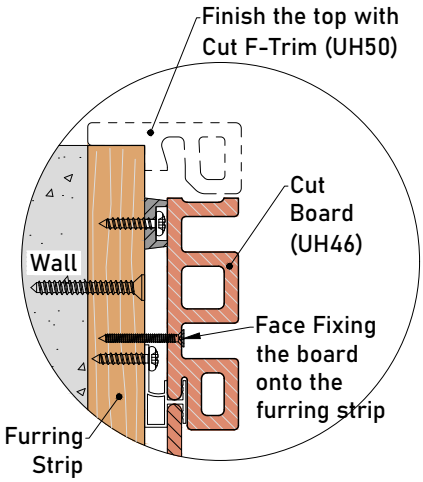

Detail 11-1

Option 2
Finish the top with Metal Flashing:

Install the last board, as shown in ***Detail 11-2***.

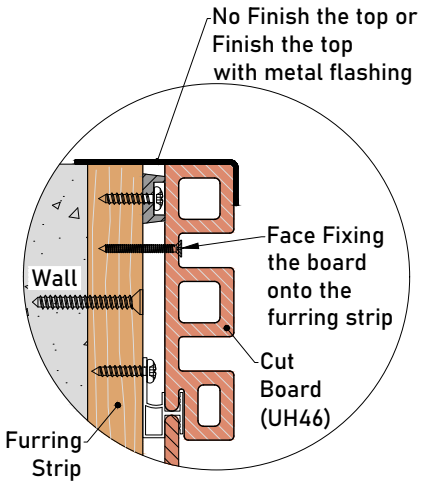

Detail 11-2

12 Finish the Top

There are two options to finish the top of the siding.

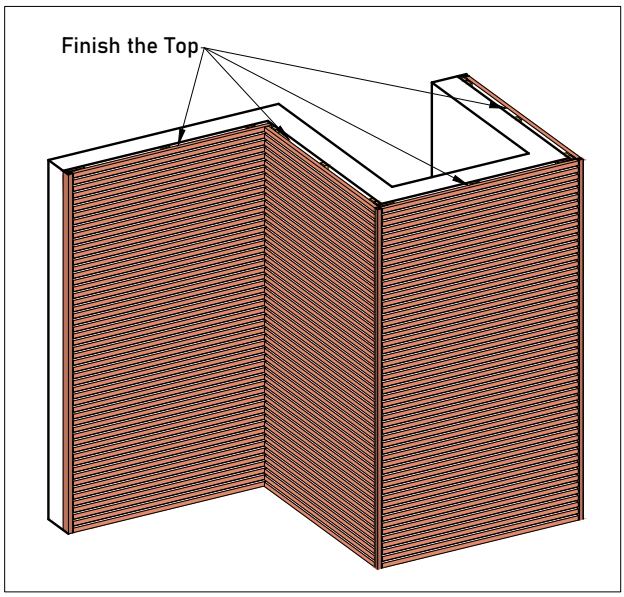

Diagram 12

Option 1
Using F-Trim (UH50):

Cut the F-Trim (UH50) to make the centerpiece shorter without interfering with the Rubber Stopper (T-7), as shown in ***Detail 12-1***.

Then put the cut F-Trim (UH50) in place and secure it onto the furring strip with screws, as shown in ***Detail 12-2***.

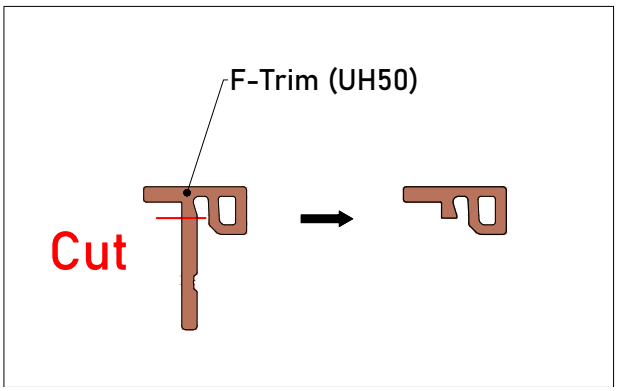

Detail 12-1

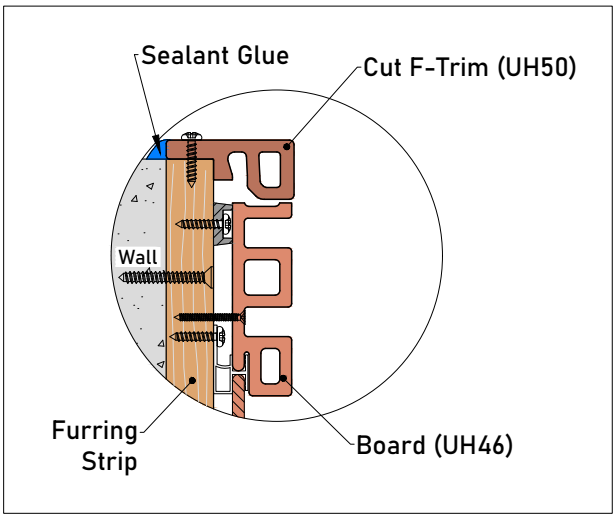

Detail 12-2

Option 2
Using Metal Flashing:

Put a Metal Flashing over the top of the siding and fix it onto the furring strip with screws, as shown in ***Detail 12-3***.

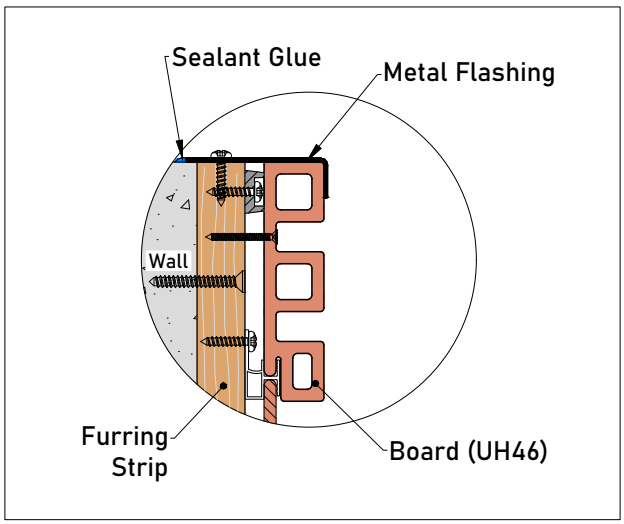

Detail 12-3

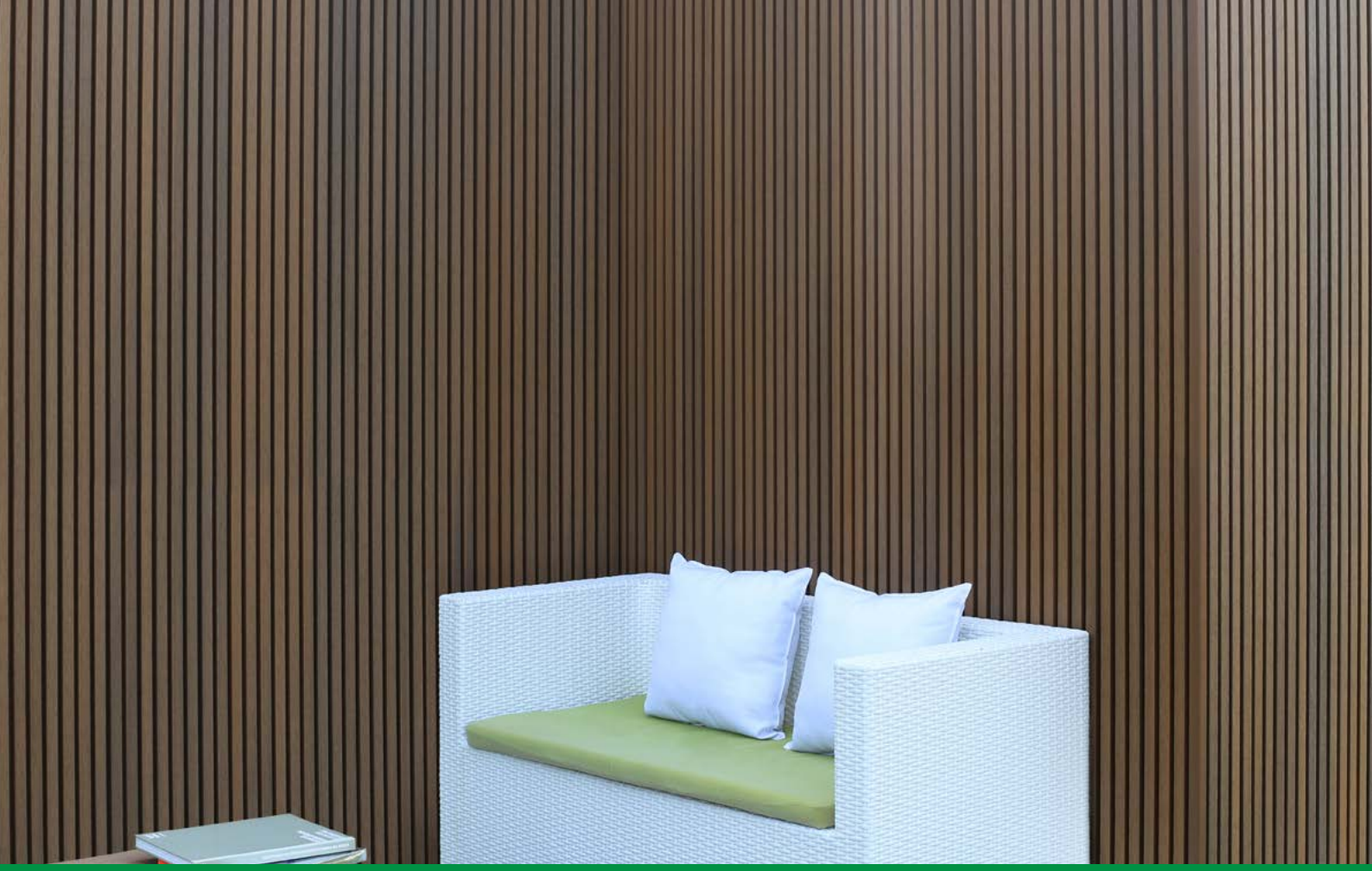

European Siding System Horizontal Installation Guide

v20210324US

©2021 Huidong Meixin Plastic Lumber Products Manufacturing Co., Ltd.
NewTechWood® is a registered trademark of Huidong Meixin Plastic Lumber Products Manufacturing Co., Ltd. To obtain a copy of the most current version of this installation guide, visit us online at www.newtechwood.com.

NewTechWood®