GIBRALTAR INDUSTRIES

INSTALLATION GUIDELINES

CODE CAP & BASE

Gibraltar Code Cap and Base combinations are adjustable for use on flat roofs to 5/12 pitch. Code Caps are tested and approved on Type “B” Gas Vents. 24 gauge Type 3003 Aluminum.

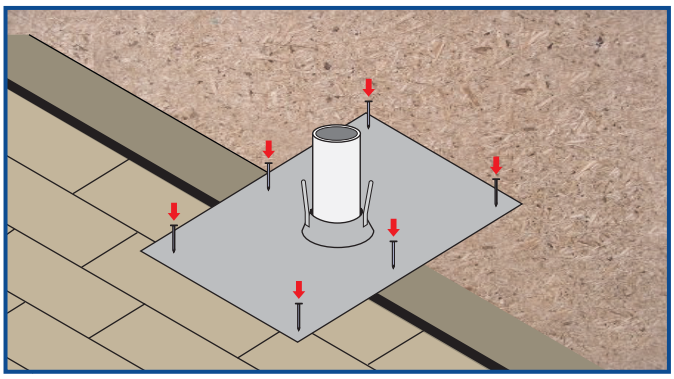

1. Shingle up to the exhaust pipe then slip on base flashing. Secure with 6 roofing nails.

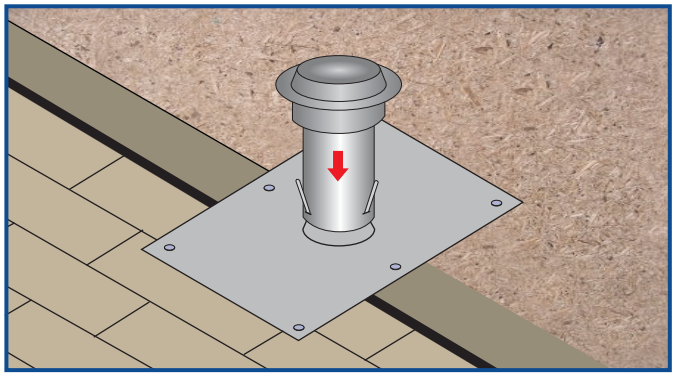

2. Align Cap Slots with Base Tabs, then Lower cap onto conical base.

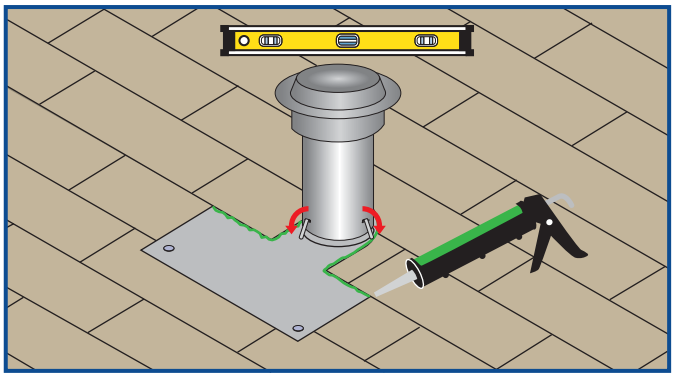

3. Adjust the top piece to make it straight and level, then bend the tabs over to secure it in place.

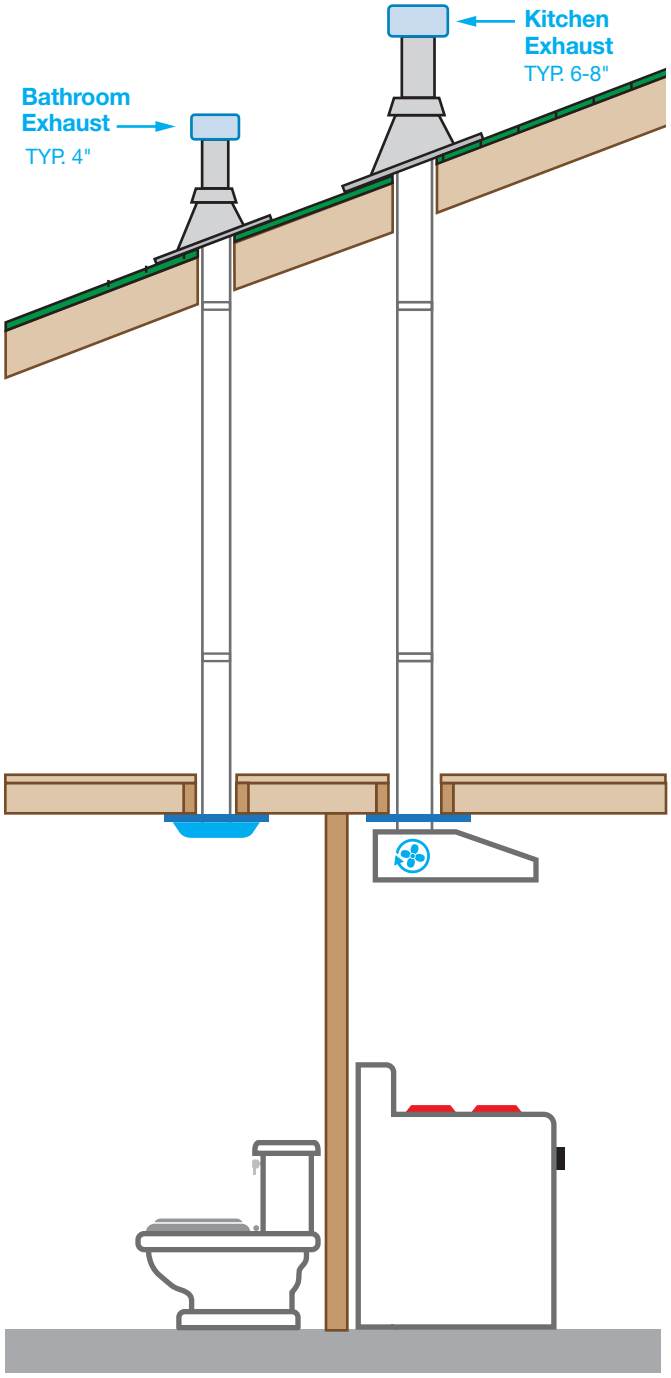

CAUTION!

Working above grade is inherently dangerous, be sure that proper fall protection measures are in place.
When working with power tools and sheet metal, gloves and eye protection are absolutely required.

These basic installation guidelines are for use with typical or standard applications. It is always recommended to seek advice from a licensed professional, and to check with your local building inspector or building permit office for approvals and possible variations that may apply.