Replacement Parts List

GLACIER BAY®

Builders 4 in. Centerset 2-Handle Low-Arc Bathroom Faucet in Chrome

MODEL	STORE SKU #	FINISH
67091W-6A01	505838	Polished Chrome

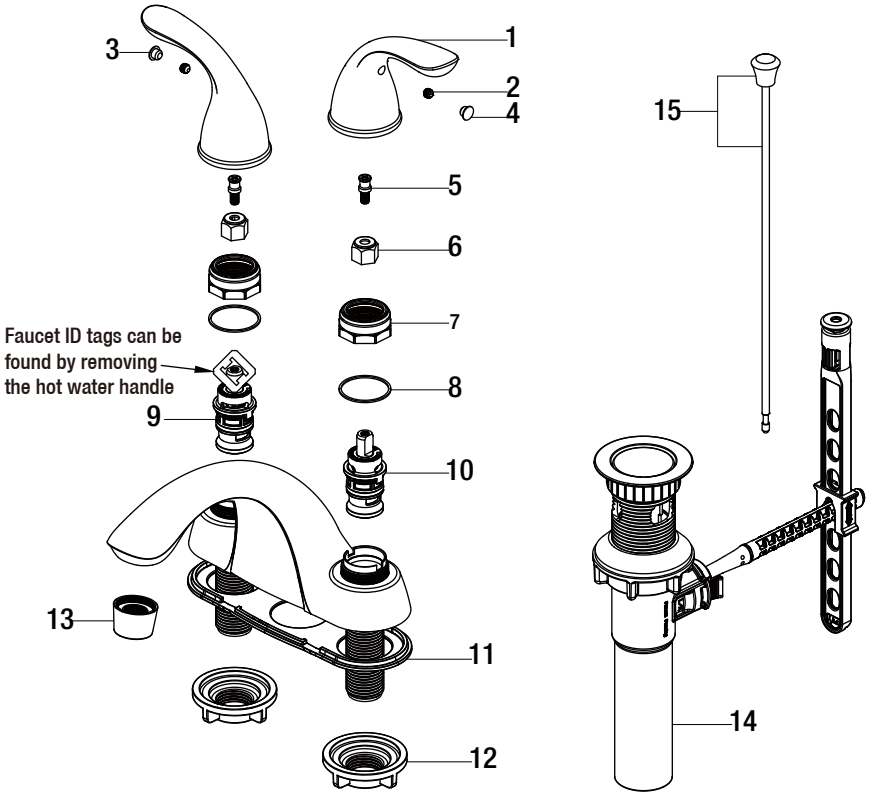

Many replacement parts can be purchased online or at your local store. Please use the table below to identify the part SKU number needed, go to HOMEDEPOT.COM, and check for online and store availability. If you can't find the part you are looking for, please call 1-855-HD-GLACIER.

Part	Description	Part #	Internet SKU #	Store SKU #
1	Handle	RP1304101	206864750	
2	Set screw	RP50002		
3	Index H	RP10004		
4	Index C	RP10005		
5	Screw	RP50003		
6	Inverter	RP64044	206671349	
7	Bonnet nut	RP70435	206864739	
8	Washer	RP64124		

Part	Description	Part #	Internet SKU #	Store SKU #
9	Cartridge H	RP20067	301158139	
10	Cartridge C	RP20068	301158129	
11	Gasket	RP80259		
12	Mounting nut	RP56001	203193994	579276
13	Aerator	RP3021701		
14	Drain assembly less lift rod	RP4022801		
15	Lift rod	RP4026601		