OWNER'S MANUAL

English 119 PO

IMPORTANT SAFETY RULES

Read, understand, and follow all instructions carefully before installing and using this product.

ULTRA XTR® RECTANGULAR POOL

15' x 9' (457cm x 274cm)
18' x 9' (549cm x 274cm)
24' x 12' (732cm x 366cm)
32' x 16' (975cm x 488cm)

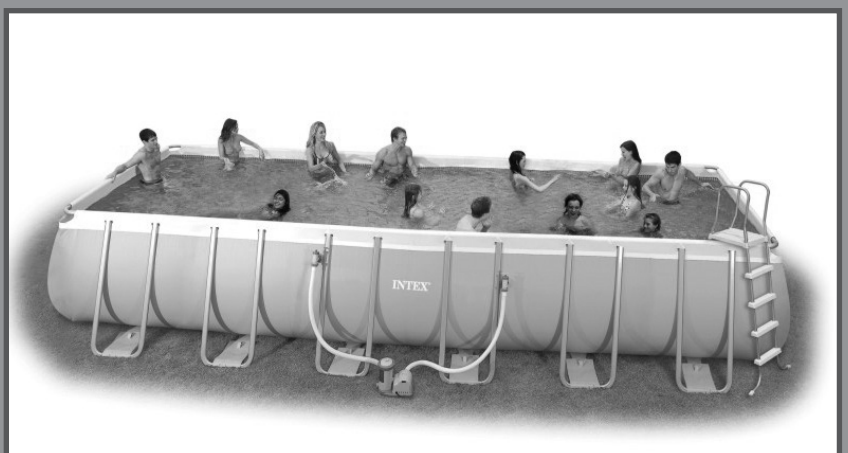

For illustrative purposes only. Accessories may not be provided with pool.

Don't forget to try these other fine Intex products: Pools, Pool Accessories, Inflatable Pools and In-Home Toys, Airbeds and Boats available at fine retailers or visit our website listed below. Due to a policy of continuous product improvement, Intex reserves the right to change specifications and appearance, which may result in updates to the instruction manual without notice.

INTEX®

IMPORTANT!
DO NOT RETURN PRODUCT TO STORE

To purchase parts and accessories or to obtain non-technical assistance, Visit

www.intexcorp.com

For technical assistance, missing parts or warranty claims call (for U.S. and Canadian Residents):

1-310-549-8235

Monday through Friday, 8:30am to 5:00pm Pacific Time

TABLE OF CONTENTS

Warnings..... **3-5**

Parts References..... **6-9**

Setup Instructions..... **10-14**

General Aquatic Safety..... **15**

Pool Maintenance & Chemicals..... **16**

Winter Preparations..... **17**

Long Term Storage & Drainage..... **18**

Troubleshooting..... **19**

Limited Warranty..... **20**

Introduction:

Thanks for buying an Intex pool. Please read this manual before setting up your pool. This information will help extend the pool life and make the pool safer for your family's enjoyment. A team of 2-4 people is recommended for pool set up. Additional people will speed up the installation.

No tools are required for the assembly.

IMPORTANT SAFETY RULES

Read, Understand and Follow All Instructions Carefully Before Installing and Using this Product.

⚠ WARNING

- **Continuous and competent adult supervision of children and the disabled is required at all times.**
- Secure all doors, windows and safety barriers to prevent unauthorized, unintentional or unsupervised pool entry.
- Install a safety barrier that will eliminate access to the pool for young children and pets.
- Pool and pool accessories are to be assembled and disassembled by adults only.
- Never dive, jump or slide into an above-ground pool or any shallow body of water.
- Failure to set up pool on flat, level, compact ground or over filling could result in the pool's collapse and the possibility that a person lounging in the pool could be swept out/ejected.
- Do not lean, straddle, or exert pressure on the inflatable ring or top rim as injury or flooding could occur. Do not allow anyone to sit on, climb, or straddle the sides of the pool.
- Remove all toys and flotation devices from, in, and around the pool when it is not in use. Objects in the pool attract young children.
- Keep toys, chairs, tables, or any objects that a child could climb on at least four feet (1.22 meters) away from the pool.
- Keep rescue equipment by the pool and clearly post emergency numbers at the phone closest to the pool. Examples of rescue equipment: coast guard approved ring buoy with attached rope, strong rigid pole not less than twelve feet (12') [3.66m] long.
- Never swim alone or allow others to swim alone.
- Keep your pool clean and clear. The pool floor must be visible at all times from the outside barrier of the pool.
- If swimming at night use properly installed artificial lighting to illuminate all safety signs, ladders, pool floor and walkways.
- Stay away from the pool when using alcohol or drugs/medication.
- Keep children away from pool covers to avoid entanglement, drowning, or other serious injury.
- Pool covers must be completely removed **before** pool use. Children and adults cannot be seen under a pool cover.
- Do not cover the pool while you or anyone else is in the pool.
- Keep the pool and pool area clean and clear to avoid slips and falls and objects that may cause injury.
- Protect all pool occupants from recreational water illnesses by keeping the pool water sanitized. Don't swallow the pool water. Practice good hygiene.
- All pools are subject to wear and deterioration. Certain types of excessive or accelerated deterioration can lead to an operation failure, and can ultimately cause the loss of large quantities of water from your pool. Therefore, it is very important that you properly maintain your pool on a regular basis.
- This pool is for outdoor use only.
- Properly winterize or store the pool when it is not in use for an extended period of time, such as during winter months. Please see "Winter Preparations" or "Long-Term Storage & Drainage" sections.
- All electrical components shall be installed in accordance with Article 680 of the National Electrical Code 1999 (NEC®) "Swimming Pools, Fountains and Similar Installations" or its latest approved edition.

POOL BARRIERS AND COVERS ARE NOT SUBSTITUTES FOR CONTINUOUS AND COMPETENT ADULT SUPERVISION. POOL DOES NOT COME WITH A LIFEGUARD. ADULTS ARE THEREFORE REQUIRED TO ACT AS LIFEGUARDS OR WATER WATCHERS AND PROTECT THE LIVES OF ALL POOL USERS, ESPECIALLY CHILDREN, IN AND AROUND THE POOL.

FAILURE TO FOLLOW THESE WARNINGS MAY RESULT IN PROPERTY DAMAGE, SERIOUS INJURY OR DEATH.

Advisory:
Pool owners may need to comply with local or state laws relating to childproof fencing, safety barriers, lighting, and other safety requirements. Customers should contact their local building code enforcement office for further details.

IMPORTANT SAFETY RULES

Read and follow all safety information and instructions.
Keep for future reference.
Failure to follow these warnings and instructions can result in serious injury or death to users, especially children.

⚠ WARNING

NO DIVING OR JUMPING SHALLOW WATER

PREVENT DROWNING

Supervise, Supervise, Supervise

STAY AWAY FROM DRAINS AND SUCTIONS FITTINGS

- Children, especially children under five years, are at high risk of drowning.
- Remove or secure ladder when not in use.
- Closely watch children who are in or near this pool.
- Diving or jumping may result in broken neck, paralysis, permanent injury or death.
- If drain or suction outlet cover is missing or broken, your hair, body and jewelry can get sucked into drain. You could be held underwater and drown! Do not use the pool if drain or suction outlet cover is missing or broken.
- Empty pool or prevent access when not in use. Store the empty pool in such a way that it does not collect water from rain or any other source.

Prevent Young Children From Drowning:

- Keep unsupervised children from accessing the pool by installing fencing or approved barrier around all sides of pool. State or local laws or codes may require fencing or other approved barriers. Check state or local laws and codes before setting up pool. Refer to the list of barrier recommendations and guidelines as described in CPSC Publication No. 362. "Safety Barrier Guideline for Home Pools" found at www.poolsafely.gov.
- Drowning occurs silently and quickly. Assign an adult to supervise pool and wear provided water watcher tag.
- Keep children in your direct sight when they are in or near pool. Pool presents a drowning hazard even during filling and draining of the pool. Maintain constant supervision of children and do not remove any safety barriers until the pool is completely empty and stowed away.
- When searching for a missing child, check the pool first, even if you think your child is in the house.

Prevent Young Children From Gaining Access to Pool:

- Toddlers can climb ladder and get into pool. Before leaving pool area, remove ladder or other means of access, and safely store away from pool.
- When leaving the pool, remove floats and toys from the pool that might attract a child.
- Position furniture (for example, tables, chairs) away from pool so that children cannot climb on it to gain access to the pool.
- If a filter pump is included with the pool, locate pumps and filters in such a way that children cannot climb on them and gain access to the pool.

Electrocution Risk:

- Keep all electrical lines, radios, speakers and other electrical appliances away from the pool.
- Do not place pool near or under overhead electrical lines.

Suction Risk:

- If a filter pump is included with the pool, replacement pump shall never exceed the maximum flow rate marked on the suction fitting.

Be Prepared to Respond to an Emergency:

- Keep a working phone and a list of emergency numbers near the pool.
- Become certified in cardiopulmonary resuscitation (CPR) so you can respond to an emergency. In the event of an emergency, immediate use of CPR can make a life-saving difference.

Barriers for Residential Swimming Pool Guidelines:
An outdoor swimming pool, including an inground, aboveground, or onground pool, hot tub, or spa, should be provided with a barrier which complies with the following:

1. The top of the barrier should be at least 48 inches above grade measured on the side of the barrier which faces away from the swimming pool. The maximum vertical clearance between grade and the bottom of the barrier should be 4 inches measured on the side of the barrier which faces away from the swimming pool. Where the top of the pool structure is above grade, such as an aboveground pool, the barrier may be at ground level, such as the pool structure, or mounted on top of the pool structure. Where the barrier is mounted on top of the pool structure, the maximum vertical clearance between the top of the pool structure and the bottom of the barrier should be 4 inches.

2. Openings in the barrier should not allow passage of a 4-inch diameter sphere.

3. Solid barriers, which do not have openings, such as a masonry or stone wall, should not contain indentations or protrusions except for normal construction tolerances and tooled masonry joints.

4. Where the barrier is composed of horizontal and vertical members and the distance between the tops of the horizontal members is less than 45 inches, the horizontal members should be located on the swimming pool side of the fence. Spacing between vertical members should not exceed 1-3/4 inches in width. Where there are decorative cutouts, spacing within the cutouts should not exceed 1-3/4 inches in width.

5. Where the barrier is composed of horizontal and vertical members and the distance between the tops of the horizontal members is 45 inches or more, spacing between vertical members should not exceed 4 inches. Where there are decorative cutouts, spacing within the cutouts should not exceed 1-3/4 inches in width.

6. Maximum mesh size for chain link fences should not exceed 1-1/4 inch square unless the fence is provided with slats fastened at the top or the bottom which reduce the openings to no more than 1-3/4 inches.

7. Where the barrier is composed of diagonal members, such as a lattice fence, the maximum opening formed by the diagonal members should be no more than 1-3/4 inches.

8. Access gates to the pool should comply with Section I, Paragraphs 1 through 7, and should be equipped to accommodate a locking device. Pedestrian access gates should open outward, away from the pool, and should be self-closing and have a self latching device. Gates other than pedestrian access gates should have a self-latching device. Where the release mechanism of the self-latching device is located less than 54 inches from the bottom of the gate, (a) the release mechanism should be located on the pool side of the gate at least 3 inches below the top of the gate and (b) the gate and barrier should have no opening greater than 1/2 inch within 18 inches of the release mechanism.

9. Where a wall of a dwelling serves as part of the barrier, one of the following should apply:

(a) All doors with direct access to the pool through that wall should be equipped with an alarm which produces an audible warning when the door and its screen, if present, are opened. The alarm should sound continuously for a minimum of 30 seconds within 7 seconds after the door is opened. Alarms should meet the requirements of UL 2017 General- Purpose Signaling Devices and Systems, Section 77. The alarm should have a minimum sound pressure rating of 85 dBA at 10 feet and the sound of the alarm should be distinctive from other household sounds, such as smoke alarms, telephones, and door bells. The alarm should automatically reset under all conditions. The alarm should be equipped with manual means, such as touchpads or switches, to temporarily deactivate the alarm for a single opening of the door from either direction. Such deactivation should last for no more than 15 seconds. The deactivation touchpads or switches should be located at least 54 inches above the threshold of the door.

(b) The pool should be equipped with a power safety cover which complies with ASTM F1346-91 listed below.

(c) Other means of protection, such as self-closing doors with self-latching devices, are acceptable so long as the degree of protection afforded is not less than the protection afforded by (a) or (b) described above.

10. Where an aboveground pool structure is used as a barrier or where the barrier is mounted on top of the pool structure, and the means of access is a ladder or steps, then (a) the ladder to the pool or steps should be capable of being secured, locked or removed to prevent access, or (b) the ladder or steps should be surrounded by a barrier. When the ladder or steps are secured, locked, or removed, any opening created should not allow the passage of a 4-inch diameter sphere.
Barriers should be located so as to prohibit permanent structures, equipment or similar objects from being used to climb the barriers.

PARTS REFERENCE

Before assembling your product, please take a few minutes to check the contents and become familiar with all the parts.

For Pools with Dual Suction Outlets Configuration:
In order to comply with the requirement of the Virginia Grahame Baker Act (for USA and Canada), your pool is designed with dual suction outlets and one inlet fittings. Overview of the dual suction outlets configuration is as follow:

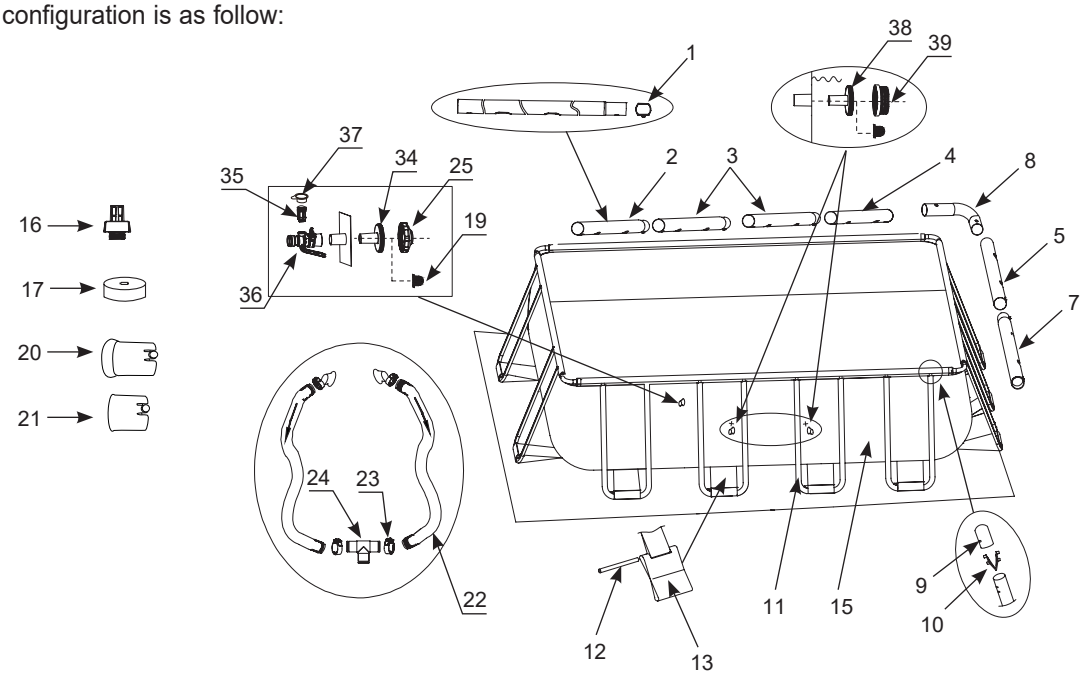

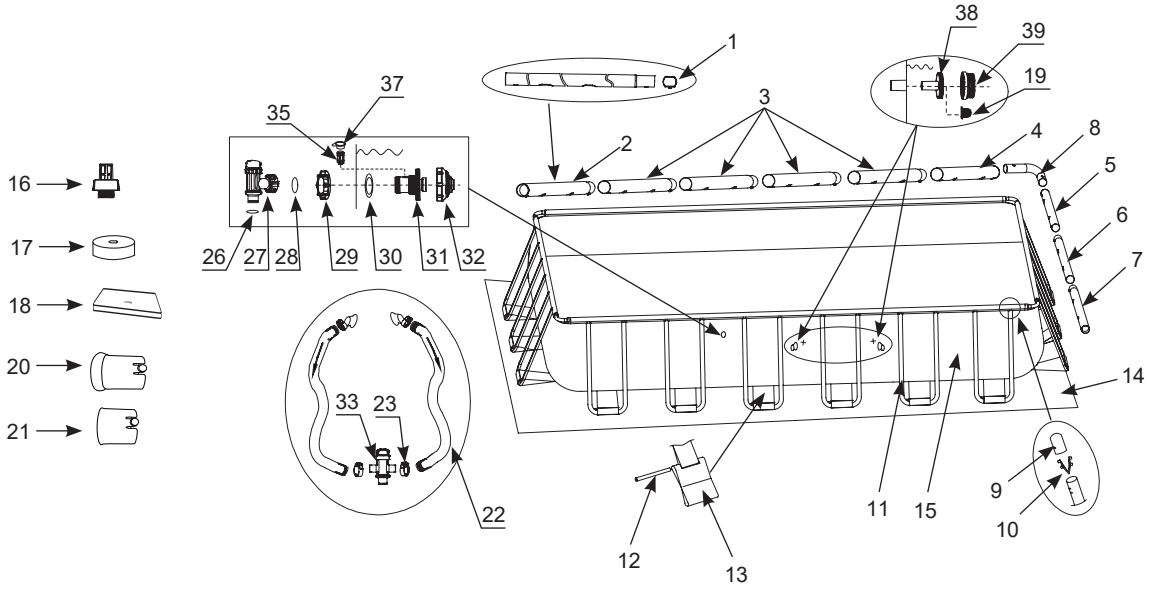

NOTE: Drawings for illustration purpose only. Actual product may vary. Not to scale.

PARTS REFERENCE

Before assembling your product, please take a few minutes to check the contents and become familiar with all the parts.

REF. NO.	DESCRIPTION	POOL SIZE & QUANTITIES			
		15' x 9' (457cm x 274cm)	18' x 9' (549cm x 274cm)	24' x 12' (732cm x 366cm)	32' x 16' (975cm x 488cm)
1	SINGLE BUTTON SPRING	8	8	14	20
2	HORIZONTAL BEAM (A) (SINGLE BUTTON SPRING INCLUDED)	2	2	2	2
3	HORIZONTAL BEAM (B) (SINGLE BUTTON SPRING INCLUDED)	4	4	8	12
4	HORIZONTAL BEAM (C)	2	2	2	2
5	HORIZONTAL BEAM (D) (SINGLE BUTTON SPRING INCLUDED)	2	2	2	2
6	HORIZONTAL BEAM (E) (SINGLE BUTTON SPRING INCLUDED)	-	-	2	4
7	HORIZONTAL BEAM (F)	2	2	2	2
8	CORNER JOINT	4	4	4	4
9	U-SUPPORT END CAP	24	24	36	48
10	DOUBLE BUTTON SPRING CLIP	24	24	36	48
11	U-SHAPED SIDE SUPPORT (U-SUPPORT END CAP & DOUBLE BUTTON SPRING CLIP INCLUDED)	12	12	18	24
12	CONNECTING ROD	12	12	18	24
13	RESTRAINER STRAP	12	12	18	24
14	GROUND CLOTH	1	1	1	1
15	POOL LINER (DRAIN VALVE CAP INCLUDED)	1	1	1	1
16	DRAIN CONNECTOR	1	1	1	1
17	DRAIN VALVE CAP	2	2	2	2
18	POOL COVER	1	1	1	1
19	STRAINER HOLE PLUG	2	2	2	2
20	PLASTIC INSERT FOR CORNER JOINT	8	8	8	8
21	PLASTIC INSERT FOR HORIZONTAL CORNER PIPE	8	8	8	8
22	HOSE	2	2	2	2
23	HOSE CLAMP	4	4	4	4
24	HOSE T-JOINT	-	-	-	-
25	POOL INLET JET NOZZLE	-	-	-	-
26	HOSE O-RING	1	1	1	1
27	PLUNGER VALVE (HOSE O-RING & STEP WASHER INCLUDED)	1	1	1	1
28	STEP WASHER	1	1	1	1
29	STRAINER NUT	1	1	1	1
30	FLAT STRAINER RUBBER WASHER	1	1	1	1
31	INLET THREADED AIR CONNECTOR +	1	1	1	1
32	ADJUSTABLE POOL INLET JET NOZZLE	1	1	1	1
33	SPLIT HOSE PLUNGER VALVE	1	1	1	1
34	INLET STRAINER CONNECTOR	-	-	-	-
35	AIR JET VALVE	1	1	1	1
36	POOL INLET AIR ADAPTOR +	-	-	-	-
37	AIR JET VALVE CAP	1	1	1	1
38	STRAINER CONNECTOR	2	2	2	2
39	STRAINER GRID	2	2	2	2

+ If applicable, depending on the size of the filter pump fitted with your pool, you must quote the model number shown on the filter pump housing to order the correct size of **"Pool Inlet Air Adaptor"** or **"Inlet Threaded Air Connector"** replacement part.

PARTS REFERENCE

Before assembling your product, please take a few minutes to check the contents and become familiar with all the parts.

REF. NO.	DESCRIPTION	15' x 9' x 48'' (457cm x 274cm x 122cm)	18' x 9' x 52'' (549cm x 274cm x 132cm)	24' x 12' x 52'' (732cm x 366cm x 132cm)	32' x 16' x 52'' (975cm x 488cm x 132cm)
		SPARE PART NO.			
1	SINGLE BUTTON SPRING	10381	10381	10381	10381
2	HORIZONTAL BEAM (A) (SINGLE BUTTON SPRING INCLUDED)	11524A	10919A	10920A	10921A
3	HORIZONTAL BEAM (B) (SINGLE BUTTON SPRING INCLUDED)	11525A	10922A	10923A	10924A
4	HORIZONTAL BEAM (C)	11526A	10925A	10926A	10927A
5	HORIZONTAL BEAM (D) (SINGLE BUTTON SPRING INCLUDED)	10928A	10928A	10929A	10928A
6	HORIZONTAL BEAM (E) (SINGLE BUTTON SPRING INCLUDED)	-	-	10930A	10931A
7	HORIZONTAL BEAM (F)	10932A	10932A	10933A	10932A
8	CORNER JOINT	10934A	10934A	10934A	10934A
9	U-SUPPORT END CAP	10935	10935	10935	10935
10	DOUBLE BUTTON SPRING CLIP	10936	10936	10936	10936
11	U-SHAPED SIDE SUPPORT (U-SUPPORT END CAP & DOUBLE BUTTON SPRING CLIP INCLUDED)	11523A	10937A	10937A	10937A
12	CONNECTING ROD	10383	10383	10383	10383
13	RESTRAINER STRAP	10938A	10938A	10938A	10938A
14	GROUND CLOTH	11521	10759	18941	10760
15	POOL LINER (DRAIN VALVE CAP INCLUDED)	12444E	12445E	12446E	12447E
16	DRAIN CONNECTOR	10184	10184	10184	10184
17	DRAIN VALVE CAP	11044	11044	11044	11044
18	POOL COVER	11522	10756	18936	10757
19	STRAINER HOLE PLUG	10127	10127	10127	10127
20	PLASTIC INSERT FOR CORNER JOINT	11156	11156	11156	11156
21	PLASTIC INSERT FOR HORIZONTAL CORNER PIPE	11157	11157	11157	11157
22	HOSE	11873	11873	11873	11873
23	HOSE CLAMP	10122	10122	10122	10122
24	HOSE T-JOINT	-	-	-	-
25	POOL INLET JET NOZZLE	-	-	-	-
26	HOSE O-RING	10262	10262	10262	10262
27	PLUNGER VALVE (HOSE O-RING & STEP WASHER INCLUDED)	10747	10747	10747	10747
28	STEP WASHER	10745	10745	10745	10745
29	STRAINER NUT	10256	10256	10256	10256
30	FLAT STRAINER RUBBER WASHER	10255	10255	10255	10255
31	INLET THREADED AIR CONNECTOR +	12371 12372	12371 12372	12371 12372	12371 12372
32	ADJUSTABLE POOL INLET JET NOZZLE	12369	12369	12369	12369
33	SPLIT HOSE PLUNGER VALVE	11872	11872	11872	11872
34	INLET STRAINER CONNECTOR	-	-	-	-
35	AIR JET VALVE	12363	12363	12363	12363
36	POOL INLET AIR ADAPTOR +	-	-	-	-
37	AIR JET VALVE CAP	12373	12373	12373	12373
38	STRAINER CONNECTOR	11070	11070	11070	11070
39	STRAINER GRID	11072	11072	11072	11072

+ If applicable, depending on the size of the filter pump fitted with your pool, you must quote the model number shown on the filter pump housing to order the correct size of **"Pool Inlet Air Adaptor"** or **"Inlet Threaded Air Connector"** replacement part.

Non-USA & Canada:

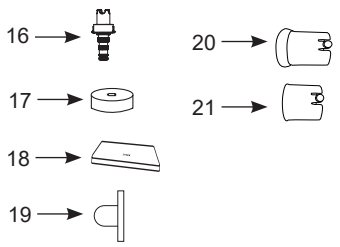

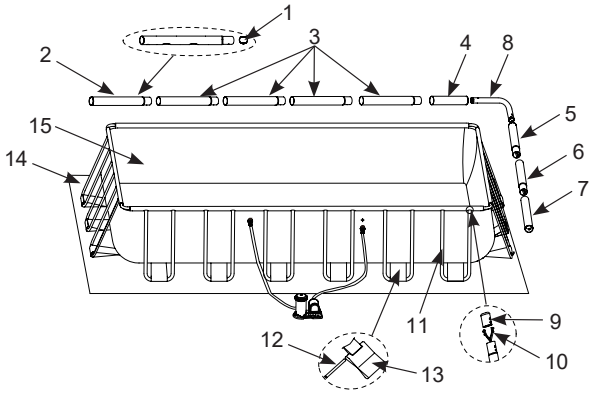

NOTE: Drawings for illustration purpose only. Actual product may vary. Not to scale.

REF. NO.	DESCRIPTION	POOL SIZE & QUANTITIES			
		15' x 9' (457cm x 274cm)	18' x 9' (549cm x 274cm)	24' x 12' (732cm x 366cm)	32' x 16' (975cm x 488cm)
1	SINGLE BUTTON SPRING	8	8	14	20
2	HORIZONTAL BEAM (A) (SINGLE BUTTON SPRING INCLUDED)	2	2	2	2
3	HORIZONTAL BEAM (B) (SINGLE BUTTON SPRING INCLUDED)	4	4	8	12
4	HORIZONTAL BEAM (C)	2	2	2	2
5	HORIZONTAL BEAM (D) (SINGLE BUTTON SPRING INCLUDED)	2	2	2	2
6	HORIZONTAL BEAM (E) (SINGLE BUTTON SPRING INCLUDED)	-	-	2	4
7	HORIZONTAL BEAM (F)	2	2	2	2
8	CORNER JOINT	4	4	4	4
9	U-SUPPORT END CAP	24	24	36	48
10	DOUBLE BUTTON SPRING CLIP	24	24	36	48
11	U-SHAPED SIDE SUPPORT (U-SUPPORT END CAP & DOUBLE BUTTON SPRING CLIP INCLUDED)	12	12	18	24
12	CONNECTING ROD	12	12	18	24
13	RESTRAINER STRAP	12	12	18	24
14	GROUND CLOTH	1	1	1	1
15	POOL LINER (DRAIN VALVE CAP INCLUDED)	1	1	1	1
16	DRAIN CONNECTOR	1	1	1	1
17	DRAIN VALVE CAP	2	2	2	2
18	POOL COVER	1	1	1	1
19	STRAINER HOLE PLUG	-	-	-	-
20	PLASTIC INSERT FOR CORNER JOINT	8	8	8	8
21	PLASTIC INSERT FOR HORIZONTAL CORNER PIPE	8	8	8	8

REF. NO.	DESCRIPTION	15' x 9' x 48'' (457cm x 274cm x 122cm)	18' x 9' x 52'' (549cm x 274cm x 132cm)	24' x 12' x 52'' (732cm x 366cm x 132cm)	32' x 16' x 52'' (975cm x 488cm x 132cm)
		SPARE PART NO.			
1	SINGLE BUTTON SPRING	10381	10381	10381	10381
2	HORIZONTAL BEAM (A) (SINGLE BUTTON SPRING INCLUDED)	11524A	10919A	10920A	10921A
3	HORIZONTAL BEAM (B) (SINGLE BUTTON SPRING INCLUDED)	11525A	10922A	10923A	10924A
4	HORIZONTAL BEAM (C)	11526A	10925A	10926A	10927A
5	HORIZONTAL BEAM (D) (SINGLE BUTTON SPRING INCLUDED)	10928A	10928A	10929A	10928A
6	HORIZONTAL BEAM (E) (SINGLE BUTTON SPRING INCLUDED)	-	-	10930A	10931A
7	HORIZONTAL BEAM (F)	10932A	10932A	10933A	10932A
8	CORNER JOINT	10934A	10934A	10934A	10934A
9	U-SUPPORT END CAP	10935	10935	10935	10935
10	DOUBLE BUTTON SPRING CLIP	10936	10936	10936	10936
11	U-SHAPED SIDE SUPPORT (U-SUPPORT END CAP & DOUBLE BUTTON SPRING CLIP INCLUDED)	11523A	10937A	10937A	10937A
12	CONNECTING ROD	10383	10383	10383	10383
13	RESTRAINER STRAP	10938A	10938A	10938A	10938A
14	GROUND CLOTH	11521	10759	18941	10760
15	POOL LINER (DRAIN VALVE CAP INCLUDED)	12444A	12445A	12446A	12447A
16	DRAIN CONNECTOR	10201	10201	10201	10201
17	DRAIN VALVE CAP	11044	11044	11044	11044
18	POOL COVER	11522	10756	18936	10757
19	STRAINER HOLE PLUG	10127	10127	10127	10127
20	PLASTIC INSERT FOR CORNER JOINT	11156	11156	11156	11156
21	PLASTIC INSERT FOR HORIZONTAL CORNER PIPE	11157	11157	11157	11157

POOL SETUP

IMPORTANT SITE SELECTION AND GROUND PREPARATION INFORMATION

⚠ WARNING

- **The pool location must allow you to secure all doors, windows, and safety barriers to prevent unauthorized, unintentional or unsupervised pool entry.**
- **Install a safety barrier that will eliminate access to the pool for young children and pets.**
- **Failure to set up the pool on flat, level, compact ground and to assemble and fill with water in accordance with the following instructions could result in the pool's collapse or the possibility that a person lounging in the pool could be swept out/ejected, resulting in serious injury or property damage.**
- **Risk of electric shock: connect the filter pump only to a grounding type receptacle protected by a ground-fault circuit interrupter (GFCI). To reduce the risk of an electrical shock, do not use extension cords, timers, plug adapters or converter plugs to connect the pump to an electrical supply. Always provide a properly located outlet. Locate the cord where it cannot be damaged by lawn mowers, hedge trimmers, and other equipment. See the filter pump manual for additional warnings and instructions.**
- **Risk of serious injury: do not attempt to assemble pool in high wind conditions.**

Select an outdoor location for the pool with the following requirements in mind:

1. The area where the pool is to be set up must be **absolutely flat and level.** Do not set up the pool on a slope or inclined surface.
2. The ground surface must be compacted and firm enough to withstand the pressure and weight of a fully set up pool. **Do Not** set up the pool on mud, sand, soft or loose soil conditions.
3. Do not set up the pool on a deck, balcony or platform, which may collapse under the weight of the filled pool.
4. The pool requires at least 5 - 6 feet (1.5 - 2.0m) of space all around pool from objects that a child could climb on to gain access to the pool.
5. Grass under the pool will be damaged. Splash out chlorinated pool water could damage the surrounding vegetation.
6. If the ground is not concrete (i.e., if it is asphalt, lawn or earth) you must place a piece of pressure-treated wood, size 15" x 15" x 1.2" (38 x 38 x 3cm), under each U-shaped support and set **flush** or even with the ground. Alternatively you may use steel pads or reinforced concrete slabs. Consult your local pool supply retailer for advice on support pads.
   NOTE: Do not use support pads or slabs with slippery, smooth surfaces as the U-shaped side support will slide outward causing damage to the pool and void the warranty.
7. Above ground storable pools shall be located at a minimum distance of 6 ft (1.83 meters) from any receptacle, and that all 125-volt 15- and 20-ampere receptacles located within 20 ft (6.0 meters) of the pool shall be protected by a ground fault circuit interrupter (GFCI), where distances are by measuring the shortest path the supply cord of an appliance connected to the receptacle would follow without piercing a floor, wall, ceiling, doorway with hinged or sliding door, window opening, or other effective permanent barrier.
8. Eliminate all aggressive grasses first. Certain types of grass such as St. Augustine and Bermuda, may grow through the liner. Grass growing through the liner it is not a manufacture defect and is not covered under warranty.
9. The area shall facilitate drainage of the pool water after each use and/or for long term pool storage.

POOL SETUP (continued)

You may have purchased this pool with the Intex Krystal Clear™ filter pump. The pump has its own separate set of installation instructions. First assemble your pool unit and then set up the filter pump.

Estimated assembly time 60~90 minutes. (Note the assembly time is only approximate and individual assembly experience may vary.)

1.
- Find a flat, level location that is free and clear of stones, branches or other sharp objects that may puncture the pool liner or cause injury.
- Open the carton containing the liner, joints, legs, etc., very carefully as this carton can be used to store the pool during the winter months or when not in use.
- Remove the ground cloth **(14)** from carton. Spread it out completely with its edges being at least 5 - 6' (1.5 - 2.0m) from any obstacle such as walls, fences, trees, etc. Remove the liner **(15)** from carton and spread it out over the ground cloth with the drain valve towards the draining area. Place the drain valve away from the house. Open it up to warm it in the sun. This warming will make installation easier. Make sure the liner is centered atop the ground cloth. Be sure to face the end with the 2 hose connectors towards the electrical power source.
  IMPORTANT: Do not drag the liner across the ground as this can cause liner damage and pool leakage (see drawing 1).
- During the set-up of this pool liner, point the hose connections or openings in the direction of the electric power source. The outer edge of the assembled pool to be within reach of the electrical connection for the optional filter pump.

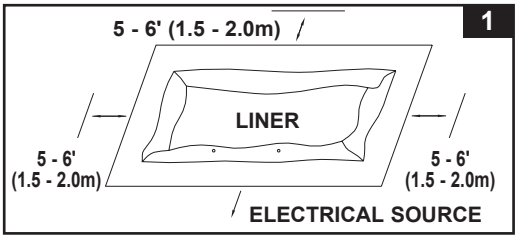

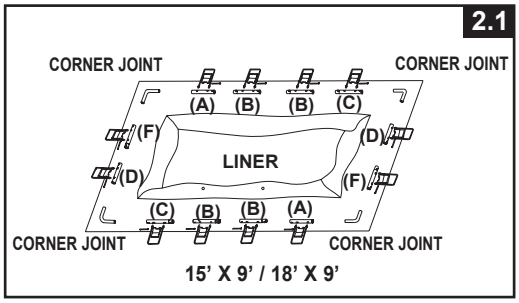

2. Remove all the parts from the carton(s) and place them on the ground in the location where they are to be assembled. Check the parts listing and be sure all the pieces to be assembled are accounted for **(see drawings 2.1-2.3)**.
IMPORTANT: Do not start assembly if any pieces are missing. For replacement pieces call the Consumer Service telephone number in your area.
After all pieces are accounted for move the pieces away from the liner for of installation.
NOTE: Sprinkle some talcum powder over the horizontal beams before sliding them into the pool liner sleeve. This will make removal of the beams from the liner easier during the disassembly of the pool.

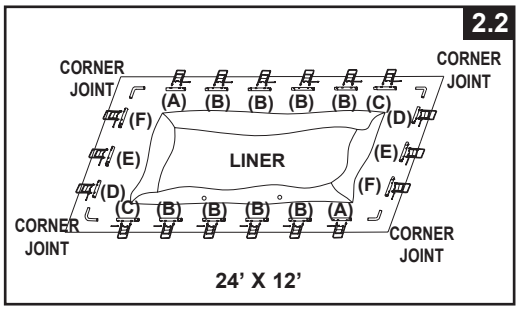

POOL SETUP (continued)

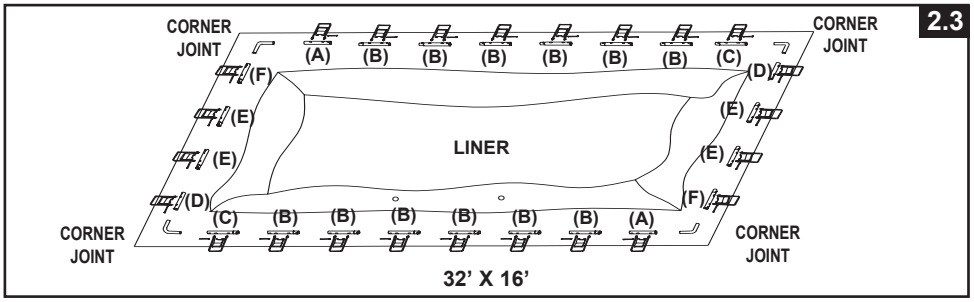

3. Be sure the liner is opened and spread out to its fullest extent on top of the ground cloth. Starting with one side, slide the "A" beams first into the sleeve openings located in each corner. Continue with "B" beam snapping into the "A" beam, and another "C" beam snapping into the "B" beam **(see drawing 3)**.

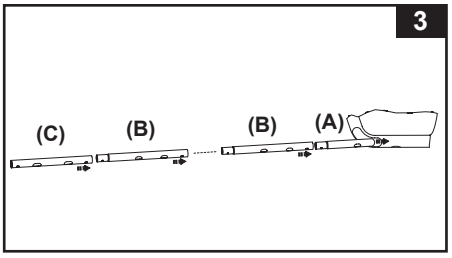

Keep the metal beam holes aligned with the white liner sleeve holes.

Continue inserting all "A-B-C & D-E-F" beams into the sleeve openings. Start the "D-E-F" combination for pool's short sides by inserting the "D" beam first into the opening.

The combinations for beams are different for different sizes of pools, see the chart below for detail. (Be sure all 4 sides end up with the metal beam holes aligned with the white liner sleeve holes.)

Size of Pool	No. of "U-shape" Leg on longer side	No. of "U-shape" Leg on shorter side	Horizontal Beam Combinations on longer side	Horizontal Beam Combinations on shorter side
15' x 9' (457cm x 274cm)	4	2	A-B-B-C	D-F
18' x 9' (549cm x 274cm)	4	2	A-B-B-C	D-F
24' x 12' (732cm x 366cm)	6	3	A-B-B-B-B-C	D-E-F
32' x 16' (975cm x 488cm)	8	4	A-B-B-B-B-B-B-C	D-E-E-F

4. Slide the restrainer strap **(13)** onto the large U-shaped side support **(11)**. Repeat for all restrainer straps and U-supports. **IMPORTANT: The liner is to remain flat on the ground during the next step #5. This is why 5 - 6' of clearance space around the pool is necessary (see drawing 4).**

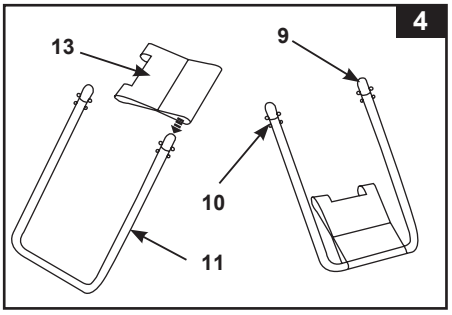

POOL SETUP (continued)

5. The tops of the U-shaped side supports have a double button spring loaded clip **(10)** that is factory pre-installed. Insert the side supports into the "A-B-C & D-E-F" beam holes by squeezing the bottom button inward with your fingers.
Squeezing this bottom button will allow the support to enter the beam. Once the U-support is inside the beam release the finger pressure allowing the support to "SNAP" into place. Repeat this procedure for all U-shaped side supports **(see drawing 5)**.

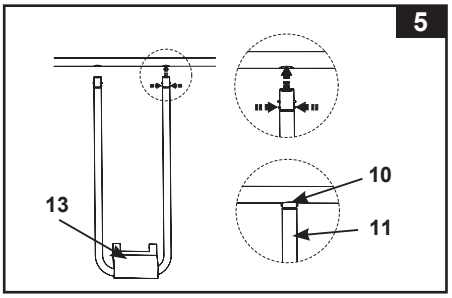

6. With one person standing inside the pool, raise one corner; insert the connecting rod **(12)** into the overlapping openings, to connect the liner straps to the restrainer straps. Repeat the operation in the other corners and then on the sides **(see drawings 6.1 & 6.2)**.

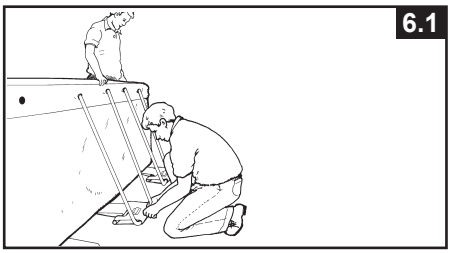

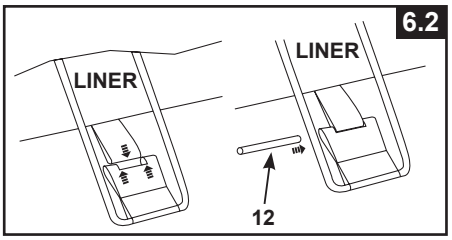

7. Pull the bottoms of the side supports out away from the liner to make the straps taut. Repeat for all locations **(see drawing 7)**.

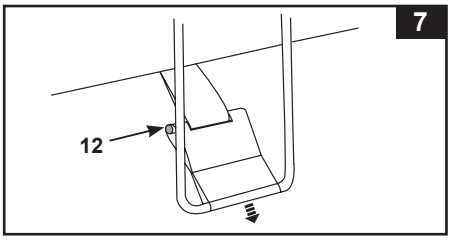

8. If the ground is not concrete (asphalt, lawn or earth) you must place a piece of pressure-treated wood, size 15" x 15" x 1.2", under each leg and set flush with the ground. The U-shaped side supports must be placed in the center of the pressure-treated wood and with the wood grain perpendicular to the support leg **(see drawing 8)**.
NOTE: Make sure each support pad is recessed and set flush with the ground and not just placed on the ground. Do not use support pads or slabs with slippery, smooth surfaces as the U-shaped side support will slide outward causing damage to the pool and void the warranty.

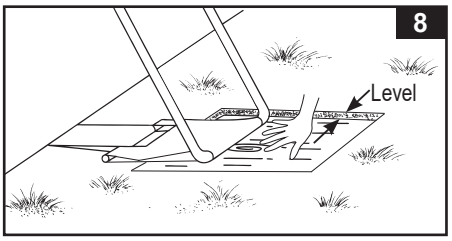

POOL SETUP (continued)

9. Position the long wall top rails so they are leaning over the short wall top rails. Installe the corner joints **(8)** at the 4 corners **(see drawing 9)**.
IMPORTANT: The four corner joints are designed to be moveable relative to the horizontal beams and not fixed to the horizontal beams. This allows the pool side walls to move inward or outward when the pool is in use.

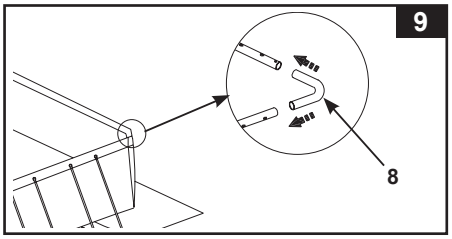

10. Assemble the ladder. The ladder has separate assembly instructions in the ladder box.

11. Place the assembled ladder over one of the sides with one of the liner installation team members entering the pool to smooth out all bottom liner wrinkles. While inside the pool this team member should check the 2 drain valves (in corners) to be sure the inside drain plug is inserted into the valve. This team member should push each inside corner in an outward direction.

12. Before filling the pool with water, ensure that the drain plug inside the pool is closed and that the drain cap on the outside is screwed on tightly. Fill the pool with no more than 1 inch (2.5 cm) of water. Check to see whether the water is level.

IMPORTANT: If the water in the pool flows to one side, the pool is not completely level. Setting up the pool on unleveled ground will cause the pool to tilt resulting in the sidewall material to bulge. If the pool is not completely level, you must drain the pool, level the area and re-fill the pool.

Smooth out the remaining wrinkles (from inside pool) by pushing out where the pool floor and pool sides meet. Or (from outside pool) reach under the side of the pool, grasp the pool floor and pull it out. If the ground cloth is causing the wrinkles, have 2 people pull from either side to remove all wrinkles.

13. Fill the pool with water up to just below the sleeve line **(see drawing 10)**.
NOTE: The pool side walls and frame structure will lean inward after having been filled with water to the recommended level. Do not be concerned by the inward leaning of the side walls, this is to accommodate the water movement and pressure when the pool is in use.

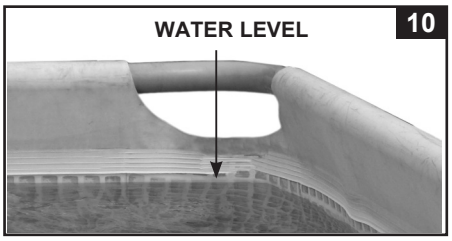

14. Posting aquatic safety signs
Select a highly visible area near the pool to post the Danger No Diving or Jumping sign included later in this manual.

IMPORTANT

Before allowing anyone to use the pool, hold a family meeting. Establish a set of rules that include, at a minimum, the important safety rules and general aquatic safety information in this manual. Review these rules on a regular basis and with all users of the pool, including guests.

GENERAL AQUATIC SAFETY

Water recreation is both fun and therapeutic. However, it involves inherent risks of injury and death. To reduce your risk of injury, read and follow all product, package and package insert warnings and instructions. Remember, however, that product warnings, instructions and safety guidelines cover some common risks of water recreation, but do not cover all risks and dangers.

Assign an adult to be responsible for watching children in the pool. Give this person a "water watcher" tag and ask that they wear it the entire time they are in charge of supervising children in the pool. If they need to leave for any reason, ask this person to pass the "water watcher" tag and the supervision responsibility to another adult.

For additional safeguards, also familiarize yourself with the following general guidelines as well as guidelines provided by nationally recognized Safety Organizations:

- Demand constant supervision. A competent adult should be appointed as a "lifeguard" or water watcher, especially when children are in and around the pool.
- Learn to swim.
- Take the time to learn CPR and first aid.
- Instruct anyone who is supervising pool users about potential pool hazards and about the use of protective devices such as locked doors, barriers, etc.
- Instruct all pool users, including children what to do in case of an emergency.
- Always use common sense and good judgement when enjoying any water activity.
- Supervise, supervise, supervise.

For additional information on safety, please visit

- **The Association of Pool and Spa Professionals: The Sensible Way to Enjoy Your Aboveground/Onground Swimming Pool www.nspi.org**
- **American Academy of Pediatrics: Pool Safety for Children www.aap.org**
- **Red Cross www.redcross.org**
- **Safe Kids www.safekids.org**
- **Home Safety Council: Safety Guide www.homesafetycouncil.org**
- **Toy Industry Association: Toy Safety www.toy-tia.org**

SAFETY IN YOUR POOL

Safe swimming depends on constant attention to the rules. You may also wish to copy and laminate the sign for protection from the elements. You can also download and print additional copies of the warning sign and water watcher tags at www.intexcorp.com.

POOL MAINTENANCE & CHEMICALS

⚠ WARNING

REMEMBER TO

- **Protect all pool occupants from possible water-related illnesses by keeping the pool water clean and sanitized. Do not swallow the pool water. Always practice good hygiene.**
- **Keep your pool clean and clear. The pool floor must be visible at all times from the outside barrier of the pool.**
- **Keep children away from pool covers to avoid entanglement, drowning, or other serious injury.**

Water maintenance

The maintenance of a proper water balance through appropriate use of sanitizers is the single most important factor in maximizing the life and appearance of the liner as well as ensuring clean, healthy and safe water. Proper technique is important for water testing and treating the pool water. See your pool professional for chemical, test kits and testing procedures. Be sure to read and follow the written instructions from the chemical manufacturer.

1. Never let chlorine come into contact with the liner if it is not completely dissolved. Dissolve granular or tablet chlorine first in a bucket of water, then add it to the pool water. Likewise with liquid chlorine; mix it immediately and thoroughly with the pool water.
2. Never mix chemicals together. Add the chemicals to the pool water separately. Thoroughly dissolve each chemical before adding another one to the water.
3. An Intex pool skimmer and an Intex pool vacuum are available to assist in maintaining clean pool water. See your pool dealer for these pool accessories.
4. Do not use a pressure washer to clean the pool.

⚠ CAUTION

ALWAYS FOLLOW THE CHEMICAL MANUFACTURER'S DIRECTIONS, AND THE HEALTH AND HAZARD WARNINGS.

Do not add chemicals if the pool is occupied. This can cause skin or eye irritation. Concentrated chlorine solutions can damage the pool liner. In no event is Intex Recreation Corp., Intex Development Co. Ltd., their related companies, authorized agents and service centers, retailers or employees liable to the buyer or any other party for costs associated with the loss of pool water, chemicals or water damage. **Keep spare filter cartridges on hand. Replace cartridges every two weeks.** We recommend the use of a Krystal Clear™ Intex Filter Pump with all of our above-ground-pools. **To purchase an Intex Filter Pump or other accessories see your local retailer, visit our website or call the Intex Consumer Services Department listed in the separate "Authorized Service Centers" sheet and have your Visa or Mastercard ready.**

EXCESSIVE RAIN: To avoid damage to the pool and over filling, immediately drain rain water that causes the water level to be higher than the maximum.

WINTER PREPARATIONS

Winterizing your Above Ground Pool

At the end of the pool season, you can choose to drain and disassemble the pool for storage, or leave it assembled while following these winterization instructions. Leaving it assembled for winterization will conserve water, reduce the risk of liner damage during disassembly, and help prevent ice damage to the pool and its accessories. Disassembly and storage will free the space up for other uses.

Winterization Steps

You will first need to disconnect and drain the filtration system, removing the hoses, ladder and all accessories from the pool. Properly store them when the temperature drops below 32°F (0°C) to prevent ice damage to the filter pump and accessories.

Prepare the pool for the winter as follows:

1. Filter and clean the pool water thoroughly and balance the pool chemicals. Leave the clean water in the pool.
2. Remove any accessories (such as skimmer, sprayer) attached to the threaded strainer connector. Replace the strainer grid if necessary. Be sure all the accessories are clean and completely dry before storage.
3. Plug the inlet and outlet fitting from the inside of the pool with the plug provided **(19)** or close the plunger valves.
4. Remove the ladder (if applicable) and store in a safe place. Be sure the ladder is completely dry before storage.
5. Remove the hoses that connect the filter pump to the pool.
6. Add the appropriate chemicals for the winter period. Consult your local pool dealer as to which chemicals you should use and how to use them. This can vary greatly by region.
7. Cover the pool with an Intex Pool Cover or a winter pool cover from your local pool dealer. Depending on the severity of your winter weather, it is recommended to add an air pillow to the center of the pool before adding the cover. The pool pillow will help absorb the expansion of the pool water when it freezes and will alleviate pressure on the cover from snow accumulation.

   <u>IMPORTANT NOTE:</u> INTEX POOL COVER IS NOT A SAFETY COVER. THE POOL LINER MAY BECOME STIFF WHEN THE TEMPERATURE DROPS BELOW 32°F (0°C) - NEVER STRIKE, HIT, OR IMPACT THE POOL LINER.
8. Clean and drain the pump, filter housing and hoses. Remove and discard the old filter cartridge. Keep a spare cartridge for the next season.
9. Bring the filter pump and accessories indoors and store in a safe and dry area, preferably between 32 degrees Fahrenheit (0 degrees Celsius) and 104 degrees Fahrenheit (40 degrees Celsius).

LONG TERM STORAGE & DRAINAGE

If you plan not to use the pool for an extended period of time—to free up space, move to avoid hazardous weather conditions, etc.—follow the instructions below to drain your pool and set up long-term storage.

1. Check local regulations for specific directions regarding disposal of swimming pool water.
2. Check to make sure that the drain plug inside the pool is plugged in place.
3. Remove the cap from the drain valve on the outside pool wall.
4. Attach the female end of the garden hose to the drain connector **(16)**.
5. Place the other end of the hose in an area where the water can be safely drained away from the house and other nearby structures.
6. Attach the drain connector to the drain valve. **NOTE: The drain connector will push the drain plug open inside the pool and water will start to drain immediately.**
7. When the water stops draining, start lifting the pool from the side opposite the drain, leading any remaining water to the drain and emptying the pool completely.
8. Disconnect hose and adapter when finished.
9. Re-insert drain plug in drain valve on inside of pool for storage.
10. Replace drain cap on outside of pool.
11. Reverse the set-up instructions to disassemble the pool, and remove all connecting parts.
12. Be sure that the pool and all parts are completely dry before storage. Air dry the liner in the sun until completely dry before folding **(see drawing 11)**. Sprinkle some talcum powder to prevent vinyl from sticking together and to absorb any residual moisture.
13. Create rectangular shape. Starting at one side, fold one-sixth of liner in on itself twice. Do the same on the opposite side **(see drawings 12.1 & 12.2)**.
14. Once you have created two opposing folded sides, simply fold one over the other like closing a book **(see drawings 13.1 & 13.2)**.
15. Fold the two long ends to the middle **(see drawing 14)**.
16. Fold one over the other like closing a book and finally compact the liner **(see drawing 15)**.
17. Safely store the empty pool in such a way that it does not collect water from rain or any other source, and to prevent from being blown away by strong wind. Store the liner and accessories in a dry, temperature controlled, between 32 degrees Fahrenheit (0 degrees Celsius) and 104 degrees Fahrenheit (40 degrees Celsius), storage location.
18. The original packing can be used for storage.

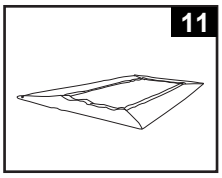

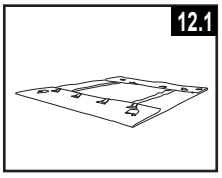

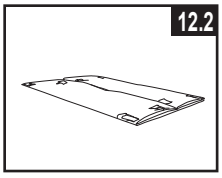

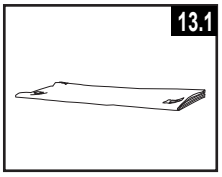

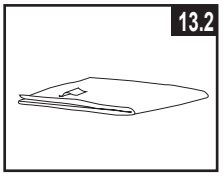

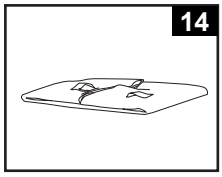

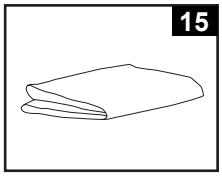

TROUBLESHOOTING

PROBLEM	DESCRIPTION	CAUSE	SOLUTION
ALGAE	• Greenish water. • Green or black spots on pool liner. • Pool liner is slippery and/or has a bad odor.	• Chlorine and pH level need adjustment.	• Super chlorinate with shock treatment. Correct pH to your pool store's recommended level. • Vacuum pool bottom. • Maintain proper chlorine level.
COLORED WATER	• Water turns blue, brown, or black when first treated with chlorine.	• Copper, iron or manganese in water being oxidized by the added chlorine.	• Adjust pH to recommended level. • Run filter until water is clear. • Replace cartridge frequently.
FLOATING MATTER IN WATER	• Water is cloudy or milky.	• "Hard water" caused by a too high pH level. • Chlorine content is low. • Foreign matter in water.	• Correct the pH level. Check with your pool dealer for advice. • Check for proper chlorine level. • Clean or replace your filter cartridge.
CHRONIC LOW WATER LEVEL	• Level is lower than on previous day.	• Rip or hole in pool liner or hoses.	• Repair with patch kit. • Finger tighten all caps. • Replace the hoses.
SEDIMENT ON POOL BOTTOM	• Dirt or sand on pool floor.	• Heavy use, getting in and out of pool.	• Use Intex pool vacuum to clean bottom of pool.
SURFACE DEBRIS	• Leaves, insects etc.	• Pool too close to trees.	• Use Intex pool skimmer.

PROBLEM	CAUSE	SOLUTION
POOL INLET AIR ADAPTOR LEAKING	• Hose clamps are not well-fitted.	• Tighten or reinstall hose clamps.
INLET TREADED AIR CONNECTOR LEAKING	• Plunger valve not well-fitted.	• Tighten or reinstall plunger valve.
AIR JET VALVE LEAKING	• Air jet valve is not tight and facing up. • Air jet valve internal seal blocked. • Air jet valve internal seal dirty. • Air jet valve broken.	• Tighten air jet valve and make sure it's facing up. • Turn ON or plug in the pump and run for few seconds, then turn OFF or unplug, repeat 3 times. • Remove air jet valve, flush dirt out with water and replace valve back. • Replace a new air jet valve.
SMALL LEAK FROM AIR JET VALVE WHEN PUMP IS ON	• Accessories attached to the water circulation line.	• Remove all the accessories (such as solar mat, auto pool cleaner, LED light) from the water circulation line and place the air jet valve cap **(37)** over the air jet valve **(35)**. Do not cover the air jet valve **(35)** with the valve cap **(37)** under normal situation or when the pump is operating.

LIMITED WARRANTY

Your Intex Pool has been manufactured using the highest quality materials and workmanship. All Intex products have been inspected and found free of defects prior to leaving the factory. This Limited Warranty applies to the Intex Pool only.

The provisions of this Limited Warranty apply only to the original purchaser and is not transferable. This Limited Warranty is valid for the period noted below from the date of the initial retail purchase. Keep your original sales receipt with this manual, as proof of purchase will be required and must accompany warranty claims or the Limited Warranty is invalid.

Pool Liner and Frame Warranty – 2 Years

If you find a manufacturing defect in the Intex Pool during the warranty period, please contact the appropriate Intex Service Center listed in the separate "Authorized Service Centers" sheet. The Service Center will determine the validity of the claim. If the Service Center directs you to return the product, please carefully package the product and send with shipping and insurance prepaid to the Service Center. Upon receipt of the returned product, the Intex Service Center will inspect the item and determine the validity of the claim. If the provisions of this warranty cover the item, the item will be repaired or replaced at no charge.

Any and all disputes regarding the provisions of this Limited Warranty shall be brought before an informal dispute settlement board and unless and until the provisions of these paragraphs are carried forth, no civil action may be instituted. The methods and procedures of this settlement board shall be subject to the rules and regulations set forth by the Federal Trade Commission (F.T.C.). IMPLIED WARRANTIES ARE LIMITED TO THE TERMS OF THIS WARRANTY AND IN NO EVENT SHALL INTEX, THEIR AUTHORIZED AGENTS OR EMPLOYEES BE LIABLE TO THE BUYER OR ANY OTHER PARTY FOR DIRECT OR CONSEQUENTIAL DAMAGES OR LIABILITIES. Some states, or jurisdictions do not allow the exclusion or limitation of incidental or consequential damages, so the above limitation or exclusion may not apply to you.

This Limited Warranty does not apply if the Intex product is subject to negligence, abnormal use or operation, accident, improper operation, improper maintenance or storage, or to damage by circumstances beyond Intex's control, including but not limited to, punctures, tears, abrasions, ordinary wear and tear and damage caused by exposure to fire, flood, freezing, rain, or other external environmental forces. This Limited Warranty applies only to those parts and components sold by Intex. The Limited Warranty does not cover unauthorized alterations, repairs or disassembly by anyone other than Intex Service Center personnel.

DO NOT GO BACK TO THE PLACE OF PURCHASE FOR RETURN OR REPLACEMENT. IF YOU ARE MISSING PARTS OR NEED ASSISTANCE, PLEASE CALL US (FOR U.S. AND CANADIAN RESIDENTS): 1-310-549-8235 OR VISIT OUR WEBSITE: WWW.INTEXCORP.COM.

Proof of Purchase must accompany all returns or the warranty claim will be invalid.