REPAIR SHEET

BRAND		DESCRIPTION
RYOBI		**18 Volt Brushless Hedge Trimmer**
MODEL NO.	MFG. NO.	
P2608VNM	**108648001**	

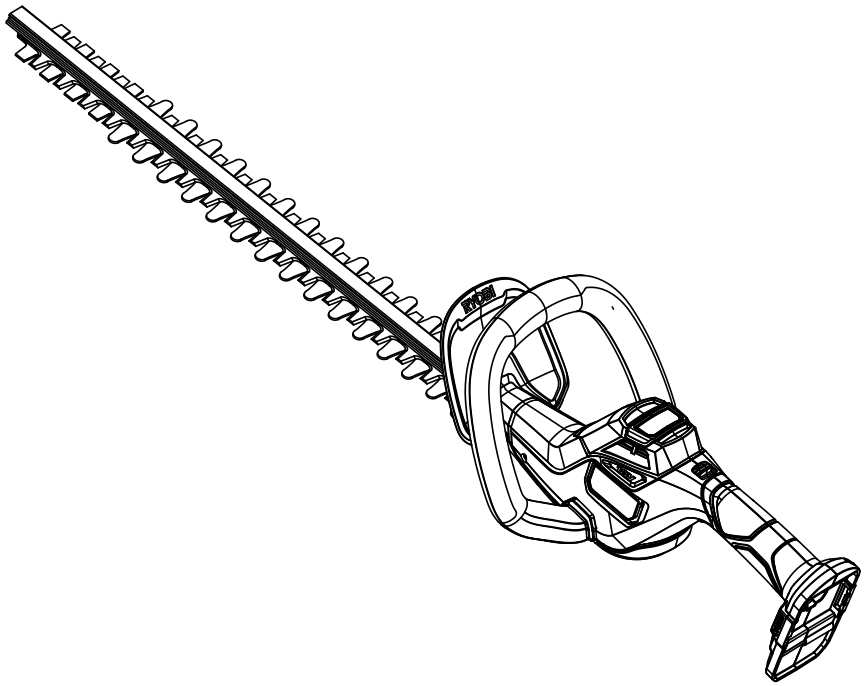

TECHTRONIC INDUSTRIES POWER EQUIPMENT
P.O. Box 1288, Anderson, SC 29622 ■ 1-800-525-2579 ■ **www.ryobitools.com**

9-29-20 (Rev:01)

The model number and manufacturing location will be found on a label attached to the product. Always mention this information in all communications regarding this product and when ordering parts.

RYOBI

P2608VNM

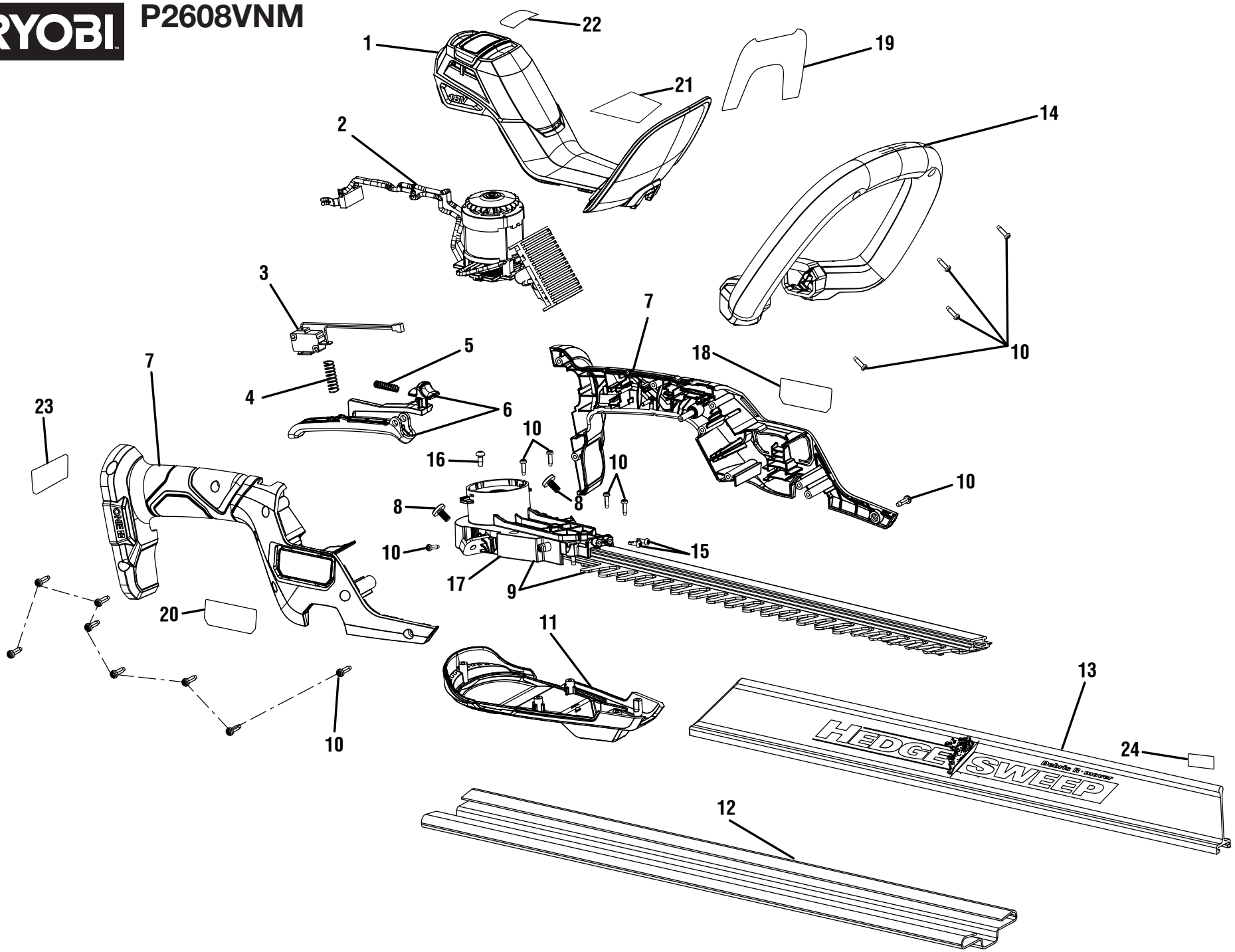

P2608VNM

PARTS LIST

KEY NO.	PART NO.	DESCRIPTION	QTY.
1	205416001	Top Cover Assembly (Inc. Key Nos. 21-22)	1
2	205418001	Motor, Controller, and Battery Holder Assembly	1
3	292266001	Switch Assembly	1
4	679055008	Trigger Spring	1
5	679055010	Lock Button Spring	1
6	205415001	Trigger Assembly	1
7	205414001	Housing Assembly (Inc. Key Nos. 18, 20 & 23)	1
8	660299021	Screw (M5 x 13 mm, Pan Hd.)	2
9	205417001	Gearbox and Blade Assembly (Inc. 5 Key No. 10 and Key No. 17)	1
10	661817002	Screw (M4 x 13.5 mm, T15 Torx Pan Hd.)	18
11	541587001	Gearbox Cover	1
12	525406005	Scabbard	1
13	205419001	Hedge Sweep Assembly (Inc. Key No. 24)	1

KEY NO.	PART NO.	DESCRIPTION	QTY.
14	316916001	Front Handle Assembly (Inc. 4 Key No. 10)	1
15	660005006	Screw (M3 x 10 mm)	2
16	661189001	Screw (M4 x 9 mm, T15 Torx Pan Hd.)	1
17	541588001	Gearbox Housing	1
18	941588704	Logo Label	1
19	941588705	Icon Warning Label (ENG/FR)	1
20	941588707	Data Label	1
21	941588808	Warning Label (SP)	1
22	941588706	Brushless Label	1
23	941588807	Battery Foot Label	1
24	941769001	Hedge Sweep Handle Warning Label	1
	Not Shown:		
	998000352	Operator's Manual	1

RYOBI P2608VNM

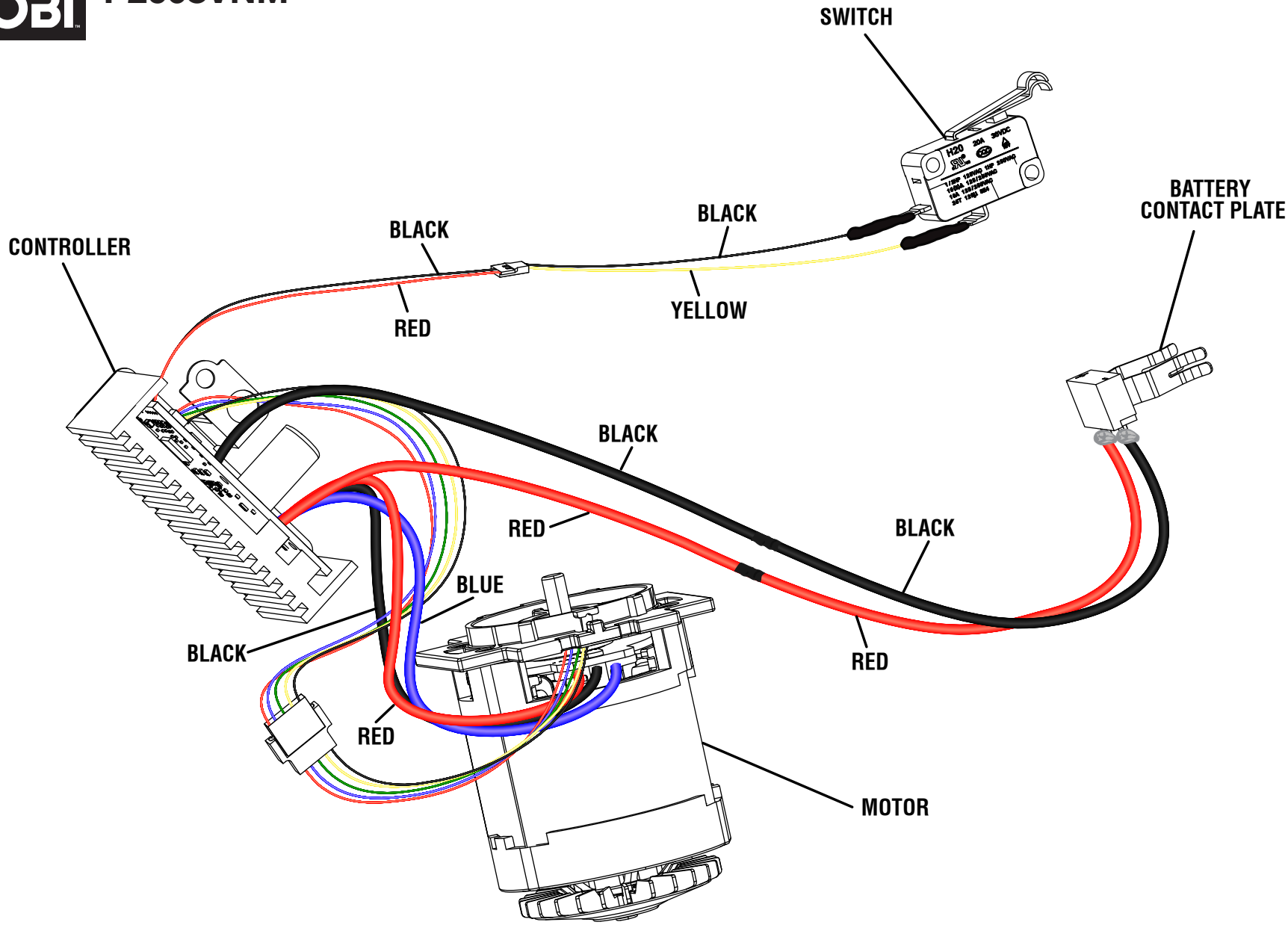

WIRING DIAGRAM