Replacement Parts List

OSWELL 4 IN. CENTERSET SINGLE HANDLE BATHROOM FAUCET

Internet#	MODEL	SKU #	FINISH
333017987	HD67958W-614409	1013270950	Brushed Gold

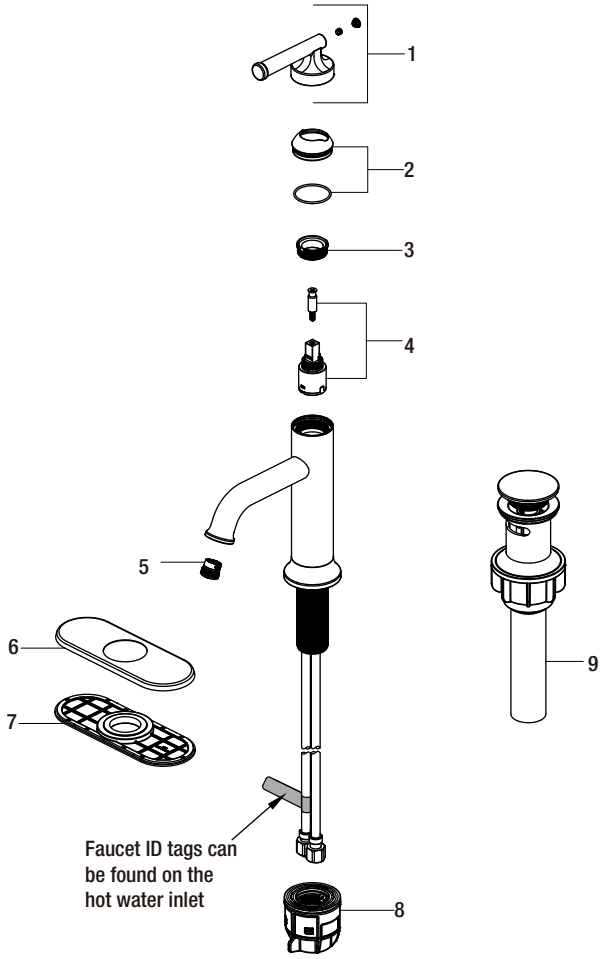

Many replacement parts can be purchased online or at your local store. Please use the table below to identify the part SKU number needed, go to HOMEDEPOT.COM, and check for online and store availability. If you can't find the part you are looking for, please call 1-855-HD-GLACIER.

Part	Description	Part #	Internet SKU #	Store SKU #
1	Handle assembly	RP139864409		
2	Cap & O-ring	RP807674409		
3	Bonnet nut	RP70924		
4	Cartridge & Screw	RP20055		
5	Aerator	RP30187		

Part	Description	Part #	Internet SKU #	Store SKU #
6	Deck plate	RP806124409		
7	Gasket	RP80768		
8	Easy install nut	RP56167		
9	Press pop-up assembly	RP402694409		