WATER CREATION

MODEL: MADISON24

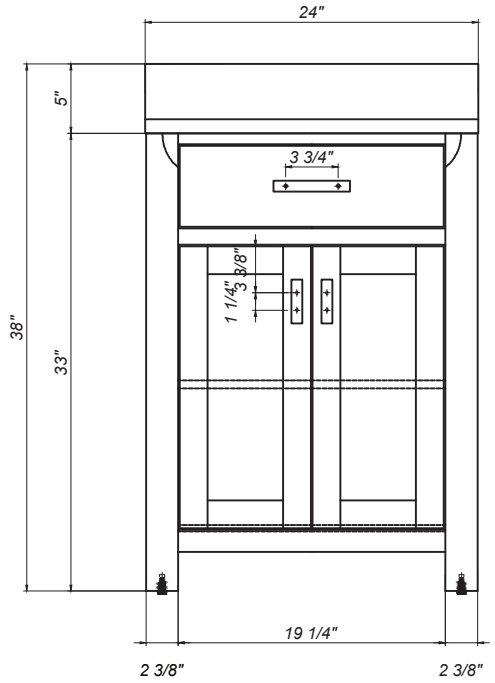

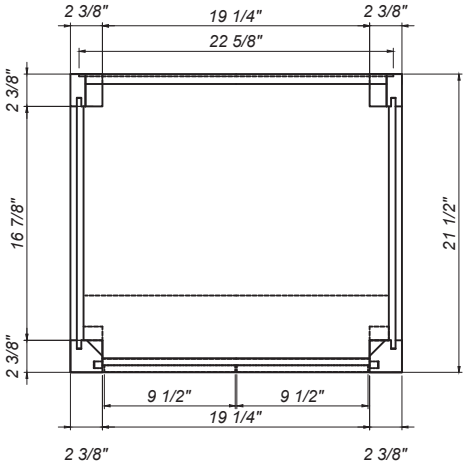

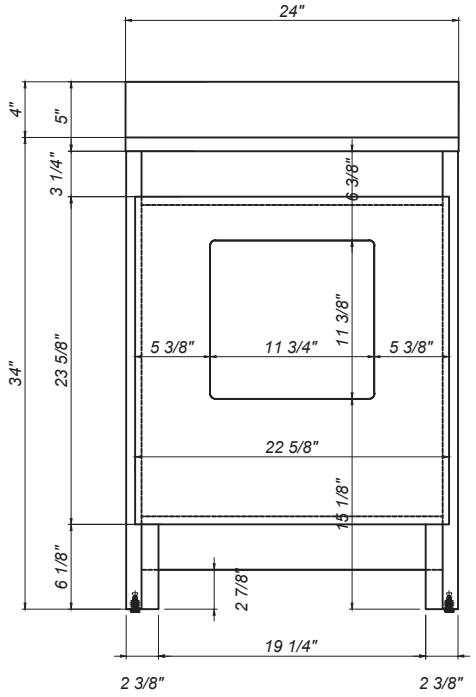

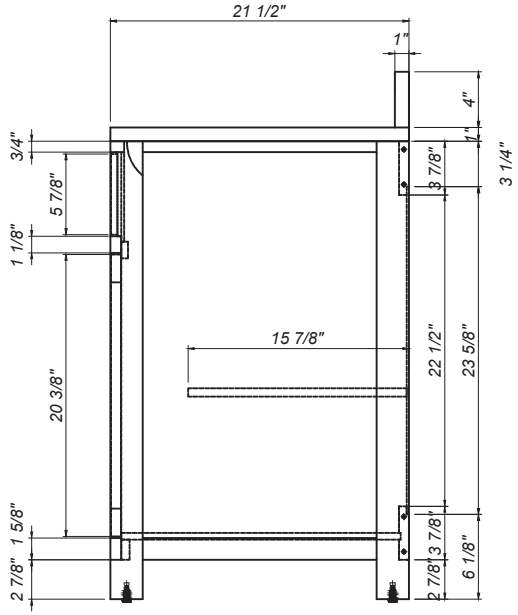

WATER CREATION

MODEL: MADISON24

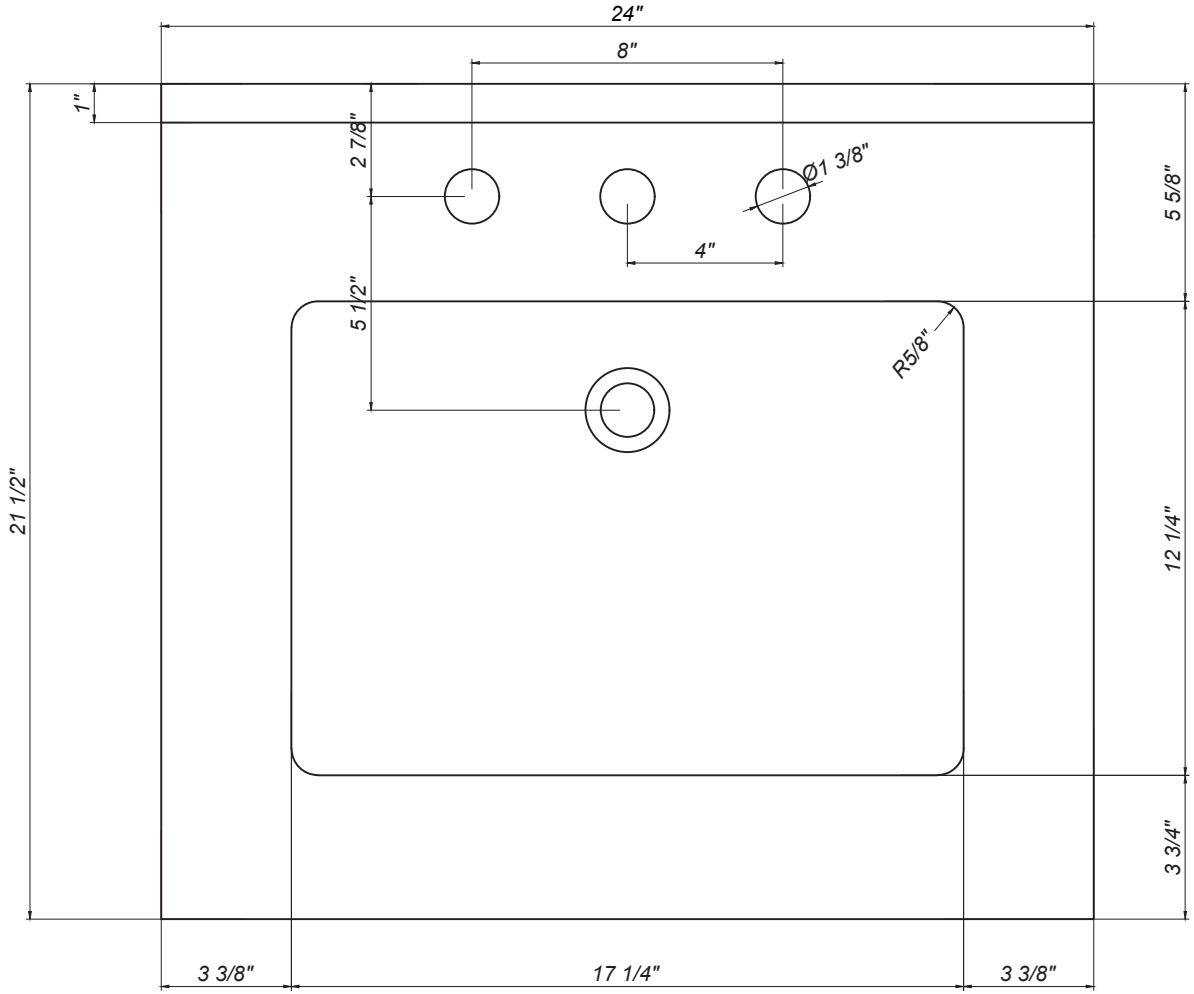

WATER CREATION

MODEL: MADISON24

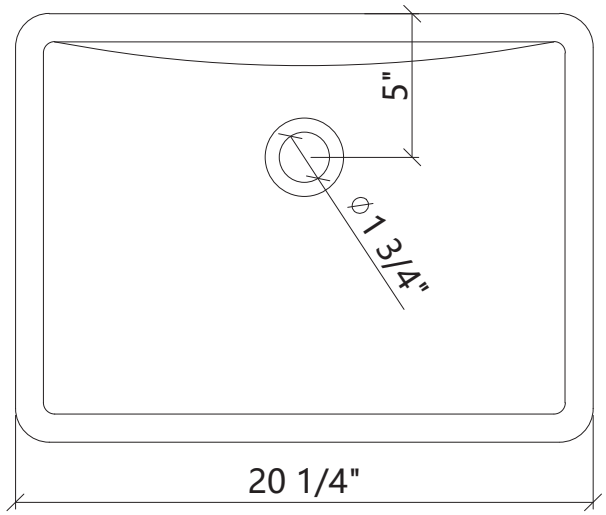

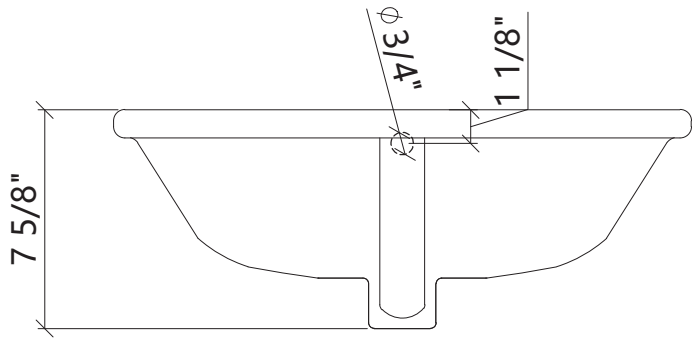

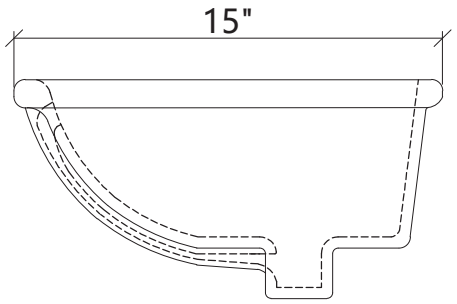

WATER CREATION

MODEL: RET-M-2136

