| | | | |
|---|---|---|---|
| 鹏辉 GREAT POWER | **PRODUCT SPECIFICATION** | Version: | A/3 |
| | | Date: | 2023-04-20 |
| | | Sample Number: LIR18650-2200mAh 2S3P-G07629-00A | |

For Any Detail and question, Please Tel Engineer: **+86 020-39197511** Web Page http://www.greatpower.net

ZHUHAI GREAT POWER ENERGY CO.,LTD
珠海鹏辉能源有限公司

Add: XINQING TECHNOLOGY PARK, ZHUFENG AVENUE, JING AN TOWN, DOUMEN DISTRICT, ZHUHAI CITY, GUANGDONG PROVINCE
地址:广东省珠海市斗门区井岸镇珠峰大道新青科技园

**CUSTOMER NO: G07629**
**CUSTOMER'S PART NO: 1200400349**

# Rechargeable Li-ion Battery Product Specification

# 可充锂离子电池产品规格书

Product Model/成品型号：ICR18650 2S3P 6600mAh 7.4V 48.84Wh

Cell Model/电芯型号：ICR18650 2200mAh 3.7V

| Prepared By/Date<br>编 制/日 期 | Checked By/Date<br>审 核/日 期 | Approved By/Date<br>批 准/日 期 |
|---|---|---|
| 陈金彪/2023/04/20 | | |

| | | |
|---|---|---|
| Customer Approval<br>客户确认 | Signature/签 字 | Date/日 期 |
| | | |
| | Company Name/公司名称 | |
| | Company Stamp/公司印章 | |

## Amendment Records/修正记录

| Revision<br>版 本 | Description/记 述 | Prepared by<br>编 制 | Approved by<br>批 准 | Date/日 期 |
|---|---|---|---|---|
| A/0 | First Publish | 陈金彪 | | 2022-07-20 |
| A/1 | 1. 变更线长<br>2. 去掉插头 | 陈金彪 | | 2022-09-12 |
| A/2 | 修正 PCM/MOS 的位号 | 陈金彪 | | 2023-03-09 |
| A/3 | 增加标签 | 陈金彪 | | 2023-04-20 |
| | | | | |
| | | | | |

## Content/目录


1. Scope/适用范围 Page 4
2. Model/型号 Page 4
3.Cell Specification/电芯规格说明 Page 4/5
4. Battery/Cell performance test Criteria/电池性能标准 Page 6
   4.1 Appearance inspection by visual/外观目测 Page 6
   4.2 Environmental test condition/外界环境条件 Page 6
   4.3 Electrical characteristics/电气特性 Page 6
4.4 Mechanical characteristics/机械特性 Page 7
4.5 Safety performance/安全性能 Page 8
5. Cell initial Dimensions/电芯初始尺寸 Page 9
6. Battery specification/产品规格 Page 10
7. PCM specification /保护板参数 Page 11
8. Application Circuit/线路板原理图 Page 11
9. Battery Pack Dimensions/电池组尺寸 Page 13
10. Handling of Cells /电池操作注意事项 Page 14
   10.1 Prohibition short circuit/禁止电池短路 Page 14
   10.2 Mechanical shock/机械撞击 Page 14
11. Notice for Designing Battery Pack/电池外壳设计注意事项 Page 14
   11.1 Pack toughness/外壳坚韧度 Page 14
   11.2 Cell fixing/电池的固定 Page 14
   11.3 Inside design/外壳内部设计 Page 14
   11.4 Tab connection /极片连接 Page 14
   11.5 For mishaps/针对意外事件 Page 14/15
12. Notice for Assembling Battery Pack 电池装配注意事项 Page 15
13. Others/其它 Page 15
   13.1 Cell connection/电池连接 Page 15
   13.2 Prevention of short circuit within a battery pack/电池内部的短路预防 Page 15
   13.3 Prohibition of disassembly/禁止拆卸 Page 15
   13.4 Prohibition of dumping of cells into fire/不要把电池倾倒于火中 Page 15
   13.5 Prohibition of cells immersion into liquid such as water/禁止浸泡电池 Page 15
   13.6 Battery cells replacement/更换电池 Page 15
   13.7 Prohibition of use of damaged cells/禁止使用损坏的电 Page 16
14. Period of Warranty/保质期 Page 16
15. Storage of the Batteries/电池的存放 Page 16
16. Other The Chemical Reaction/其它化学反应 Page 16
17. Note/注释 Page 16

**1 Scope/适用范围**

This specification is applied to describe the related Consumer Electronics product supplied by Great Power Energy CO., LTD only.

本规格书只适用于鹏辉能源有限公司提供的相关型号消费类电子产品。

**2 Model/型号： ICR18650**

**3 Cell specification/电芯产品规格**

| No. | Items/项目 | Specifications/规格 | | Remark 备注 |
|---|---|---|---|---|
| 1 | Nominal capacity 标称容量 | 2200mAh | | 0.2C Standard discharge 0.2C 标准放电 |
| 2 | Minimum capacity 最小容量 | 2150mAh | | |
| 3 | Nominal voltage 标称电压 | 3.7V | | Mean Operation Voltage 即工作电压 |
| 4 | Charge voltage 充电电压 | 4.20V±0.03V | | By standard charge method 标准充电方式 |
| 5 | Delivery voltage 交货电压 | 3.75-3.95V | | Within 10 days fromFactory 在出厂 10 天内 |
| 6 | Standard charging method 标准充电方式 | 0.2CC-CV to 4.2V, 0.01C cut off | | 0.2C 恒流充电至 4.2V，再 4.2V 恒压充至电流至 0.01C |
| 7 | Charge current 充电电流 | 0.2C | 440mA | Standard charge, charge time about 6.5h(Ref) 标准充电，时间约 6.5h(供参考) |
| | | 0.5C | 1100mA | Rapid charge, charge time about: 3h(Ref) 快速充电，时间约 3h(供参考) |
| 8 | Standard discharging method 标准放电方式 | 0.2CD to 3.0V | | 0.2C 恒流放电至 3.0V |
| 9 | Cell AC internal impedance 单电芯交流内阻 | ≤60mΩ(内含 PTC) | | Internal resistance measured at AC 1KHz at 50%SOC 50%SOC 电态下用交流法测量内阻 |
| 10 | Weight 重量 | 44.4±1.0g | | |

## 3 Cell Specification/电芯产品规格(continuous/续上表)

| No. | Items/项目 | Specifications/规格 | | Remark/备注 |
|---|---|---|---|---|
| 11 | Maximum charge current<br>最大充电电流 | 0.5C | 1100mA | |
| 12 | Maximum discharge current<br>最大放电电流 | 1C | 2200mA | |
| 13 | Maximum pulse discharge current<br>最大放电脉冲电流 | 2C | 4400mA | For pulse discharge mode<br>脉冲放电模式<br>T≤2s |
| 14 | Operation temperature and relative humidity range<br>工作温度和湿度范围 | 0.2C Charge/充电 | 0~15℃<br>60±25%R.H. | Charge at a very low temperature such as blew 0℃,will be get a lower capacity and reduce cycle life of the battery<br>低温＜0℃充电效率会下降，会影响电池使用寿命 |
| | | 0.5C Charge/充电 | 15~45℃<br>60±25%R.H. | |
| | | 0.2C Discharge/放电 | -20~0℃<br>60±25%R.H. | |
| | | 1C Discharge/放电 | 0~60℃<br>60±25%R.H. | |
| 15 | Storage temperature and time<br>储存温度与时间 | -20~25℃<br>60±25%R.H. | | 长期存储，≤6 个月充电一次 |
| | | -20~45℃<br>60±25%R.H. | | ≤3 个月 |
| | | -20~60℃<br>60±25%R.H. | | ≤1 个月 |

## 4 Cell performance test criteria/电池性能标准

### 4.1 Appearance inspection by visual/外观目测

There shall be no such defect as rust, leakage, which may adversely affect commercial value of cell.

电池外观应没有锈渍、污渍、漏液等影响商业价值的缺陷存在。

### 4.2 Environmental test condition/外界环境条件

Unless otherwise specified, all test stated in this product specification are conduct at below test condition

所有测试应按以下环境条件进行，除非特殊指定外。

Temperature: 25±5℃

Relative humidity:60%±25% R.H.

### 4.3 Cell electrical characteristics/电芯电气特性

| No | Items/项目 | Test method and condition/测试方法及条件 | Criteria/标准 |
|---|---|---|---|
| 1 | Discharge capacity at 1C(Min)<br>1C 放电容量 | After standard charge, the capacity shall be measured on 1C discharge till the voltage discharge to 3.0V<br>标准充电后，放电至 3.0V 截止，测量 1C 放电容量 | ≥90%@标准放电容量 |
| 2 | Cycle Life<br>循环寿命 | Charging and discharging battery as blew conditions<br>0.2CC-CV to 4.2V, 0.01C cut off<br>0.2CD to 3.0V<br>Continuous charge and discharge for 300 cycles ,the capacity will be measure after the 300th cycle.<br>充放电按以下条件：<br>0.2C 充电至 4.2V，0.2C 放电至 3.0V，连续充放电循环 300 周，在第 300 周结束后测量容量。 | ≥80%@初始容量 |
| 3 | Storage performance at room temperature<br>室温存储性能 | The cell is to be charge in accordance with standard charge condition at 20~25℃,then storage the cell at an ambient temperature 20~25℃ for 28 days. Measure the capacity after 28 days with 0.2C at 20~25℃ as retention capacity. Then charge and discharge with 0.2C at 20~25℃ as recover capacity.<br>将电池在 20~25℃标准充电后储存在 20~25℃的环境中 28 天。28 天后，测试电池在 20~25℃环境下 0.2C 放电容量作为保持容量。然后在在 20~25℃环境下测试 0.2C 充放电容量作为恢复容量。 | Retention capacity<br>容量保持≥85%<br>Recover capacity<br>容量恢复≥90% |
| 4 | Storage performance at high temperature<br>高温存储性能 | The cell is to be charge in accordance with standard charge condition at 20~25℃,then storage the cell at an ambient temperature 60±2℃ for 7 days. Measure the capacity after 7 days with 0.2C at 20~25℃ as retention capacity. Then charge and discharge with 0.2C at 20~25℃ as recover capacity.<br>将电池在 20~25℃标准充电后储存在 60±2℃的环境中 7 天。7 天后，测试电池在 20~25℃环境下 0.2C 放电容量作为保持容量。然后在在 20~25℃环境下测试 0.2C 充放电容量作为恢复容量。 | Retention capacity<br>容量保持≥70%<br>Recover capacity<br>容量恢复≥85% |
| 5 | Temperature characteristic of discharge capacity<br>放电温度特性 | Cells shall be charged per 3.6 and discharged @0.2C to 2.5V. Discharge temperature is according to Table 1. Cells shall be stored for 4 hours(low temperature) or 2h(high temperature) at the test temperature prior to discharging and then shall be discharged at the test temperature.Calculate the percentage of the capacity at each temperature divided by the capacity at 23℃. 电池应按 3.6 充电，以 0.2C 放电至 2.5V。放电温度如表 1 所示。 电池放电前应在试验温度下储存 4 小时(低温)或 2 小时(高温)，然后在试验温度下进行放电。计算每一种温度下的容量除以 23℃时的容量的百分比。 | Each cell shall meet or exceed the requirements of Table 1<br>温度中的放电容量应不小于表 1 的要求 |

Table 1 （表 1）

| Discharge temperature （放电温度） | -20℃ | -10℃ | 0℃ | 23℃ | 60℃ |
|---|---|---|---|---|---|
| Discharge capacity(0.2C) （放电容量/0.2C） | >50% | >60% | >85% | 100% | ＞98% |

### 4.4 Mechanical characteristics/机械特性

| No | Items/项目 | Test method and condition/测试方法及条件 | Criteria/标准 |
|---|---|---|---|
| 1 | Free fall test 自由跌落测试 | The cell is to be fully charged in accordance with standard charge condition, then drop the battery three times from a height of 1.0m onto a concrete floor. One fall on each end surface and two falls on the cylinder, A total of four fail. 电池按照标准充电条件充满电，然后从1.0m高度跌落电池到一个水泥地面，端面各跌落一次，圆柱面跌落2次，共跌落4次。 | No leakage, No explosion, No fire 无泄漏，无爆炸，无起火 |
| 2 | Vibration test 振动测试 | After standard charging, fixed the cell is to vibration table and subjected to vibration cycling that the frequency is to be varied at the rate of 1Hz per minute between 10Hz and 55Hz, the excursion of the vibration is 1.6mm. The cell shall be vibrated for 30 minutes per axis of X,Y,Z axes. 将标准充电后的电芯固定在振动台上，沿 X、Y、Z 三个方向各振动 30 分钟，振幅 1.6mm，振动频率为 10Hz~55Hz，每分钟变化 1Hz。 | No leakage, No explosion, No fire 无泄漏，无爆炸，无起火 |
| 3 | Crush test 挤压测试 | After standard charged, the cell is to be placed between two flat plates. The plate is pressed at a rate of (5±1)mm/s,until the extrusion force reaches 13.0±0.78kN. 电芯在标准满充后，放置在两块挤压板间。极板以(5±1)mm/s 的速度垂直于电池极板方向施压，直到挤压力达到 13.0±0.78kN 即可停止挤压。 | No explosion, No fire 无爆炸，无起火 |
| 4 | Impact test 重物冲击 | After standard charged, the cell is to be placed on a platform, put a 15.8±0.2mm metal rod on the geometric center of the cell, and an object with a weight of 9.1+0.1kg was used to hit the cell from a height of 610±25 mm with free falling, and then observing 6h 电芯在标准满充后，放置在平台上，将直径为 15.8±0.2mm 的金属棒横置在电芯的几何中心上，采用 9.1±0.1kg 的重物从 610±25 mm 的高处自由落体状态撞击放有金属棒的电池，观察 6 h。 | No explosion, No fire 无爆炸，无起火 |

### 4.5 Safety performance/安全性能

| No | Items/项目 | Test method and condition/测试方法及条件 | Criteria/标准 |
|---|---|---|---|
| 1 | Thermal exposure test<br>热冲击测试 | Each fully charged cell, stabilized at room temperature, is placed in a circulating air-convection oven. The oven temperature is raised at a rate of 5 ± 2℃/min to a temperature of 130 ± 2℃. The cell remains at this temperature for 30 minutes before the test is discontinued.<br>充满电的电池温度稳定到常温后，放置入循环空气烘箱里，从常温以5 ±2 ℃/分的速率升至130± 2℃后，在130± 2℃放置30分钟。 | No explosion, No fire<br>无爆炸，无起火 |
| 2 | Short test<br>短路测试(25±5℃) | The fully charged cell is to be short-circuited by connecting the positive and negative terminals of the battery with resistance load 80±20mΩ.Tests are to be conducted at room temperature about 25±5℃. When the battery temperature drops to about 20% lower than the peak or the short-circuited time reachs 24h,the end of the test.<br>在室温约为 25±5℃把充满电的电池的正负极用全部外接电阻 80±20mΩ 的负载连接起来，连接起来使电池外部短路。当电池温度下降到比峰值低约 20％时或短路时间达到 24h 时，结束试验 | No explosion, No fire<br>The temperature of the cell surface not exceeded than 150℃<br>无爆炸，无起火，电池表面温度不超过 150℃ |
| 3 | Short test<br>短路测试(55±5℃) | Tests are to be conducted at temperature about 55±5℃ and remain the cell 30 minutes. The fully charged cell is to be short-circuited by connecting the positive and negative terminals of the battery with resistance load 80±20mΩ. When the battery temperature drops to about 20% lower than the peak or the short-circuited time reachs 24h,the end of the test.<br>在约为 55±5℃环境下静置 30min 后，把充满电的电池的正负极用全部外接电阻 80±20mΩ 的负载连接起来，连接起来使电池外部短路。当电池温度下降到比峰值低约 20％时或短路时间达到 24h 时，结束试验。 | No explosion, No fire<br>The temperature of the cell surface not exceeded than 150℃<br>无爆炸，无起火，电池表面 温度不超过 150℃ |
| 4 | Forced discharge test<br>过放电测试 | A discharged cell is subjected to a reverse charge at 1C for 90 min.<br>将电芯放完电，再用1C反接充电90分钟。 | No explosion, No fire<br>无爆炸，无起火 |
| 5 | Over charge test<br>过充电测试 | After standard discharge, continue to charge with a constant voltage 3C/4.6V per a cell, holding 7h.<br>电芯标准放完电后，以 3C/4.6V 的恒定电压继续充电，保持 7 小时。 | No explosion, No fire<br>无爆炸，无起火 |

## 4 Cell initial Dimensions/电芯初始尺寸

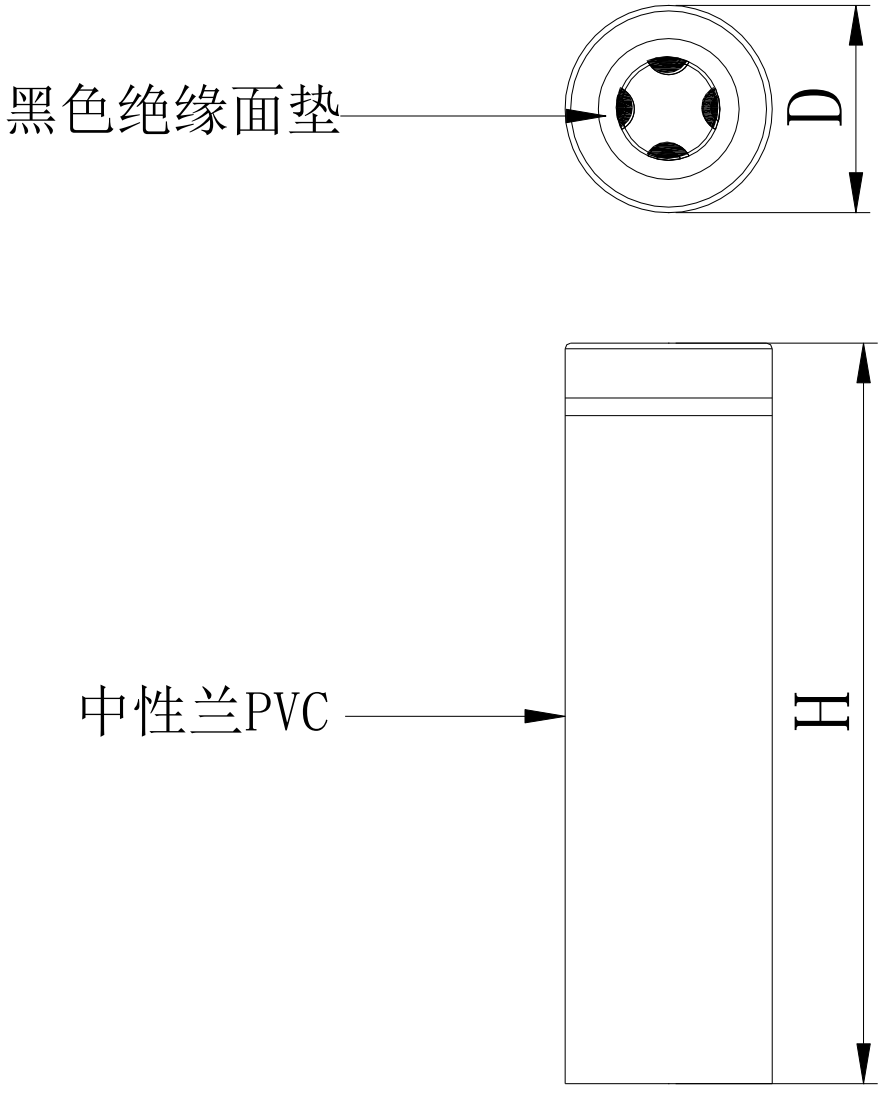


| NO | Items | Units :mm |
|---|---|---|
| 1 | Diameter/直径(D) | 18.3±0.2mm |
| 2 | Height/高度(H) | 65.2±0.3mm |

## 6 Battery specifications/电池包产品规格

| No. | Items/项目 | Specifications/规格 | | Remark 备注 |
|---|---|---|---|---|
| 1 | Capacity for assembled cell discharging by 0.2C 电芯组装后 0.2C 标准放电的容量 | ≥6430mAh | | Standard discharging method 标准放电方式 |
| 2 | Battery Voltage 电池电压 | 7.5-7.9V | | Delivery Voltage, Within 10 days from Factory 交货电压，在出厂 10 天内 |
| 3 | Standard charge condition 标准充电条件 | Charge with 0.2C constant current and 8.4V constant voltage, charge to 8.4V,continue charging till current decline to ≤0.01C 充电电流用 0.2C 恒流 8.4V 恒压充至电流≤0.01C | | Charge voltage: 8.4V±0.03V Charge current:0.2C 充电电压：8.4V±0.03V 充电电流：0.2C |
| 4 | Standard discharging method 标准放电方式 | 0.2C constant current discharge to 6.0V | | 0.2C 恒流放电至 6.0V |
| 5 | Operation temperature and relative humidity range 工作温度和湿度范围 | 0.2C Charge/充电 | 0~15℃ 60±25%R.H. | Charge at a very low temperature such as blew 0℃,will be get a lower capacity and reduce cycle life of the battery 低温＜0℃充电效率会下降，会影响电池使用寿命 |
| | | 0.5C Charge/充电 | 15~45℃ 60±25%R.H. | |
| | | 0.2C Discharge/放电 | -20~0℃ 60±25%R.H. | |
| | | 1C Discharge/放电 | 0~60℃ 60±25%R.H. | |
| 6 | Internal Impedance 内阻 | Assemblage Impedance 装配后内阻≤120mΩ | | Measure two sides of the drawing line after assembling. 装配后测试电池引线两端 |

## 7 PCM specification/保护板参数

| 保护 IC | R5460N222AA | 技术参数 parameter value | | | |
|---|---|---|---|---|---|
| 项目名称 Item name | | 最小值 min | 典型值 type | 最大值 max | 单位 unit |
| 过充保护电压 | | 4.175 | 4.200 | 4.225 | V |
| 过充保护恢复电压 | | 4.050 | 4.100 | 4.150 | V |
| 过放保护电压 | | 2.632 | 2.700 | 2.768 | V |
| 过放保护恢复电压 | | 2.778 | 2.850 | 2.922 | V |
| 放电过流检测电压 | | 185 | 200 | 215 | mV |
| 放电过流保护电流 | | 15 | - | 25 | A |
| 过充电过流检测电压 | | -230 | -200 | -170 | V |
| 过充过流保护电流 | | 6.0 | - | 12.0 | A |
| 过充电检测延迟时间 | | 700 | 1000 | 1300 | ms |
| 过放电检测延迟时间 | | 89 | 128 | 167 | ms |
| 过电流检测延迟时间 | | 8 | 12 | 16 | ms |
| 过充电流检测延迟时间 | | 5 | 8 | 11 | ms |
| 短路保护延迟时间 | | 150 | 300 | 500 | μs |
| 正常状态下静态电流 | | - | 4.0 | 8.0 | μA |
| 过放状态下静态电流 VDD=2.0V | | - | - | 0.1 | μA |
| 导通内阻 | | - | - | 65 | mΩ |
| 输入电压（B+与 B−间） | | VSS-0.3 | - | VSS+12 | V |
| 最大持续充电电流 | | | | | A |
| 最大持续放电电流 | | | | | A |
| 工作温度 | | -40 | - | 85 | °C |
| 推荐贮存条件 | | -55 | - | 125 | °C |
| 0V 电池充电功能 | | | 可能 | | |

## 8.1Application Circuit 线路板原理图

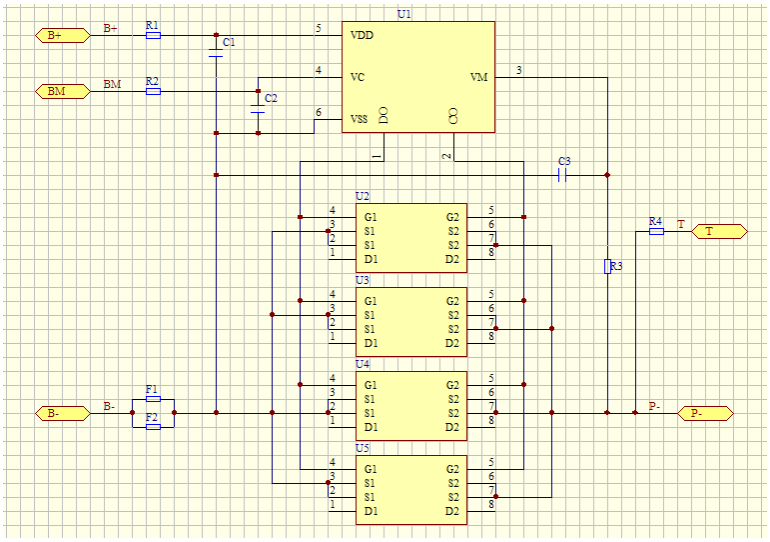


## 8.2 PCB 图 PCB layout

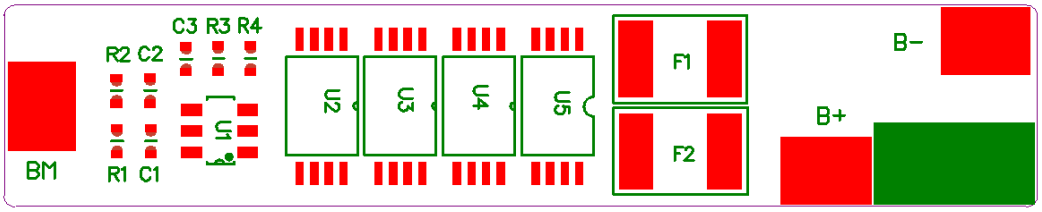





## 8.3 物料清单 parts list

| 序号 | 名称 | 规格型号 | 单位 | 位号 | 用量 |
|---|---|---|---|---|---|
| 1 | 贴片 IC | R5460N222AA,SOT-23-6,理光 | PCS | U1 | 1 |
| 2 | MOS 管 | FNK10N25B,TSSOP-8,HF,乾野 | PCS | U2 U3 | 2 |
| 3 | 贴片电阻 | 0402,330Ω,±5%,1/16W,HF,YAGEO | PCS | R1 R2 | 2 |
| 4 | 贴片电阻 | 0402,1KΩ,±5%,1/16W,HF,YAGEO | PCS | R3 | 1 |
| 5 | 贴片电容 | 0402,0.1uF,-20～+80%,Y5V,25V,无卤素,YAGEO | PCS | C1 C2 | 2 |
| 6 | 贴片电容 | 0402,0.01uF,-20～+80%,Y5V,25V,无卤素,YAGEO | PCS | C3 | 1 |
| 7 | NTC | / | PCS | R4 | 1 |
| 8 | PTC | TLC-MSML750/12,1812，竟沃 | PCS | F1 | 1 |
| 9 | 镍片 | 4.0*3.0*0.3mm，镀镍 | PCS | B+ B- BM | 3 |
| 10 | PCB | 0DK0205D1803 P-2S4609EAA,46*9.0mm*0.8mm,FR-4,无铅喷锡， 绿油，白字，成品铜厚 2.0 0Z 2 层 | PCS | / | 1 |

## 9 Battery Pack Dimensions/电池尺寸

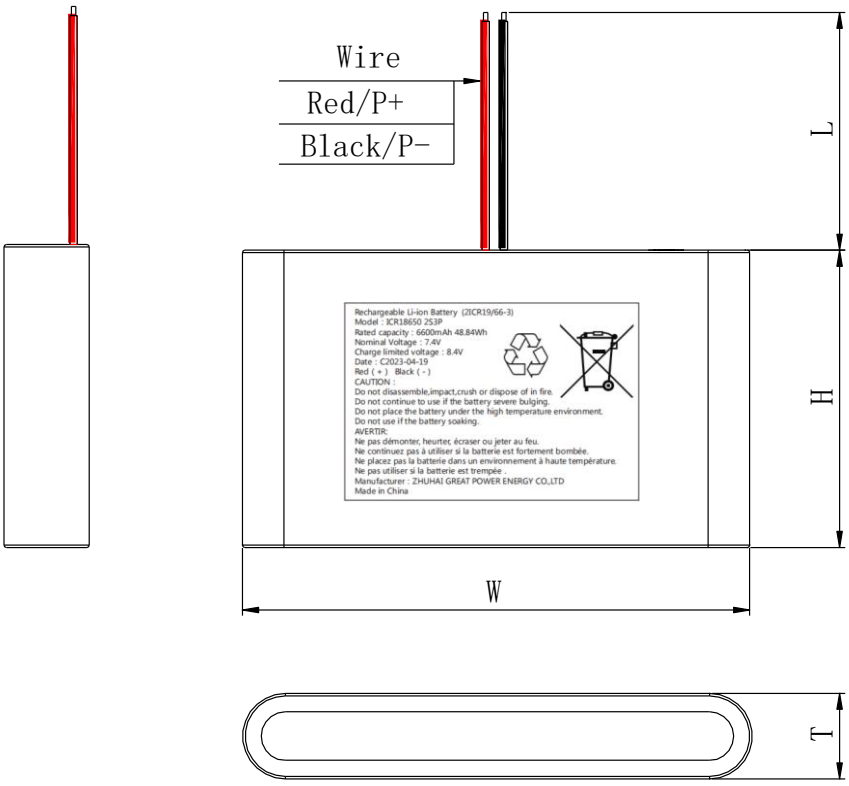


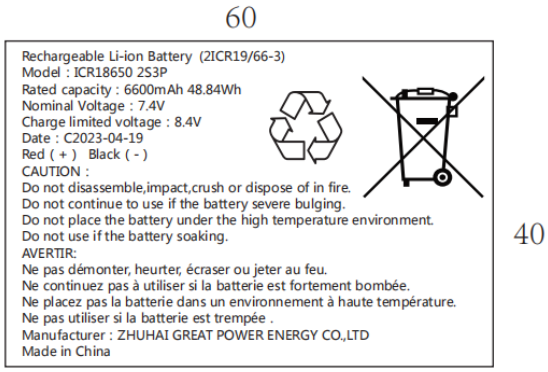


| NO | Items | Units :mm | | Remark |
|---|---|---|---|---|
| 1 | Thickness/厚度 | T | 21.5 | Max. |
| 2 | Width/宽度 | W | 111.5 | Max. |
| 3 | Height/长度 | H | 69.0 | Max. |
| 4 | Cable Length/引线长度 | L | 140±5 | |

BOM of Battery Pack/电池组物料清单

| NO | Part name/名称 | Quantity/数量 | Unit/单位 | Remark |
|---|---|---|---|---|
| 1 | Cell/电芯 | 6 | ea | Great Power |
| 2 | Solder/焊锡 | 0.2 | g | Lead Free |
| 3 | Wire/导线 | 2 | Ea | UL1007#18 红、黑 |
| 4 | PCM/保护板 | 1 | pcs | P-2S4609EAF |
| 5 | PVC | 1 | pcs | 中性兰 |
| 6 | Label/标签 | 1 | pcs | 白底黑字 |

## 10 Handling of Cells /电池操作注意事项

10.1 Prohibition short circuit/禁止电池短路

Never make short circuit cell. It generates very high current which causes heating of the cells and may cause electrolyte leakage, gassing or explosion these are very dangerous.

The LIR tabs may be easily short-circuited by putting them on conductive surface.

Such outer short circuit may lead to heat generation and damage of the cell.

An appropriate circuitry with PCM shall be employed to protect accidental short circuit of the battery pack.

避免电池短路。短路会产生很高的电流而使电池发热以及电解液泄漏，产生有毒气体或爆炸是非常危险的。极片连接在导电物体表面很容易短路，外部短路会导致发热及损害电池。选用一个适当的保护电路可以在意外短路时保护电池。

10.2.Mechanical shock/机械撞击

Falling, hitting, bending, etc. may cause degradation of LIR characteristics.

跌落、碰撞、弯曲等等都可能会降低圆柱电池的性能。

## 11 Notice for Designing Battery Pack/电池外壳设计注意事项

11.1 Pack toughness/外壳坚韧度

Battery pack should have sufficient strength and the LIR cell inside should be protected from mechanical shocks.

电池外壳应该有足够的机械强度使圆柱电池免受机械撞击。

11.2 Cell fixing/电池的固定

The LIR cell should be fixed to the battery pack by its large surface area.

No cell movement in the battery pack should be allowed.

电池最大面积的一面应该固定在外壳上，安装后电池不能有松动。

11.3 Inside design/外壳内部设计

No sharp edge components should be insides the pack containing the LIR cell.

外壳内安装电池的部位不应有锋锐边。

11.4 Tab connection /极片连接

Ultrasonic welding or spot welding is recommended for LIR tab connection method.

Battery pack should be designed that shear force are not applied to the LIR tabs.

If apply manual solder method to connect tab with PCM, below notice is very important to ensure battery performance:

1) The solder iron should be temperature controlled and ESD safe;
2) Soldering temperature should not exceed 350°C;
3) Soldering time should not be longer than 3s;
4) Soldering times should not exceed 5 times, Keep battery tab cold down before next time soldering;
5) Directly heat cell body is strictly prohibited, Battery may be damaged by heat above approx. 100°C

建议使用超声波或点焊焊接方法；外壳设计应使极片不受外力.

如果使用人工焊接保护板，下面的注意事项对于确保电池性能非常重要：

1) 焊接铬铁的温度必须可控且可防静电；
2) 焊接时铬铁的温度不能超过 350℃；
3) 焊锡时间不能超过 3 秒钟；
4) 焊锡次数不能超过 5 次，待极片冷却后才能进行下一次焊锡；
5) 严禁直接加热电芯，高于 100℃度会损害电芯。

11.5 For mishaps/针对意外事件

Battery pack should be designed not to generate heat even when leakage occurs due to mishaps.

1) Isolate PCM (Protection Circuit Module) from leaked electrolyte as perfectly as possible.
2) Avoid narrow spacing between bare circuit patterns with different voltage.

(Including around connector)

LIR battery should not have liquid from electrolyte, but in case If leaked electrolyte touch bare circuit patterns, higher potential terminal material may dissolve and precipitate at the lower potential terminal, and may cause short circuit. The design of the PCM must have this covered.

发生意外时外壳设计应考虑即使在电池出现漏液时也不会发热。

1) 尽量把保护电路与渗漏的电解液隔离开。
2) 在不同的电压情况下避免出现小间距的裸露电路——包括插头周围。
3) 圆柱电池不应该有来自电解液的液体，但是一但发生电解液渗漏触及裸露电路，高电势端接子材料可能会溶解然后沉淀到低电势端接子，可能会造成短路。保护板的设计必须含有覆盖保护层。

## 12 Notice for Assembling Battery Pack 电池装配注意事项

Shocks, high temperature, or contacts of sharp edge components should not be allowed in battery pack assembling process.

在电池装配过程中不允许撞击、高温或接触尖锐部分。

## 13 Others/其它

13.1 Cell connection/电池连接

1) Direct soldering of wire leads or devices to the cell is strictly prohibited.
2) Lead tabs with pre-soldered wiring shall be spot welded to the cells.

Direct soldering may cause damage of components, such as separator and insulator, by heat generation.

1) 严禁直接焊接引线或设备到电池上。
2) 极片在焊接引线之前应该先点焊到电池上，直接与电池热焊接，产生的热量会使电池的隔离体及绝缘体受损。

13.2 Prevention of short circuit within a battery pack/电池内部的短路预防

Enough insulation layers between wiring and the cells shall be used to maintain extra safety protection. The battery pack shall be structured with no short circuit within the battery pack, which may cause generation of smoke or firing.

在电池和引线之间应该有足够的绝缘层用于安全保护。电池的包装构成应没有导致起烟起火的短路情况。

13.3 Prohibition of disassembly/禁止拆卸

1) Never disassemble the cells

The disassembling may generate internal short circuit in the cell, which may cause gassing, firing, explosion, or other problems.

2) Electrolyte is harmful

LIR battery should not have liquid from electrolyte flowing, but in case the electrolyte come into contact with the skin, or eyes, physicians shall flush the electrolyte immediately with fresh water and medical advice is to be sought.

1) 不要拆卸电池。

拆卸电池会发生电池内部短路，会引起起火、爆炸、有害气体或者其它问题。

2) 电解液是有害的

万一电解液沾到皮肤、进入眼睛，应立即用清水冲洗以及求助医生。

13.4 Prohibition of dumping of cells into fire/不要把电池倾倒于火中

Never incinerate nor dispose the cells in fire. These may cause explosion of the cells, which is very dangerous and is prohibited.不要焚毁电池，否则会致电池爆炸，这个很危险，必须禁止。

13.5 Prohibition of cells immersion into liquid such as water/禁止浸泡电池

The cells shall never be soaked with liquids such as water, seawater, drinks such as soft drinks, juices, coffee or others.

请不要把电池浸泡在液体当中，像清水、海水，及非酒精饮料、果汁、咖啡或者其它的饮料。

13.6 Battery cells replacement/更换电池

The battery replacement shall be done only by either cells supplier or device supplier and never be done by the user.

更换电池应由电池生产商或设备供应商完成，用户不要自行更换。

13.7 Prohibition of use of damaged cells/禁止使用损坏的电池

The cells might be damaged during shipping by shock. If any abnormal features of the cells are found such as damages in a plastic envelop of the cell, deformation of the cell package, smelling of an electrolyte, an electrolyte leakage and others, the cells shall never be used any more.

The Cells with a smell of the electrolyte or a leakage shall be placed away from fire to avoid firing or explosion.

电池可能在出货途中碰撞而受损。如果发现电池有异常，例如包装损坏，电池包裹变形，有电解液的味道，发现漏液等等，不要再使用这些电池。

电池如果有电解液的味道或者出现漏液，电池放置应该远离火源避免起火及爆炸。

## 14 Period of Warranty/保质期

The period of warranty is one year from the date of shipment. Great Power guarantees to give a replacement in case of cells with defects proven due to manufacturing process instead of the customer abuse and misuse.

电池的保质期从出货之日算起为一年。如果电池的缺陷是在制造过程中形成的而不是由于用户滥用及错误使用造成，本公司负责退换电池。

## 15 Storage of the Batteries/ 电池的存放

The batteries should be stored at room temperature, charged to about 30% to 50% of capacity.

We recommend that batteries be charged about once per half a year to prevent over discharge.

电池应当在室温下存放，应充到 30%至 50%的电量。如长时间储存，建议每半年充一次电以防止电池过放电。

## 16 Other The Chemical Reaction/其它化学反应

Because batteries utilize a chemical reaction, battery performance will deteriorate over time even if stored for a long period of time without being used. In addition, if the various usage conditions such as charge, discharge, ambient temperature, etc. are not maintained within the specified ranges the life expectancy of the battery may be shortened or the device in which the battery is used may be damaged by electrolyte leakage. If the batteries cannot maintain a charge for long periods of time, even when they are charged correctly, this may indicate it is time to change the battery.

由于电池是利用化学反应的原理，所以随时间的增加电池的性能会降低，即使是存放很长一段时间而不使用。如果使用条件如充电、放电及周围环境温度等情形不在指定的使用范围内，会使缩短电池的使用寿命，或者会产生漏液导致设备损坏。如果电池长周期不能充电，即使充电方法正确，这样需要更换电池了。

## 17 Note/注释

Any other items which are not covered in this specification shall be agreed by both parties.

本说明书未包括事项应由双方协议确定。