USER MANUAL

Levoit Core® 300-P Air Purifier

Models: Core 300, Core 300-RAC

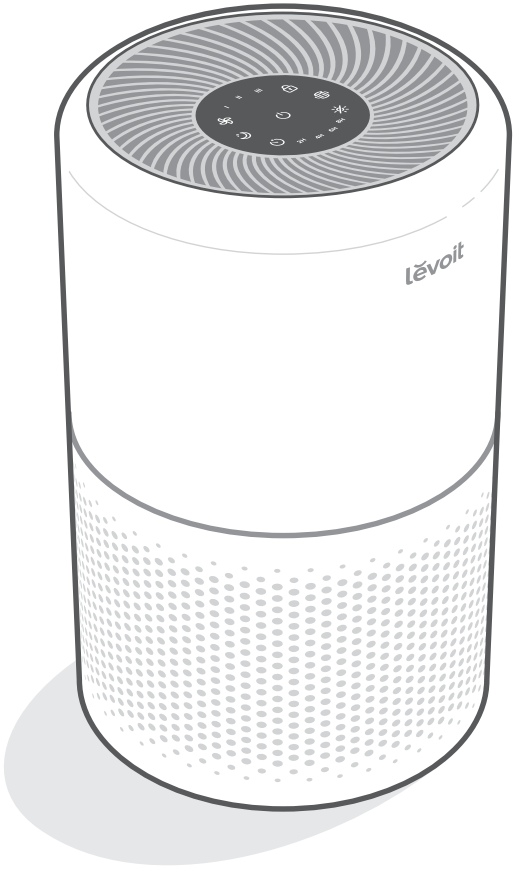

Questions or Concerns?

Please contact us Mon–Fri, 9:00 am–5:00 pm PST/PDT
at **support@levoit.com** or at **(888) 726-8520**.

Table of Contents

Package Contents	**2**
Specifications	**2**
Safety Information	**3**
Getting to Know Your Air Purifier	**5**
Controls	**6**
Getting Started	**7**
Using Your Air Purifier	**8**
About the Filter	**10**
Levoit Replacement Filters	**12**
Care & Maintenance	**13**
Troubleshooting	**15**
Warranty Information	**18**
Customer Support	**19**

Package Contents

1 x Air Purifier
1 x Original Filter (Pre-Installed)
1 x User Manual
1 x Quick Start Guide

Specifications

Power Supply	AC 120V, 60Hz
Rated Power	45W
Ideal Room Size	219 ft^2 / 20 m^2 • This Ideal Room Size is based on 5 air changes per hour (ACH). 548 ft^2 / 50 m^2 • This Ideal Room Size is based on 2 air changes per hour (ACH). ***Note:*** *Effective for larger rooms but purification will take longer.*
CADR (CFM)	Smoke: 141 Dust: 140 Pollen: 145
Operating Conditions	**Temperature:** 14°–104°F / -10°–40°C
	Humidity: < 85% RH
Noise Level	24–50dB
Dimensions	8.7 x 8.7 x 14.2 in / 22 x 22 x 36 cm
Weight	7.5 lb / 3.4 kg

READ AND SAVE THESE INSTRUCTIONS

SAFETY INFORMATION

To reduce the risk of fire, electric shock, or other injury, follow all instructions and safety guidelines.

General Safety

- **Only** use your air purifier as described in this manual.
- **Do not** use without removing the plastic wrap from the filter. The air purifier will not filter air, and may overheat, causing a fire hazard.
- **Do not** use your air purifier outdoors.
- Keep your air purifier away from water, and wet or damp areas. **Never** place in water or liquid.
- **Do not** use in excessively humid areas.
- Keep your air purifier away from heat sources.
- **Do not** use where combustible gases, vapors, metallic dust, aerosol (spray) products, or fumes from industrial oil are present.
- Keep 5 ft / 1.5 m away from where oxygen is being administered.
- Supervise children when they are near the air purifier. **Do not** allow children to play with the air purifier.
- **Do not** place anything into any opening on the air purifier, unless directed by the manual.
- **Do not** sit on or place heavy objects on the air purifier.
- Keep the inside of the air purifier dry. To prevent moisture buildup, avoid placing in rooms with major temperature changes or underneath air conditioners.
- **Always** unplug your air purifier before servicing (such as changing the filter).
- **Do not** use your air purifier if it is damaged or not working correctly, or if the cord or plug is damaged. **Do not** try to repair it yourself. Contact **Customer Support** (see page 19).
- **WARNING:** To reduce the risk of fire or electric shock, **do not** use this air purifier with any solid-state speed controls (such as a dimmer switch).
- Children should not clean or perform maintenance on the air purifier without supervision.
- This air purifier is not to be used by persons (including children) with reduced physical, sensory, or mental capacities, or lack of experience and knowledge, unless they have been given supervision or instruction concerning the use of the appliance by a person responsible for the safety.
- Not for commercial use. Household use **only**.

Power & Cord

- Keep air purifier near the outlet it is plugged into.
- **Never** place the cord near any heat source.
- **Do not** cover the cord with a rug, carpet, or other covering. **Do not** place the cord under furniture or appliances.
- Keep the cord out of areas where people walk often. Place the cord where it will not be tripped over.
- This appliance has a polarized plug (one blade is wider than the other). To reduce the risk of electric shock, this plug is intended to fit in a polarized outlet **only** one way. If the plug does not fit fully in the outlet, reverse the plug. If it still does not fit, contact a qualified electrician. **Do not** attempt to defeat this safety feature.
- If the power supply cord is damaged, it must be replaced by Arovast Corporation or similarly qualified persons in order to avoid an electric or fire hazard. Please contact **Customer Support** (see page 19).
- This air purifier uses standard US 120V, 60Hz outlets. If using outside of North America, check for compatibility.

Electromagnetic Fields (EMF)

Your Levoit air purifier complies with all standards regarding electromagnetic fields (EMF). If handled properly and according to the instructions in this user manual, the appliance is safe to use based on scientific evidence available today.

GETTING TO KNOW YOUR AIR PURIFIER

A. Fan Speed Indicators
B. Fan Speed Button
C. Sleep Mode Indicator/Button
D. Timer Button
E. Timer Indicators
F. On/Off Button
G. Display Lock Button
H. Check Filter Indicator
I. Display Off Button
J. Air Outlet
K. Housing
L. Air Inlet
M. Power Cord
N. Filter Cover
O. Original Filter

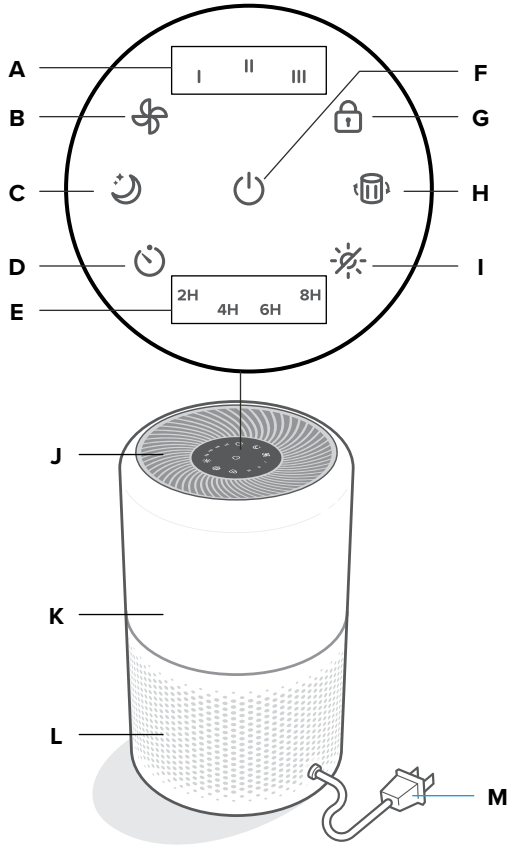

Back

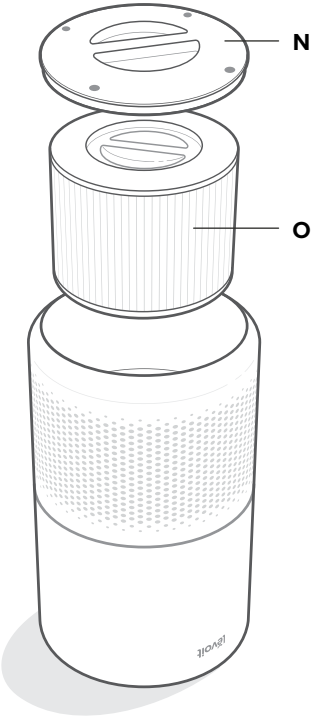

Front, upside down

CONTROLS

On/Off Button
- Turns the air purifier on/off.

Fan Speed Button
- Cycles through fan speeds: I (low), II (medium), and III (high).

Sleep Mode Button
- Turns Sleep Mode on/off (see page 8).

Timer Button
- Cycles through timer options (see page 9).

Display Lock Button
- Prevents current settings from being changed (see page 9).

Check Filter Indicator
- Lights up when the filter should be checked (see **Check Filter Indicator**, page 13).

Display Off Button
- Turns the display off.
- Tap any button (except ⏻) to turn the display back on.

GETTING STARTED

1. Flip the air purifier over. Twist the filter cover counterclockwise and remove it. *[Figure 1.1]*
2. Remove the filter from its plastic packaging and place the filter back into the air purifier with the handle facing up. *[Figure 1.2]*

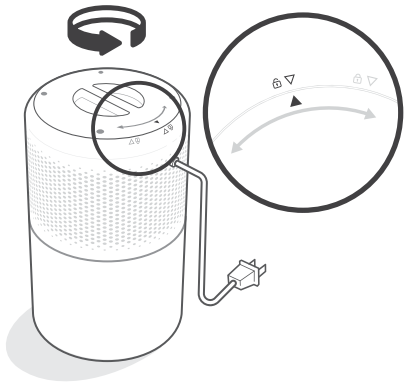

Figure 1.1

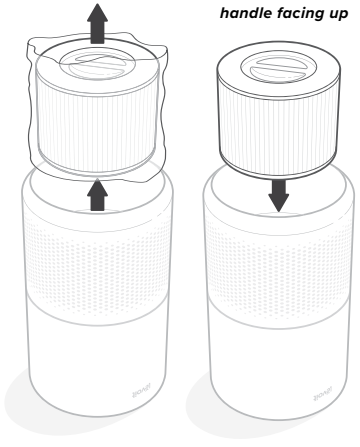

Figure 1.2

3. Replace the filter cover and twist clockwise to lock. *[Figure 1.3]*

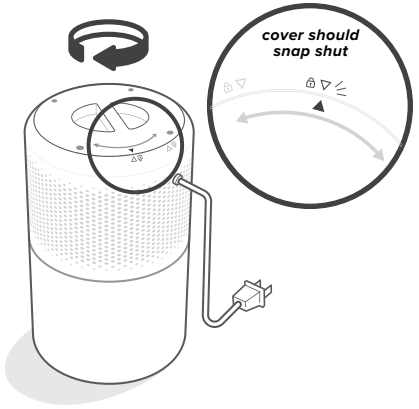

Figure 1.3

USING YOUR AIR PURIFIER

1. Place the air purifier on a flat, stable surface with the display facing up. Allow at least 15 inches / 38 cm of clearance on all sides of the air purifier. Keep away from anything that would block airflow, such as curtains. ***[Figure 2.1]***
2. Plug in and tap ⏻ to turn on the air purifier. The fan will start on level I. ***[Figure 2.2]***
3. Optionally, tap ✣ to change fan speed between I, II, and III.

Note:

- *The indicators are not buttons and cannot be used to change the fan speed.*
- *The fan speed indicators will light up when active.*
- *Fan speed III is the loudest, but cleans air the quickest.*
- *For best results, or to address a specific air quality issue such as smoke, run the air purifier at high speed (level III) for 15–20 minutes before using a lower speed.*
- *To effectively clean air, keep windows and doors closed while the air purifier is on.*

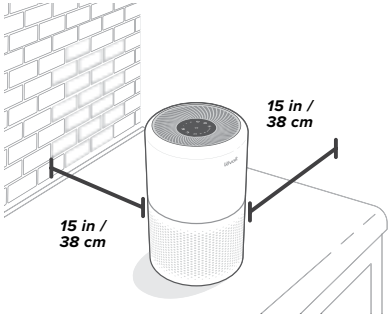

Figure 2.1

4. Tap ⏻ to turn off the air purifier.

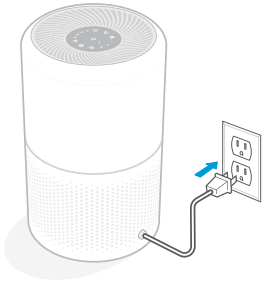

Figure 2.2

Memory Function
When the air purifier is plugged in, it will remember its previous fan speed setting.

Note: *The air purifier will not remember timers or Sleep Mode.*

Sleep Mode
Sleep Mode operates quietly by using the lowest possible fan speed.

- Tap ☾ to turn Sleep Mode on/off.
- Tapping ✣ will exit Sleep Mode.

Note:

- *All indicators will be at half brightness while Sleep Mode is on.*

Timer
You can set a timer for 2, 4, 6, or 8 hours.

1. Tap ⏲ repeatedly to select a time. The timer will start automatically.

Note:

- *The indicators are not buttons and cannot be used to select a time.*
- *The timer indicators will light up blue when active.*

2. Once the timer has finished, the air purifier will turn off.
3. To cancel a timer, tap ⏲ until all timer indicators are off.

Note:

- *You can change the fan speed at any time while the timer is on.*
- *The timer will restart if the time is changed.*

Display Lock
Locking the display prevents settings from being accidentally changed. Buttons will not respond to being tapped.

1. Tap and hold 🔒 for 3 seconds to lock/unlock the display.

Note: *You can turn the display on and off even if the display is locked.*

ABOUT THE FILTER

The air purifier uses a 3-stage filtration system to purify air.

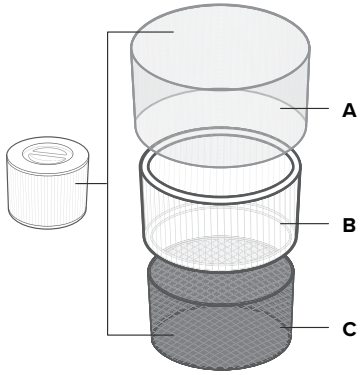

A. Pre-Filter

- Captures large particles such as dust, lint, fibers, hair, and pet fur.
- Maximizes the filter's life by protecting it.

B. Original Filter

- Traps at least 99.97% of airborne particles 0.3 microns (μm) in size.
- Captures 99.99% of bacteria and 99.9% of viruses.
- Filters small particles such as fine dust, smoke particles, and allergens such as pollen and pet dander.

Note: *Levoit air purifiers filter airborne particles 0.3 microns in size. Arovast Corporation makes no claims that this air purifier helps reduce the COVID-19 virus.*

C. High-Efficiency Activated Carbon Filter

- Physically adsorbs smoke, odors, and fumes.
- Filters compounds such as formaldehyde, benzene, ammonia, hydrogen sulfide, and volatile organic compounds (VOCs).

Clean Air Delivery Rate

Clean Air Delivery Rate (CADR) measures the efficiency of an air purifier by indicating the volume of clean air that an air purifier produces per minute. This is based on removal of dust, pollen, and smoke, which are the 3 most common indoor air pollutants. The higher the CADR, the more particles the air purifier will remove and the larger the area it can clean. The rating is measured at the air purifier's highest speed.

Air Change per Hour

The air change rate is how many times all of the air in a room can be purified (or "changed") by the air purifier in 1 hour. Air changes per hour are calculated on the recommended room size assuming 8 ft / 2.4 m ceilings. For smaller rooms, the air change per hour will increase.

This air purifier can change air 5 times per hour at the max speed in a single, closed room up to 219 ft^2 / 20 m^2 in size. This is measured at ACH 5. The air purifier is effective for larger rooms, but air purification will take longer, with fewer air changes per hour. For example, the air purifier's effective range is 548 ft^2 / 50 m^2 based on 2 ACH, or purifying the air in the room 2 times per hour.

Note: *To effectively clean air, keep windows and doors closed while the air purifier is on.*

Humidity

Moisture may damage the filter. This air purifier should be used in an area with a humidity level below 85% RH. If you use the air purifier in excessively humid areas, the surface of the filter will become moldy.

Note: *Water or moisture will allow mold to grow. To solve a mold problem, get rid of the source of the moisture and clean up the mold.*

Essential Oils

Do not add essential oils to the air purifier or filter. The filter will become damaged by the oil and will eventually release an unpleasant smell. **Do not** use oil diffusers near the air purifier.

LEVOIT REPLACEMENT FILTERS

Choose the filter best suited to the environment of your home.

Note: *Your air purifier comes with an Original Filter included.*

Levoit Core® 300-P Original Filter

Traps fine particles such as dust mites, pollen, pet dander, and bacteria while neutralizing common household smells such as pet odors or cooking smells.

Best used for: allergies, dust, minor odors

Levoit Core® 300-P 3-Stage Pet Allergy Filter

Get all the benefits of the Original Filter, with the addition of a High-Efficiency Activated Carbon Filter which is very effective for strong smells, and is customized to address pet odors and cooking smells.

Best used for: pet allergies, unwanted odors

Levoit Core® 300-P 3-Stage Toxin Absorber Filter

Get all the benefits of the Original Filter, with the addition of a High-Efficiency Activated Carbon Filter which is very effective for strong smells, and is customized to address air pollution, cigarette smoke, vehicle exhaust, toxic gases and fumes, volatile organic compounds (VOCs), and smoke from wildfires.

Best used for: high air pollution, smoke

CARE & MAINTENANCE

Cleaning the Air Purifier

Note: Do not *clean with abrasive chemicals or flammable cleaning agents.*

1. Unplug before cleaning.
2. Wipe the outside of the air purifier with a soft, dry cloth. If necessary, wipe the housing with a damp cloth, then immediately dry.
3. Vacuum the inside of the air purifier.

Check Filter Indicator

will light up as a reminder to check the filter. Depending on how much you use the air purifier, the indicator should turn on within 6–8 months. You may not need to replace your filter yet, but you should check it when turns on.

Cleaning the Filter

The outer pre-filter should be cleaned every 2–4 weeks to increase the efficiency and extend the life of your filter. Clean the pre-filter using a soft brush or vacuum hose to remove hair, dust, and large particles. ***[Figure 3.1]*** **Do not** clean the filter with water or other liquids.

Note: Do not *clean the Original / Activated Carbon Filters.*

Resetting the Check Filter Indicator

Reset the Check Filter Indicator when:

A. lights up.

1. Replace the filter. (see page 14)
2. Turn on the air purifier.
3. Press and hold for 3 seconds.
4. will turn off when successfully reset.

B. The filter was changed before lit up.

1. Press and hold for 3 seconds. This will turn on .
2. Press and hold again for 3 seconds.
3. will turn off when successfully reset.

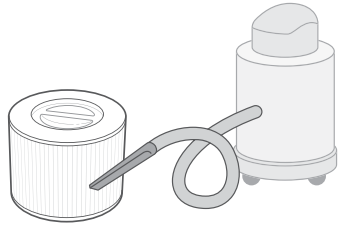

Figure 3.1

Filter	When to Clean	How to Clean	When to Replace
Pre-Filter	Every 2–4 weeks	Use a soft brush or vacuum hose ***[Figure 3.1]***	6–8 months
Original Filter & Activated Carbon Filter	**Do not** clean		

When Should I Replace the Filter?

The filter should be replaced every 6–8 months. You may need to replace your filter earlier or later depending on how often you use your air purifier. Using your air purifier in an environment with relatively high pollution may mean you will need to replace the filter more often, even if is off.

You may need to replace your filter if you notice:

- Increased noise when the air purifier is on
- Decreased airflow
- Unusual odors
- A visibly clogged filter

Note:

- *To maintain the performance of your air purifier,* **only** *use official Levoit filters. For more information, contact* ***Customer Support*** *(see page 19).*
- *Remember to reset after changing the filter.*

Replacing the Filter

1. Unplug the air purifier. Flip the air purifier over and remove the filter cover (see **Getting Started**, page 7).
2. Remove the old filter.
3. Clean out any remaining dust or hair inside the purifier using a vacuum hose. **Do not** use water or liquids to clean the purifier. *[Figure 3.2]*
4. Unwrap the new filter and place it into the housing (see **Getting Started**, page 7).
5. Replace the filter cover. The air purifier will not power on unless the cover is replaced correctly.
6. Plug in and turn on the air purifier.
7. Reset the Check Filter Indicator (see page 13).

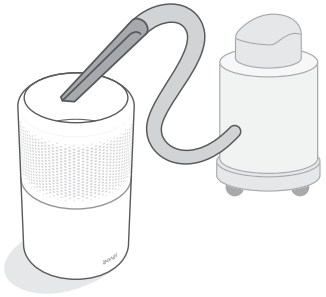

Figure 3.2

Storage

If not using the air purifier for an extended period of time, wrap both the air purifier and the filter in plastic packaging and store in a dry place to avoid moisture damage.

TROUBLESHOOTING

Problem	Possible Solution
Air purifier will not turn on or respond to button controls.	Plug in the air purifier.
	Check to see if the power cord is damaged. If it is, stop using the air purifier and contact **Customer Support** (see page 19).
	Plug the air purifier into a different outlet.
	The air purifier is malfunctioning. Contact **Customer Support** (see page 19).
Airflow is significantly reduced.	Make sure the filter is removed from its packaging and properly in place (see page 7).
	Tap to increase the fan speed.
	Leave 15 inches / 38 cm of clearance on all sides of the air purifier.
	The pre-filter may be clogged by large particles, such as hair or lint, blocking airflow. Clean the pre-filter (see page 13).
	Replace the filter (see page 14).
Air purifier makes an unusual noise while the fan is on.	Make sure the filter is properly in place with plastic packaging removed (see page 7).
	Make sure the air purifier is operating on a hard, flat, even surface.
	Replace the filter (see page 14).
	The air purifier may be damaged, or a foreign object may be inside. Stop using the air purifier and contact **Customer Support** (see page 19). **Do not** try to repair the air purifier.
Strange smell coming from the air purifier.	Clean the filter or replace if necessary.
	Contact **Customer Support** (see page 19).
	Make sure not to use your air purifier in an area with high humidity or while diffusing essential oils.

Problem	Possible Solution
Poor air purification quality.	Tap to increase the fan speed.
	Make sure no objects are blocking the sides or top of the air purifier (the inlet or outlet).
	Make sure the filter is removed from its packaging and properly in place (see page 7).
	Close doors and windows while using the air purifier.
	If the room is larger than 219 ft^2 / 20 m^2, air purification will take longer.
	Replace the filter (see page 14).
is still on after replacing the filter.	Reset the Check Filter Indicator (see page 13).
has not turned on within 8 months.	is a reminder for you to check the filter and will light up based on how much the air purifier has been used (see page 13). If you don't use your air purifier often, will take longer to turn on.
turned on before 6 months.	is a reminder for you to check the filter and will light up based on how much the air purifier has been used (see page 13). If you run your air purifier frequently, will turn on sooner.

If your problem is not listed, please contact **Customer Support** (see page 19).

FEDERAL COMMUNICATION COMMISSION INTERFERENCE STATEMENT

This device complies with Part 15 of the FCC Rules. Operation is subject to the following two conditions:

1. This device may not cause harmful interference, and
2. This device must accept any interference received, including interference that may cause undesired operation.

NOTE: This equipment has been tested and found to comply with the limits for a Class B digital device, pursuant to Part 15 of the FCC Rules. These limits are designed to provide reasonable protection against harmful interference in a residential installation. This equipment generates, uses and can radiate radio frequency energy and, if not installed and used in accordance with the instructions, may cause harmful interference to radio communications. However, there is no guarantee that interference will not occur in a particular installation. If this equipment does cause harmful interference to radio or television reception, which can be determined by turning the equipment off and on, the user is encouraged to try to correct the interference by one or more of the following measures:

- Reorient or relocate the receiving antenna.
- Increase the separation between the equipment and receiver.
- Connect the equipment into an outlet on a circuit different from that to which the receiver is connected.
- Consult the dealer or an experienced radio/TV technician for help.

FCC Caution: Any changes or modifications not expressly approved by the party responsible for compliance could void the user's authority to operate this equipment.

WARRANTY INFORMATION

Product	Levoit Core® 300-P Air Purifier
Model	Core 300, Core 300-RAC
For your own reference, we strongly recommend that you record your order ID and date of purchase.	
Order ID	
Date of Purchase	

Terms & Policy

Arovast Corporation ("Arovast") warrants this product to the original purchaser to be free from defects in material and workmanship, under normal use and conditions, for a period of 2 years from the date of original purchase.

Arovast agrees, at our option during the warranty period, to repair any defect in material or workmanship or furnish an equal product in exchange without charge, subject to verification of the defect or malfunction and proof of the date of purchase.

There is no other express warranty. This warranty does not apply:

- If the product has been modified from its original condition;
- If the product has not been used in accordance with directions and instructions in the user manual;
- To damages or defects caused by accident, abuse, misuse or improper or inadequate maintenance;
- To damages or defects caused by service or repair of the product performed by an unauthorized service provider or by anyone other than Arovast;
- To damages or defects occurring during commercial use, rental use, or any use for which the product is not intended;
- To damages or defects exceeding the cost of the product.

Arovast will not be liable for indirect, incidental, or consequential damages in connection with the use of the product covered by this warranty.

This warranty extends only to the original consumer purchaser of the product and is not transferable to any subsequent owner of the product regardless of whether the product is transferred during the specified term of the warranty.

This warranty does not extend to products purchased from unauthorized sellers. Arovast's warranty extends only to products purchased from authorized sellers that are subject to Arovast's quality controls and have agreed to follow its quality controls.

All implied warranties are limited to the period of this limited warranty.

This warranty gives you specific legal rights and you may also have other rights which vary from state to state. Some states do not allow the exclusion or limitation of incidental or consequential damages, so the above limitation or exclusion may not apply to you.

If you discover that your product is defective within the specified warranty period, please contact Customer Support via **support@levoit.com. DO NOT** dispose of your product before contacting us. Once our Customer Support Team has approved your request, please return the product with a copy of the invoice and order ID.

Every Levoit product automatically includes a 2-year warranty. To make the customer support process quick and easy, register your product online at **www.levoit.com/warranty**.

This warranty is made by:

Arovast Corporation
1202 N. Miller St. Suite A
Anaheim, CA 92806

CUSTOMER SUPPORT

If you have any questions or concerns about your new product, please contact our helpful Customer Support Team.

Arovast Corporation
1202 N. Miller St., Suite A
Anaheim, CA 92806

Email: support@levoit.com
Toll-Free: (888) 726-8520

Support Hours

Mon–Fri, 9:00 am–5:00 pm PST/PDT

*Please have your order invoice and order ID ready before contacting Customer Support.

levoit®

 /LEVOIT

 /LEVOIT

 /LEVOITLIFESTYLE

 /LEVOITLIFESTYLE

 /LEVOITLIFESTYLE

 LEVOIT.COM

OM082721AC-M1_0621Core300