KidKraft
MADE FOR MAKE BELIEVE™

F29440

RANGER RETREAT PLAYSET

MISSING SOMETHING? CALL US OR GO ONLINE

OBSTACLE FREE SAFETY ZONE - 29'- 8" L x 22'-10" D x 15'-11" H (9 x 7 x 4.87 m) area requires Protective Surfacing. See page 4.
MAXIMUM VERTICAL FALL HEIGHT - 9'-2" (2.8m).
CAPACITY - 9 Users Maximum, Ages 3 - 10; Weight Limit 110 lbs. (50 kg) per child.
RESIDENTAL HOME USE ONLY. Not intended for public areas such as multi-unit residences, schools, churches, nurseries, day cares or parks.



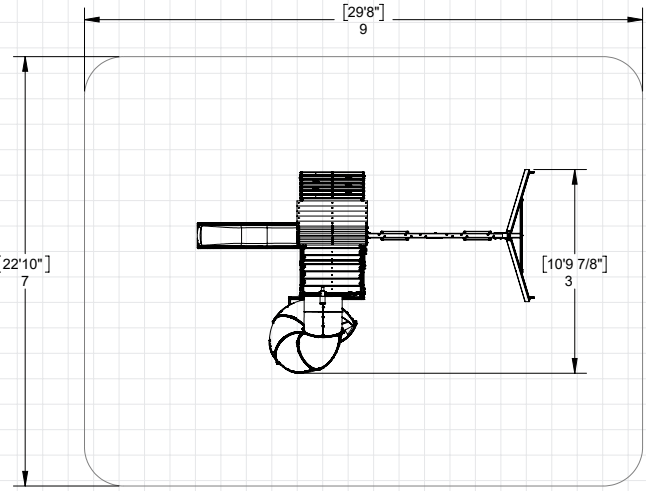

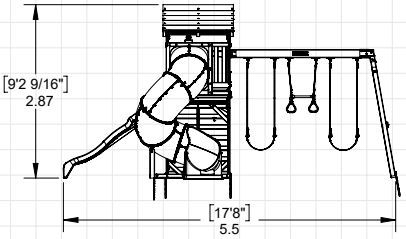

INSTALLATION AND OPERATING INSTRUCTIONS

FOR 24/7 ONLINE PARTS REPLACEMENT

parts.kidkraft.com

KidKraft, Inc.
4630 Olin Road
Dallas, Texas 75244
USA

customerservice@kidkraft.com

1.800.933.0771
972.385.0100

parts.kidkraft.eu

KidKraft Netherlands BV
Olympisch Stadion 8
1076 DE Amsterdam
The Netherlands

europecustomerservice@kidkraft.com

+31 20 305 8620
M-F from 09:00 to 17:30 (GMT+1)

9409440 Rev 07/25/2022

TWO-PERSON ASSEMBLY

ASSEMBLY TIME 10 - 14 HOURS

WARNING. ONLY FOR OUTDOOR DOMESTIC USE

⚠ WARNING

To reduce the risk of serious injury or death, please read and follow these instructions. Keep and refer to instructions as needed and pass along to any future owners of this item.

Congratulations on purchasing a KidKraft product!

Our items are made of high-quality, durable Cunninghamia Lanceolata wood from the cypress family.

Lumber from these trees are known for their light weight and excellent strength. The porosity of this wood allows the moisture to absorb and evaporate in the fibers, resisting rot and bugs.

Engineered for great play, our products also go through extensive testing for safety.

Plus, our team has developed a series of proprietary methods for a simpler, more organized assembly. Less build time and more play time is our motto!

However, during assembly if you have any questions or concerns, please reach out. Our Customer Service can help with missing parts, instructions or maintenance.

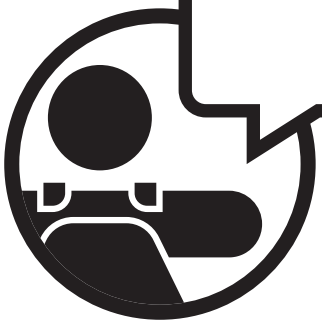

Warnings and Safe Play Instructions

CONTINUOUS ADULT SUPERVISION REQUIRED. Most serious injuries and deaths on playground equipment have occurred while children were unsupervised! Our products are designed to meet mandatory and voluntary safety standards. Complying with all warnings and recommendations in these instructions will reduce the risk of serious or fatal injury to children using this play system. Go over the warnings and safe play instructions regularly with your children and make certain that they understand and follow them. Remember on-site adult supervision is required for children of all ages.

WARNING

SERIOUS HEAD INJURY HAZARD
Installation over concrete, asphalt, dirt, grass, carpet and other hard surface creates a risk of serious injury or death from falls to the ground. Install and maintain shock absorbing material under and around play-set as recommended on page 3 of these instructions.

COLLISION HAZARD
Place play-set on level ground at least 2m from any obstruction such as a garage or house, fences, poles, trees, sidewalks, walls, landscape timbers, rocks, pavement, planters, garden borders, overhanging branches, laundry lines, and electrical wires. (See OBSTACLE FREE SAFETY ZONE on cover)

CHOKING HAZARD/SHARP EDGES & POINTS
Adult assembly required. This product contains small parts and parts with sharp edges and points. Keep parts away from children until fully assembled.

WARNING LABEL
Owners shall be responsible for maintaining the legibility of the warning labels.

STRANGULATION HAZARD
- NEVER allow children to play with ropes, clotheslines, pet leashes, cables, chains or cord-like items when using this play-set or to attach these items to play-set.
- NEVER allow children to wear loose fitting clothing, ponchos, hoods, scarves, capes, necklaces, items with draw-strings, cords or ties when using this play-set.
- NEVER allow children to wear bike or sport helmets when using this play-set.

Failure to prohibit these items, even helmets with chin straps, increases the risk of serious injury and death to children from entanglement and strangulation.

TIP OVER HAZARD
Choose a level location for the equipment. This can reduce the likelihood of the play set tipping over and loose-fill surfacing materials washing away during heavy rains.

DO NOT allow children to play on the play-set until the assembly is complete and the unit is properly anchored.

Never add extra length to chain or rope. The chains or ropes provided are the maximum length designed for the swinging element(s).

WARNING – Safe Play Instructions

- ✓ Observe capacity limitations of your play-set. See front cover.
- ✓ Dress children with well fitting and full foot enclosing footwear.
- ✓ Teach children to sit with their full weight in the center of the swing seat to prevent erratic swing motion or falling off.
- ✓ Check for splintered, broken or cracked wood; missing, loose, or sharp edged hardware. Replace, tighten and or sand smooth as required prior to playing.
- ✓ Verify that suspended climbing ropes, rope ladders, chain or cable are secured at both ends and cannot be looped back on itself as to create an entanglement hazard.
- ✓ On sunny and or hot days, check the slide and other plastic rides to assure that they are not very hot as to cause burns. Cool hot slide and rides with water and wipe dry prior to using.
- ✓ Orientate slide such that it gets the least amount of exposure to the sun.
- ✗ Do not allow children to wear open toe or heel footwear like sandals, flip–flops or clogs.
- ✗ Do not allow children to walk, in front, between, behind or close to moving rides.
- ✗ Do not let children twist swing chains or ropes or loop them over the top support bar. This may reduce the strength of the chain or rope and cause premature failure.
- ✗ Do not let children get off rides while they are in motion.
- ✗ Do not permit climbing on equipment when it is wet.
- ✗ Do not permit rough play or use of equipment in a manner for which it was not intended. Standing on or jumping from the roof, elevated platforms, swings, climbers, ladders or slide can be dangerous.
- ✗ Do not allow children to swing empty rides or seats.
- ✗ Do not allow children to go down slide head first or run up slide.

⚠Protective Surfacing - Reducing Risk of Serious Head Injury From Falls

One of the most important things you can do to reduce the likelihood of serious head injuries is to install shock-absorbing protective surfacing under and around your play equipment. The protective surfacing should be applied to a depth that is suitable for the equipment height in accordance with ASTM F1292. There are different types of surfacing to choose from; whichever product you select, follow these guidelines:

Loose-Fill Materials

- Maintain a minimum depth of 9 inches (23 cm) of loose-fill materials such as wood mulch/chips, engineered wood fiber (EWF), or shredded/recycled rubber mulch for equipment up to 8 feet (2.45 m) high; and 9 inches (23 cm) of sand or pea gravel for equipment up to 5 feet (1.5 m) high. NOTE: An initial fill level of 12 inches (31 cm) will compress to about a 9-inch (23 cm) depth of surfacing over time. The surfacing will also compact, displace, and settle, and should be periodically raked and refilled to maintain at least a 9-inch (23 cm) depth.
- Use a minimum of 6 inches (16 cm) of protective surfacing for play equipment less than 4 feet (1.22 m) in height. If maintained properly, this should be adequate. (At depths less than 6 inches (16 cm), the protective material is too easily displaced or compacted.)

NOTE: Do not install home playground equipment over concrete, asphalt, or any other hard surface. A fall onto a hard surface can result in serious injury to the equipment user. Grass and dirt are not considered protective surfacing because wear and environmental factors can reduce their shock absorbing effectiveness. Carpeting and thin mats are not adequate protective surfacing. Ground level equipment -- such as a sandbox, activity wall, playhouse or other equipment that has no elevated play surface -- does not need any protective surfacing.

- Use containment, such as digging out around the perimeter and/or lining the perimeter with landscape edging. Don't forget to account for water drainage.
- Periodically rake, check and maintain the depth of the loose-fill surfacing material. Marking the correct depth on the play equipment support posts will help you to see when the material has settled and needs to be raked and or replenished. Be sure to rake and evenly redistribute the surfacing in heavily used areas.
- Do not install loose fill surfacing over hard surfaces such as concrete or asphalt.

Poured-In-Place Surfaces or Pre-Manufactured Rubber Tiles

You may be interested in using surfacing other than loose-fill materials - like rubber tiles or poured-in-place surfaces.

- Installations of these surfaces generally require a professional and are not "do-it yourself" projects.
- Review surface specifications before purchasing this type of surfacing. Ask the installer/manufacturer for a report showing that the product has been tested to the following safety standard: ASTM F1292 *Standard Specification for Impact Attenuation of Surfacing Materials within the Use Zone of Playground Equipment*. This report should show the specific height for which the surface is intended to protect against serious head injury. This height should be equal to or greater than the fall height - vertical distance between a designated play surface (*elevated surface for standing, sitting, or climbing*) and the protective surfacing below - of your play equipment.
- Check the protective surfacing frequently for wear.

Placement

Proper placement and maintenance of protective surfacing is essential. Refer to diagram on front cover. Be sure to;

- Extend surfacing at least 6 feet (1.8 m) from the equipment in all directions.
- For to-fro swings, extend protective surfacing in front of and behind the swing to a distance equal to twice the height of the top bar from which the swing is suspended.
- For tire swings, extend surfacing in a circle whose radius is equal to the height of the suspending chain or rope, plus 6 feet (1.8 m) in all directions.

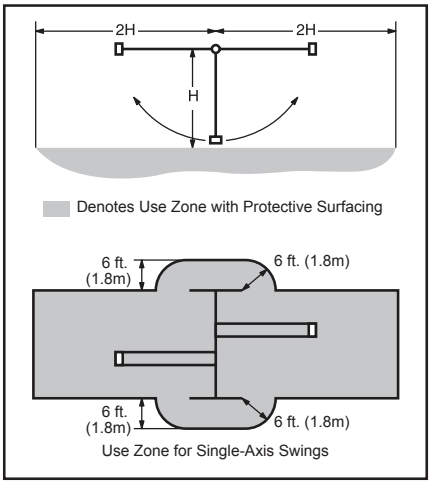

Use Zone for Single-Axis Swings

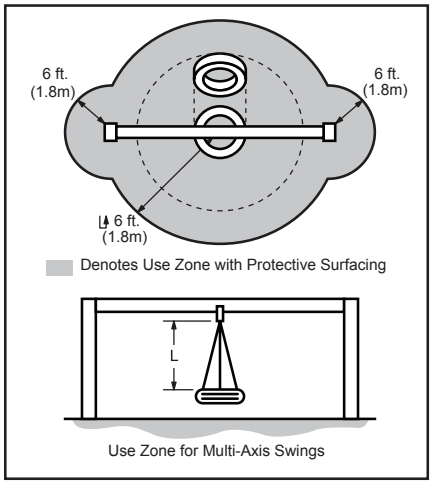

Use Zone for Multi-Axis Swings

From the CPSC Outdoor Home Playground Safety Handbook. At http://www.playgroundregs.com/resources/CPSC%20324.pdf

Instructions for Proper Maintenance

Your KidKraft Play System is designed and constructed of quality materials with your child's safety in mind. As with all outdoor products used by children, it will weather and wear. To maximize the enjoyment, safety and life of your Play Set, it is important that you, the owner, properly maintain it.

Check the following at the beginning of the play season:

HARDWARE:

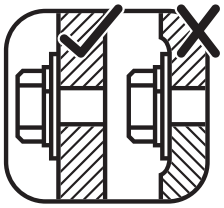

- ✓ Check metal parts for rust. If found, sand and repaint using a non-lead paint complying with 16 CFR 1303.
- ✓ Inspect and tighten all hardware. On wood assemblies DO NOT OVER-TIGHTEN as to cause crushing and splintering of wood.
- ✓ Check for sharp edges or protruding screw threads, add washers if required.

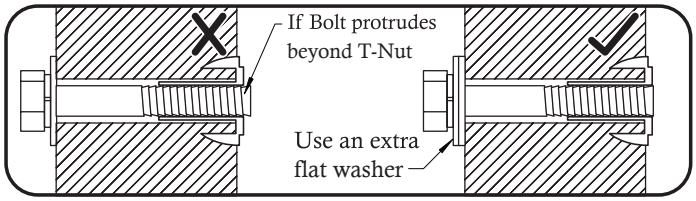

SHOCK ABSORBING SURFACING:

- ✓ Check for foreign objects. Rake and check depth of loose fill protective surfacing materials to prevent compaction and maintain appropriate depth. Replace as necessary. (See Protective Surfacing, page 3)

GROUND STAKES (ANCHORS):

- ✓ Check for looseness, damage or deterioration. Should firmly anchor unit to ground during use. Re-secure and or replace, if necessary.

SWING HANGERS:

- ✓ Check that bolts are secure and tight. Quick clips should be completely closed and threaded clips screwed tight.
- ✓ If squeaking occurs lubricate bushings with oil or WD-40®.

SWINGS, ROPES AND RIDES:

- ✓ Reinstall if removed during cold season. Check all moving parts including swing seats, ropes, chains and attachments for wear, rust and other deterioration. Replace as needed.
- ✓ Check that ropes are tight, secure at both ends and cannot loop back as to create an entrapment.

WOOD PARTS:

- ✓ Check all wood members for deterioration, structural damage and splintering. Sand down splinters and replace deteriorated wood members. As with all wood, some checking and small cracks in grain is normal.
- ✓ Applying a water repellent or stain (water-based) on a yearly basis is important maintenance to maintain maximum life and performance of the product.

Check twice a month during play season:

HARDWARE:

- ✓ Inspect for tightness. Must be firmly against, but not crushing the wood. DO NOT OVER-TIGHTEN. This will cause splintering of wood.
- ✓ Check for sharp edges or protruding screw threads. Add washers if required.

SHOCK ABSORBING SURFACING:

- ✓ Rake and check depth of loose fill protective surfacing materials to prevent compaction and maintain appropriate depth. Replace as necessary. (See Protective Surfacing, page 3)

Check once a month during play season:

SWING HANGERS:

- ✓ Check that they are secure and orientated correctly. Hook should rotate freely and perpendicular to support beam.
- ✓ If squeaking occurs lubricate bushings with oil or WD-40®.

SWINGS AND RIDES:

- ✓ Check swing seats, all ropes, chains and attachments for fraying, wear, excessive corrosion or damage. Replace if structurally damaged or deteriorated.

Check at the end of the play season:

SWINGS AND RIDES:

- ✓ To prolong their life, remove swings and store inside when outside temperature is below 32°F/0°C. Below freezing, plastic parts may become more brittle.

SHOCK ABSORBING SURFACING:

- ✓ Rake and check depth of loose fill protective surfacing materials to prevent compaction and maintain appropriate depth. Replace as necessary. (See Protective Surfacing, page 3)

If you dispose of your play set: Please disassemble and dispose of your unit so that it does not create any unreasonable hazards at the time it is discarded. Be sure to follow your local waste ordinances.

About Our Wood

KidKraft Premium Play Systems uses only premium playset lumber, ensuring the safest product for your children's use. Although we take great care in selecting the best quality lumber available, wood is still a product of nature and susceptible to weathering which can change the appearance of your set.

What causes weathering? Does it affect the strength of my Play System?

One of the main reasons for weathering is the effects of water (moisture); the moisture content of the wood at the surface is different than the interior of the wood. As the climate changes, moisture moves in or out of the wood, causing tension which can result in checking and or warping. You can expect the following due to weathering. These changes will not affect the strength of the product:

1. **Checking** is surface cracks in the wood along the grain. A post 4" x 4" (101mm x 101mm) will experience more checking than a board 1" x 4" (25mm x 101mm) because the surface and interior moisture content will vary more widely than in

thinner wood.

2. **Warping** results from any distortion (twisting, cupping) from the original plane of the board and often happens from rapid wetting and drying of the wood.

3. **Fading** happens as a natural change in the wood color as it is exposed to sun-light and will turn a grey over time.

How can I reduce the amount of weathering to my Play System?

At the factory we have coated the wood with a water repellent or stain. This coating decreases the amount of water absorption during rain or snow thus decreasing the tension in the wood. Sunlight will break down the coating, so we recommend applying a water repellent or stain on a yearly basis (see your local stain and paint supplier for a recommended product).

Most weathering is just the normal result of nature and will not affect safe play and enjoyment for your child. However if you are concerned that a part has experienced a severe weathering problem please call our consumer relations department for further assistance.

Complete and mail registration card to receive important product notifications and assure prompt warranty service.

KidKraft Limited Warranty

MISSING OR DAMAGED PARTS:
KidKraft will replace any parts within 90 days from date of purchase found to be missing from or damaged in the original packaging. See Fig.1

Fig. 1	Product Age (All Parts)	Consumer Pays
	0-90 Days from date of purchase	$0 for Part + Free Shipping

DEFECTS IN MATERIAL AND WORKMANSHIP:
KidKraft warrants that this product is free from defects in materials and workmanship for a period of one (1) year from the original date of purchase (dated sales receipt and/or product registration is required). This one (1) year warranty covers all parts including wood, hardware, and all accessories (Such as swings, rides, and slides). See Fig. 2

Fig. 2	Product Age (All Parts)	Consumer Pays
	91 Days to 1 Year	$0 for Part + Free Shipping

WOOD ROT, DECAY, AND INSECT DAMAGE:
All wood carries a five (5) year warranty against rot, decay, and insect damage (dated sales receipt and/or product registration is required). Refer to the schedule below for charges associated with replacement of wood parts under this **Limited Warranty.** See Fig. 3

Fig. 3	Product Age (Wood Parts)	Consumer Pays
	0 Days to 1 Year	$0 for Part + Free Shipping
	After 1 Year to 5 Year	$0 for Part + Shipping & Handling
	Over 5 Years	100% for Part (if available) + Shipping & Handling

This warranty applies to the original owner and registrant and is non-transferable. Regular maintenance is required to ensure the integrity of this product. Failure by the owner to maintain the product according to the maintenance requirements may void this warranty.

This Limited Warranty does NOT cover:

- Any inspection cost
- Labor and/or costs for replacement of any defective item(s), including but not limited to, professional installer costs
- Incidental or consequential damages, including but not limited to, as a result of set relocation, move and/or reinstall
- Cosmetic defects which do not affect performance or integrity of a part or the entire product
- Vandalism, improper use or installation, or acts of nature, including but not limited to, high winds, fire, and flood
- Minor twisting, warping, checking, or any natural occurring properties of wood that do not affect performance or integrity.
- Any KidKraft product purchased, including but not limited to, a non-approved retailer, auction houses, second-hand, and as-is clearance items.

KidKraft products have been designed for safety and quality. Modifications made to the original product may damage the structural integrity of the unit leading to failure and possible injury. KidKraft cannot assume any responsibility for the modified products. Furthermore, modifications void all warranties.

This product is warranted for **RESIDENTIAL USE ONLY.** Under no circumstance should a KidKraft product be used in public settings such as schools, churches, playgrounds, parks, home and professional day cares and the like. Such use may lead to product failure and potential injury. Public use will void this warranty. KidKraft disclaims all other representations and warranties of any kind, express or implied.

Keys to Assembly Success

Tools Required

• Tape Measure • Carpenters Level • Carpenters Square • Claw Hammer • Standard or Cordless Drill • Rubber Mallet	• #1 Phillips, #2 Robertson and Screwdriver • Ratchet with extension 1/2" (13mm) & 9/16"(14 mm) sockets	• Open End Wrench 1/2" (13mm) & 9/16"(14 mm) • Adjustable Wrench • 1/8"(3mm) & 3/16"(5mm) Drill Bits	• 3/16"(5mm) Hex Key • 8' (2.4m) Step Ladder • Safety Glasses • Adult Helpers • Pencil

Part Identification Key
On each page, you will find the parts and quantities required to complete the assembly step illustrated on that page. Here is a sample.

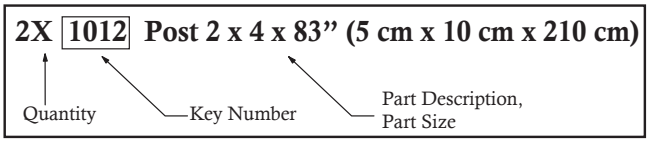

Symbols
Throughout these instructions symbols are provided as important reminders for proper and safe assembly.

This identifies information that requires special attention. Improper assembly could lead to an unsafe or dangerous condition.

Use Help Use Help

Where this is shown, 2 or 3 people are required to safely complete the step. To avoid injury or damage to the assembly make sure to get help!

Measure Distance

Use a measuring tape to assure proper location.

Check that assembly is square before tightening bolts.

Square Assembly

Check that set or assembly is properly level before proceeding.

Use Level

Pre-drill 1/8"(3mm) & 3/16"(5mm) Bit

1/8 3mm 3/16 5mm

Pre-drill a pilot hole before fastening screw or lag to prevent splitting of wood.

This indicates time to tighten bolts, but not too tight! Do not crush the wood. This may create splinters and cause structural damage.

Tighten Bolts

CAUTION – Protrusion Hazard

Once the assembly is tightened, watch for exposed threads. If a thread protrudes from the T-Nut, remove the bolt and add washers to eliminate this condition. Extra washers have been provided for this purpose.

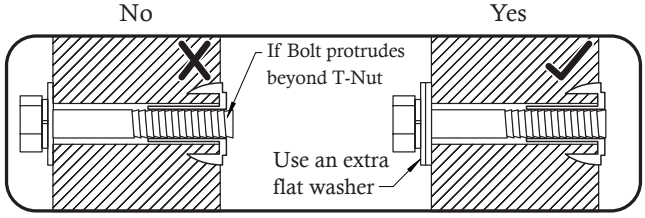

Proper Hardware Assembly
Lag screws require drilling pilot holes to avoid splitting wood. Only a flat washer is required. For ease of installation liquid soap can be used on all lag-type screws.

For bolts, tap T-Nut into hole with hammer. Insert the hex bolt through lock washer first then flat washer then hole. Because the assemblies need to be squared do not completely tighten until instructed. Pay close attention to diameter of the bolts. 5/16" (8mm) is slightly larger than 1/4" (6.4mm).

Note: Wafer head bolts with blue lock tight or a bolt with a Ny-Lok nut do NOT require a lock washer.

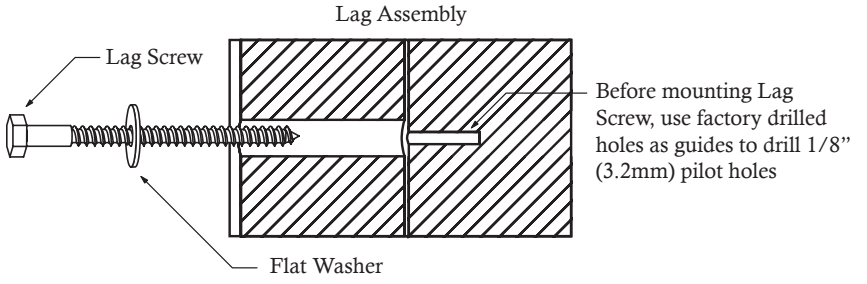

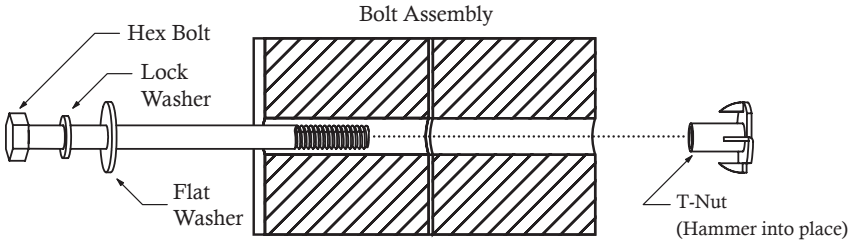

Part Identification (Reduced Size)

1x - 2614 - 76.2 x 133.4 x 2235.2 mm - 3832614

3" X 5 1/4" X 88"

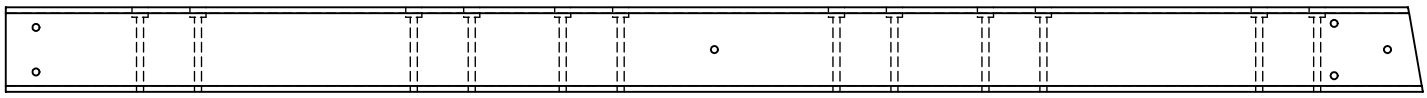

1x - 2615 - 76.2 x 76.2 x 1294.3 mm - 3832615

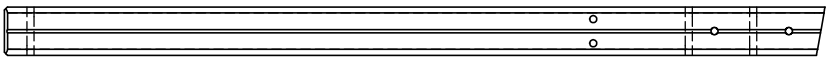

3" X 3" X 50 15/16"

1x - 2616 - 23.8 x 82.6 x 1181.1 mm - 3832616

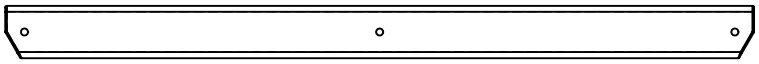

15/16" X 3 1/4" X 46 1/2"

2x - 10523 - 50.8 x 76.2 x 2063.9 mm - 38310523

2" X 3" X 81 1/4"

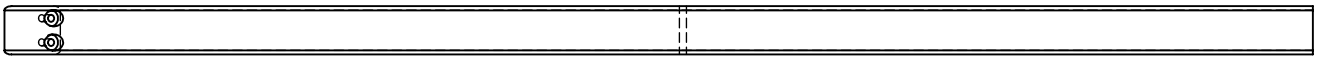

4x - 10730 - 34.9 x 85.7 x 1326.6 mm - 38310730

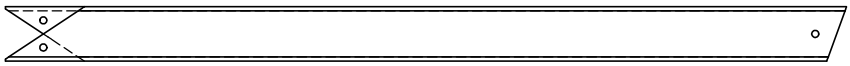

1 3/8" X 3 3/8" X 52 1/4"

2x - 10731 - 25.4 x 63.5 x 2027 mm - 38310731

1" X 2 1/2" X 79 13/16"

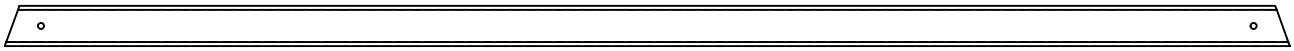

4x - 10732 - 34.9 x 85.7 x 1756.2 mm - 38310732

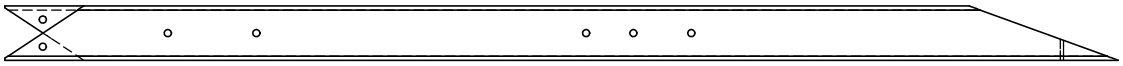

1 3/8" X 3 3/8" X 69 1/8"

2x - 10733 - 25.4 x 63.5 x 1206.5 mm - 35810733

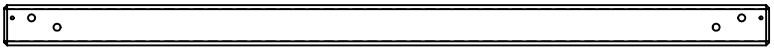

1" X 2 1/2" X 47 1/2"

2x - 10734 - 25.4 x 63.5 x 914.4 mm - 35810734

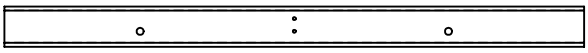

1" X 2 1/2" X 36"

1x - 10735 - 34.9 x 63.5 x 1155.7 mm - 35810735

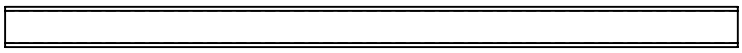

1 3/8" X 2 1/2" X 45 1/2"

Part Identification (Reduced Size)

14x - 10736 - 15.9 x 114.3 x 963 mm - 35810736

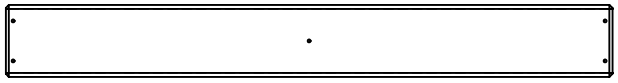

5/8" X 4 1/2" X 37 15/16"

2x - 10737 - 15.9 x 53.5 x 963 mm - 35810737

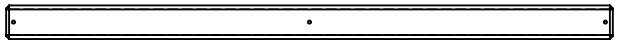

5/8" X 2 1/8" X 37 15/16"

7x - 10738 - 15.9 x 114.3 x 1035 mm - 35810738

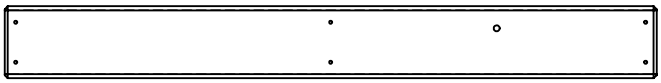

5/8" X 4 1/2" X 40 3/4"

1x - 10739 - 23.8 x 76.2 x 1404.3 mm - 35810739

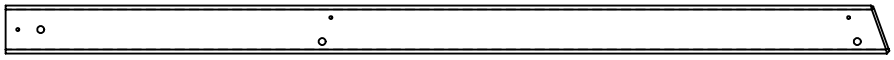

15/16" x 3" x 55 5/16"

1x - 10740 - 34.9 x 63.5 x 1236 mm - 35810740

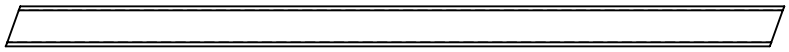

1 3/8" X 2 1/2" X 48 11/16"

3x - 10741 - 25.4 x 63.5 x 491.3 mm - 35810741

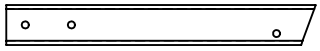

1" X 2 1/2" X 19 5/16"

1x - 10742 - 23.8 x 76.2 x 1169.7 mm - 35810742



15/16" X 3" X 46"

2x - 10743 - 15.9 x 25.4 x 1080 mm - 38310743



5/8" X 1" X 42 1/2"

1x - 10744 - 25.4 x 63.5 x 1035 mm - 35810744

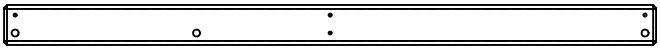

1" X 2 1/2" X 40 3/4"

1x - 10745 - 23.8 x 76.2 x 568.7 mm - 35810745

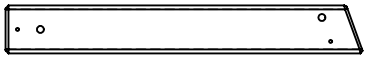

15/16" X 3" X 22 5/16"

1x - 10746 - 23.8 x 76.2 x 1169.7 mm - 35810746

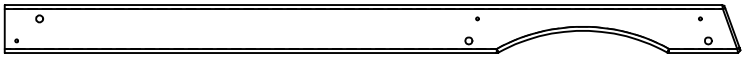

15/16" X 3" X 46"

1x - 10747 - 25.4 x 63.5 x 1035 mm - 35810747

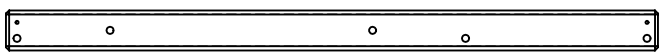

1" X 2 1/2" X 40 3/4"

Part Identification (Reduced Size)

2x - 10748 - 25.4 x 63.5 x 850.9 mm - 35810748

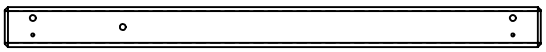

1" X 2 1/2" X 33 1/2"

1x - 10749 - 50.8 x 79.4 x 747 mm - 35810749

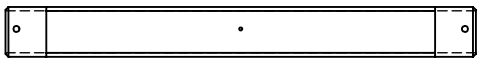

2" X 3 1/8" X 29 7/16"

1x - 10750 - 25.4 x 63.5 x 620 mm - 35810750

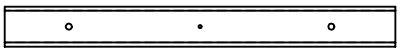

1" X 2 1/2" X 24 7/16"

13x - 10751 - 15.9 x 63.5 x 700 mm - 35810751

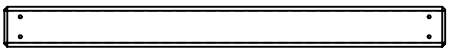

5/8" X 2 1/2" X 27 9/16"

1x - 10752 - 31.8 x 31.8 x 450 mm - 35810752

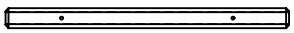

1 1/4" X 1 1/4" X 17 11/16"

1x - 10753 - 25.4 x 63.5 x 1189.8 mm - 38310753



1" X 2 1/2" X 46 13/16"

1x - 10754 - 31.8 x 63.5 x 317.2 mm - 38310754



1 1/4" X 2 1/2" X 12 1/2"

2x - 10755 - 25.1 x 63.5 x 500 mm - 38310755

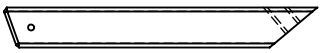

1" X 2 1/2" X 19 9/16"

2x - 10756 - 25.4 x 50.8 x 240 mm - 38310756

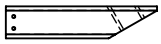

1" X 2" X 9 7/16"

2x - 10757 - 15.9 x 63.5 x 390.6 mm - 38310757

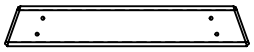

5/8" X 2 1/2" X 15 3/8"

2x - 10758 - 15.9 x 63.5 x 298.2 mm - 38310758

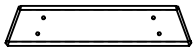

5/8" X 2 1/2" X 11 3/4"

1x - 10759 - 25.4 x 88.9 x 338.4 mm - 35810759

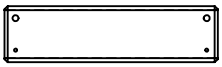

1" X 3 1/2" X 13 5/16"

1x - 10760 - 15.9 x 114.3 x 1035 mm - 38310760

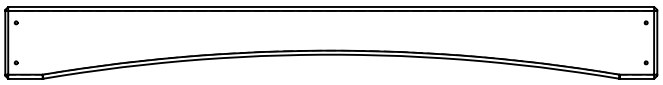

5/8" X 4 1/2" X 40 3/4"

2x - 10761 - 15.9 x 63.5 x 700 mm - 35810761

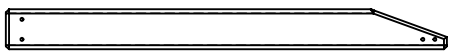

5/8" X 2 1/2" X 27 9/16"

Part Identification (Reduced Size)

1x - 10762 - 31.8 x 133.4 x 608 mm - 38310762

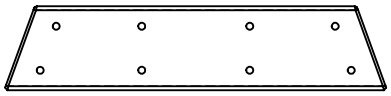

1 1/4" X 5 1/4" X 23 13/16"

3x - 10763 - 15.9 x 63.5 x 1035 mm - 35810763

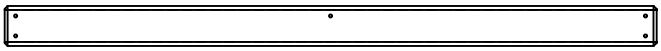

5/8" X 2 1/2" X 40 3/4"

1x - 10764 - 31.8 x 63.5 x 317.2 mm - 38310764



1 1/4" X 2 1/2" X 12 1/2"

2x - 10765 - 15.9 x 63.5 x 293 mm - 35810765

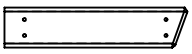

5/8" x 2 1/2" x 11 9/16"

1x - 10766 - 31.8mm x 63.5 x 710 mm - 38310766

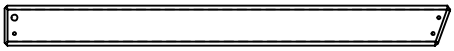

1 1/4" x 2 1/2" x 27 15/16"

1x - 10767 - 31.8 x 76.2 x 465 mm - 38310767



1 1/4" x 3" x 18 5/16"

4x - 10768 - 31.8 x 63.5 x 433 mm - 38310768

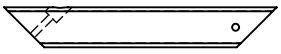

1 1/4" X 2 1/2" X 17 1/16"

2x - 10769 - 34.9 x 85.7 x 850.9 mm - 35810769

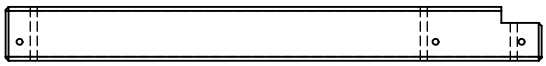

1 3/8" X 3 3/8" X 33 1/2"

1x - 10770 - 15.9 x 114.3 x 1087.1 mm - 35810770



5/8" X 4 1/2" X 42 13/16"

2x - 10771 - 31.8 x 63.5 x 577.3 mm - 38310771

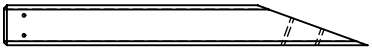

1 1/4" X 2 1/2" X 22 3/4"

2x - 10772 - 25.4 x 34.9 x 147 mm - 38310772

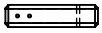

1" X 1 3/8" X 5 13/16"

1x - 10988 - 23.8 x 63.5 x 285mm - 35810988

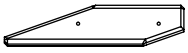

15/16" x 2 1/2" x 11 1/4"

Part Identification (Reduced Size)

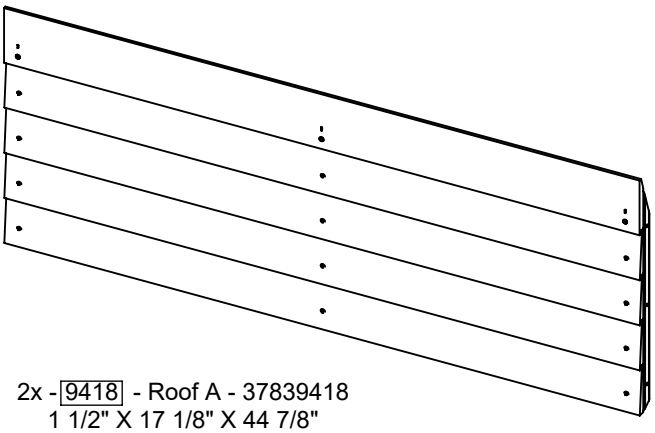

2x - 9418 - Roof A - 37839418
1 1/2" X 17 1/8" X 44 7/8"
38.1 x 435.7 x 1140.6 mm

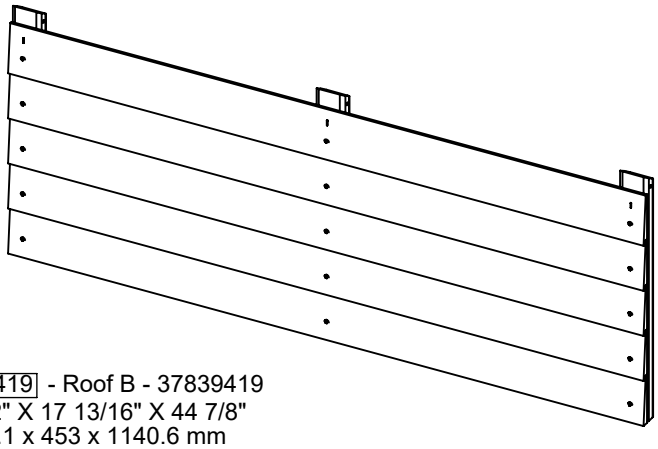

1x - 9419 - Roof B - 37839419
1 1/2" X 17 13/16" X 44 7/8"
38.1 x 453 x 1140.6 mm

Hardware Identification (Actual Size)

37 x (FW0) - 3/16" - 51103100
4.8mm

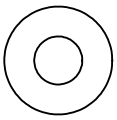

114 x (FW2) - 5/16" - 51103300
7.9mm

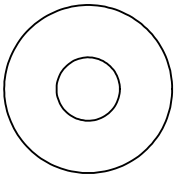

27 x (LN2) - 5/16" - 54303300
7.9mm

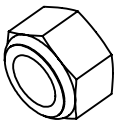

1 x [TN1] - 1/4" - 54503200
6.4mm

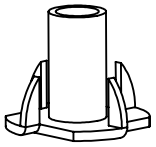

6 x (FW1) - 1/4" - 51103200
6.4mm

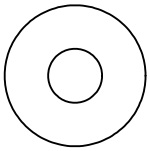

6 x (LW1) - 1/4" - (51303200)
6.4mm



64 x (LN1) - 1/4" - 54303200
6.4mm

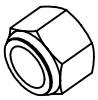

54 x [TN2] - 5/16" - 54503300
7.9mm

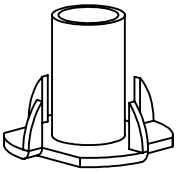

8 x (FW6) - #12 - 9299500

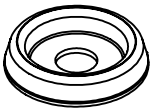

68 x (LW2) - 5/16" - (51303300)
7.9mm

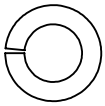

5 x [BN1] - 1/4" - 54803200
6.4mm

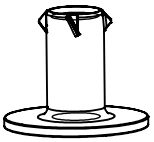

33 x (S0) - #8 x 7/8" - 52933505
22.2mm



18 x (S6) - #12 x 1" - 52433610
25.4mm

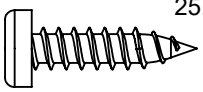

55 x (S7) - #12 x 2" - 52433620
50.8mm

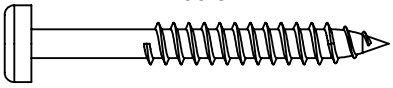

5 x (S10) - #8x 1" - 52433510
25.4mm

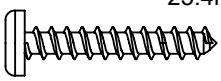

1 x (S37) - #7 x 5/8" - 52433009

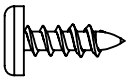

4 x (S18) - #6 x 1" - 52013910
25.4mm



158 x (S20) - #8 x 1-3/8" - 52043516
34.9mm



27 x (S2) - #8 x 1-1/2" - 52043512
38.1mm



8 x (S3) - #8 x 2-1/2" - 52043522
63.5mm



10 x (S15) - #8 x 1-3/4" - 52043513
44.5mm

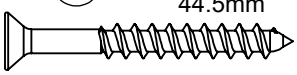

39 x (S11) - #8 x 2" - 52043520
50.8mm

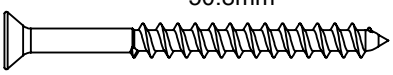

6 x (S5) - #8 x 1/2" - 52433502
12.7mm

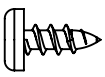

32 x (S4) - #8 x 3" - 52043530
76.2mm



14 x (WL5) - 1/4 x 2-1/2" - 52613222
6.4 x 63.5mm

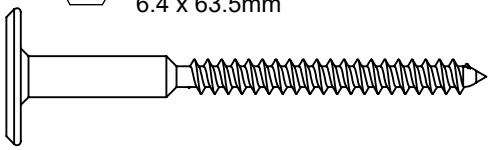

Hardware Identification (Actual Size)

54 x PB1 - 1/4 x 3/4"- 53453203
6.4 x 19.1mm

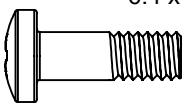

11 x PB6 - 1/4 x 1" - 53413210
6.4 x 25.4mm

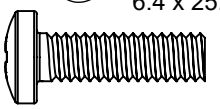

5 x PB2 - 1/4 x 1-1/4" - 53433212
6.4 x 31.8mm

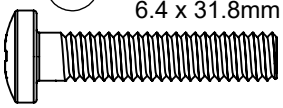

2 x G1 - 5/16 x 1-1/2" - 53703312
7.9 x 38.1mm

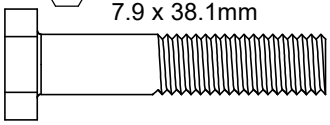

30 x WB8 - 5/16 x 2-3/8" - 53613326
7.9 x 60.3mm

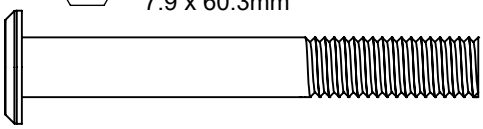

3 x WB7 - 5/16 x 3" - (53613330)
7.9 x 76.2mm

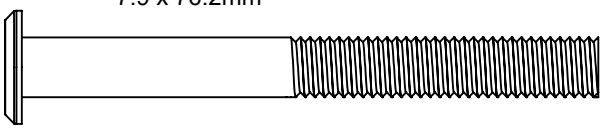

1 x D4 - #2 x 2 - 9200014

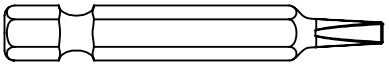

1 x H8 - 1/4 x 4-1/4" - 53703241
6.4 x 108mm

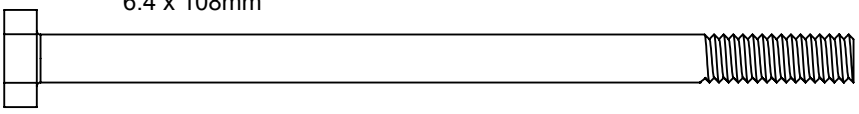

1 x D6 - 3/16" - 9200019
4.8mm

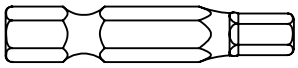

7 x G8 - 5/16 x 1" - 53703320
7.9 x 50.8mm

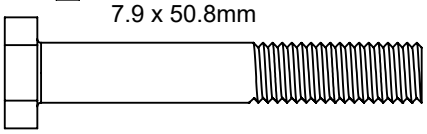

4 x G27 - 5/16 x 1-3/4" - 53703313
7.9 x 44.5mm

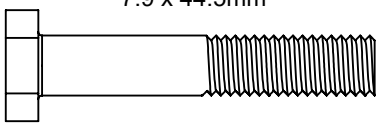

6 x G10 - 5/16 x 3" - 53703330
7.9 x 76.2mm

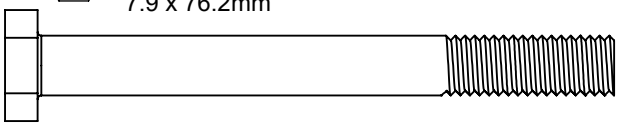

1 x G11 - 5/16 x 3-1/2" - 53703332
7.9 x 88.9mm

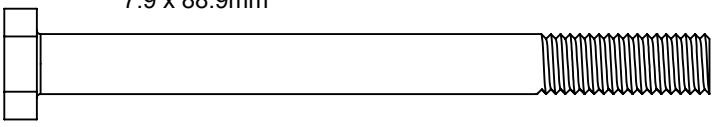

7 x G21 - 5/16 x 3-3/4" - 53703333
7.9 x 95.2mm

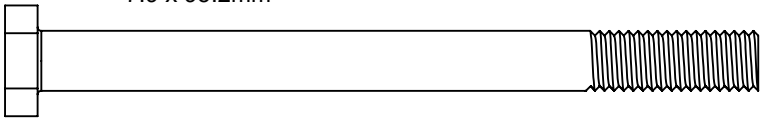

Hardware Identification (Actual Size)

3 x ⟨G4⟩ - 5/16 x 4" - 53703340
7.9 x 101.5mm

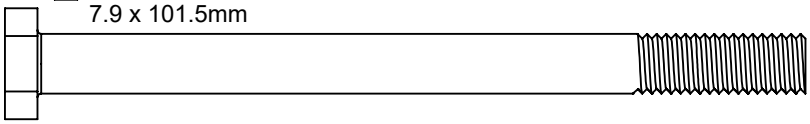

2 x ⟨G5⟩ - 5/16 x 4-1/2" - 53703342
7.9 x 114.3mm

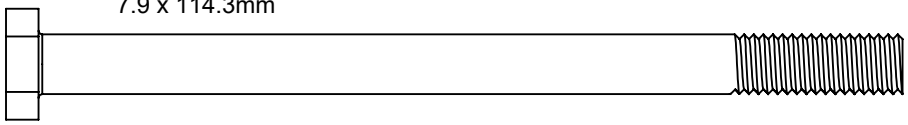

16 x ⟨G7⟩ - 5/16 x 5-1/2" - 53703352
7.9 x 139.7mm

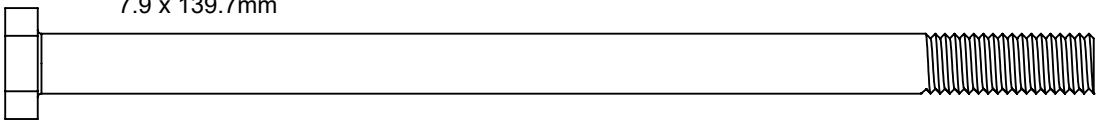

Part Identification (Reduced Part Size)

1x - 3320353



1x - 3320355



1x - 9320374



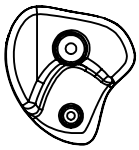

1x - 9320297RD
1x - 9320297LG

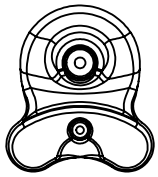

2x - 9320197BL
1x - 9320196

2x - 9209440



2x - 9320131

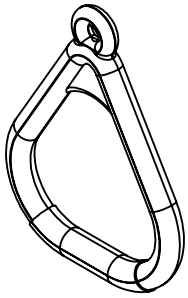

7x - 9290318

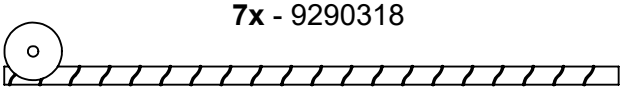

6x - 9206106

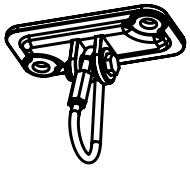

8x - 9200020

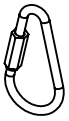

2x - 9320240

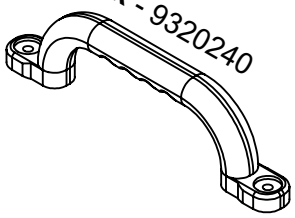

4x - 9502045



2x - 9502020



1x - 9200131

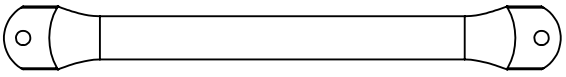

2x - 9200145

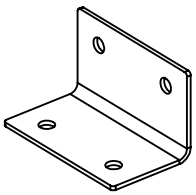

2x - 9320130

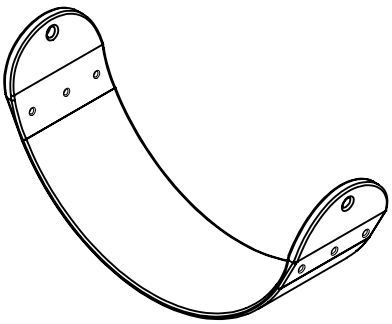

1x - 9200144

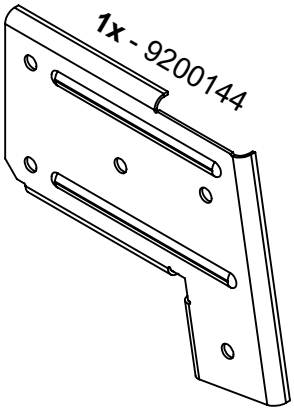

1x - 9200143

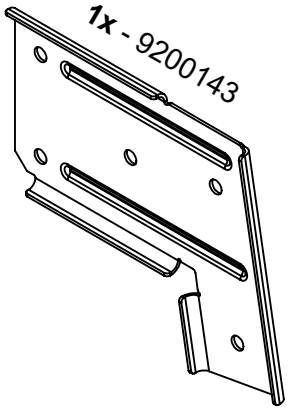

europecustomerservice@kidkraft.com
+31 20 305 8620
M-F from 09:00 to 17:30 (GMT+1)

parts.kidkraft.eu

Part Identification (Reduced Part Size)

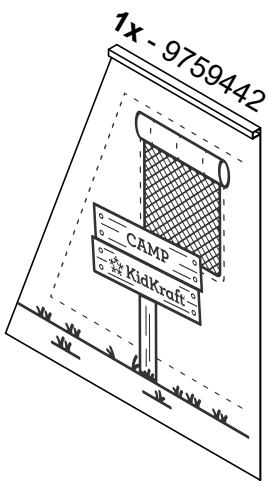

1x - 9759442

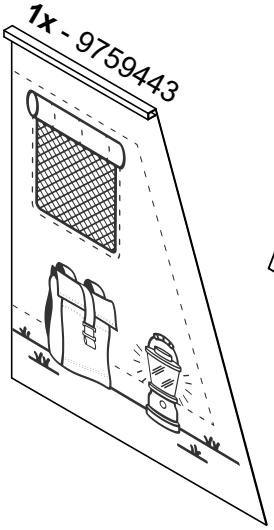

1x - 9759443

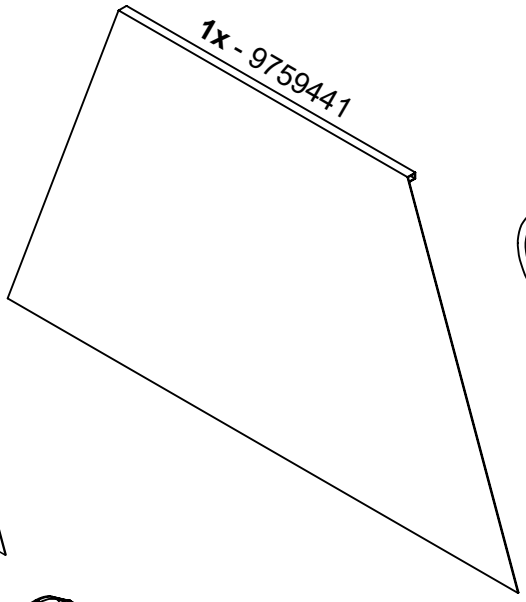

1x - 9759441

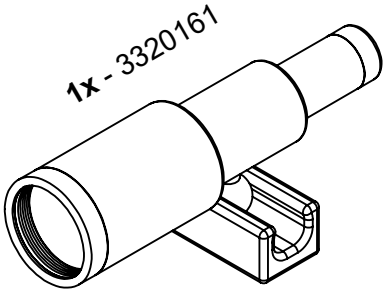

1x - 3320161

1x - (9759450)

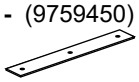

1x - 7310149-1

1x - (9200168)

10x - 9300130

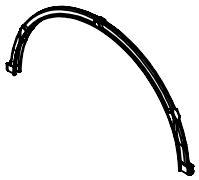

9x - 3310121

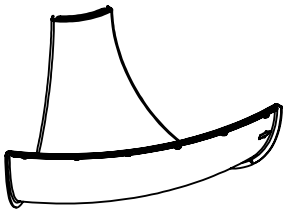

1x - 3310131

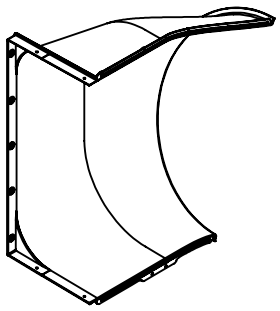

1x - 3310130

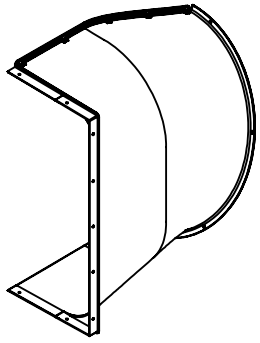

1x - 3310124

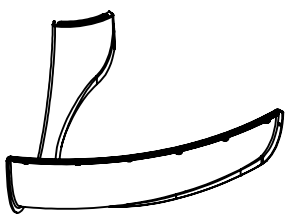

1x - 3310132

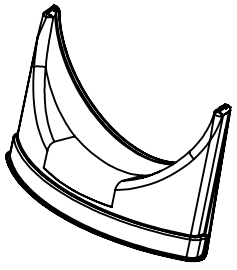

2x - (9200157)



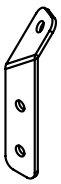

1x - (9200156)

31x - (54902200)





30x - (53453202)



1x - (53452209)

1 Inventory Parts - Read This Before Starting Assembly

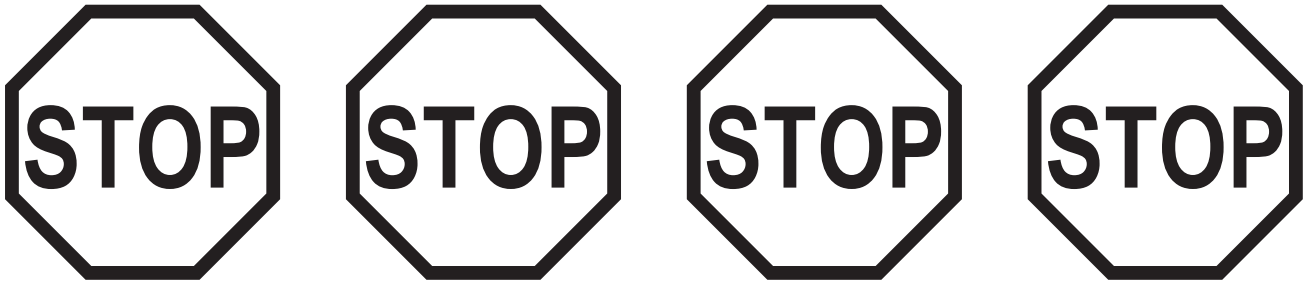

Inventory should be completed before starting installation. KidKraft will not cover costs of any additional installation trip due to missing or damaged pieces.

A. This is the time for you to inventory all your hardware, wood and accessories, referencing the parts identification sheets. This will assist you with your assembly.

• The wood pieces will have the key number stamped on the ends of the boards. Organize the wood pieces by step, as per the key numbering system below.

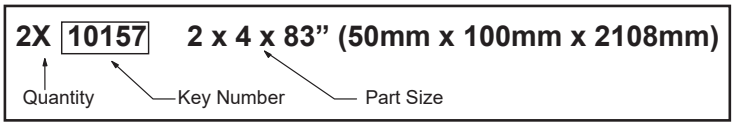

B. Read the assembly manual completely, paying special attention to EN71 and ASTM warnings; notes; and safety/maintenance information on pages 1 - 8.

If there are missing or damaged pieces, please contact the KidKraft Consumer Engagement team before going back to the retailer.

Order Replacement Parts 24/7

You can order replacement parts for this product 24 hours a day / 7 days a week:

Outdoor Swingsets and Playhouse Parts Ordering
https://parts.kidkraft.com/partsorderemail

If you have assembly or product questions, please refer to the front cover for direct contact information for our Consumer Engagement team OR you can also use this QR code with your smartphone for common questions and contact information.

KidKraft Help Center **https://kidkraft.zendesk.com/hc/en-us/**

2 Assemble T-Nuts first with hammer!

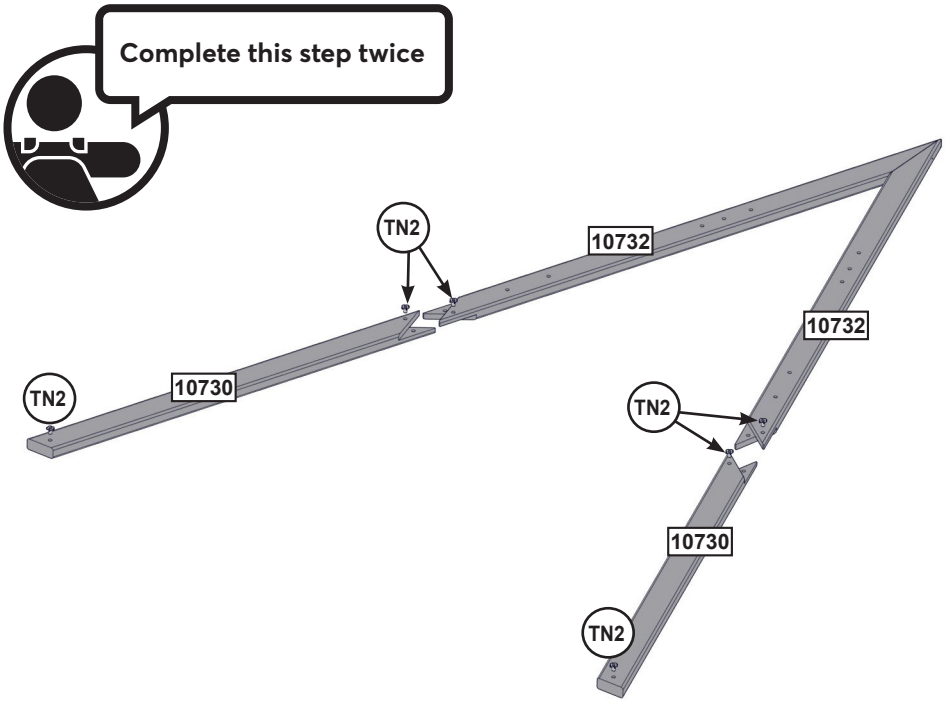

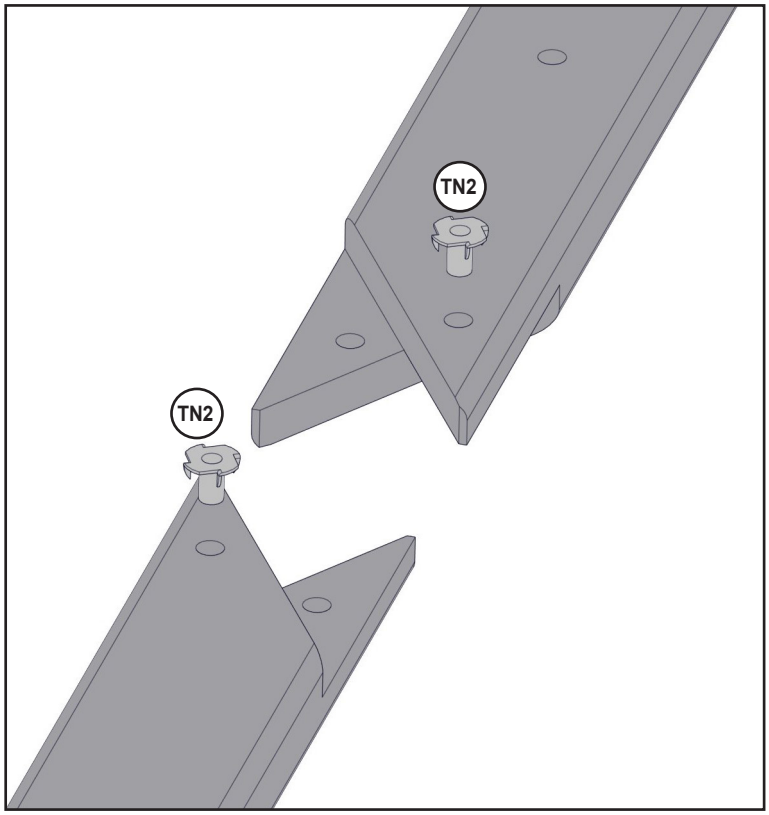

Wood Parts

4 x 10730 34.9 x 85.7 x 1326.6 mm (1 3/8" X 3 3/8" X 52 1/4")
4 x 10732 34.9 x 85.7 x 1756.2 mm (1 3/8" X 3 3/8" X 69 1/8")

Hardware

12 x TN2

3A

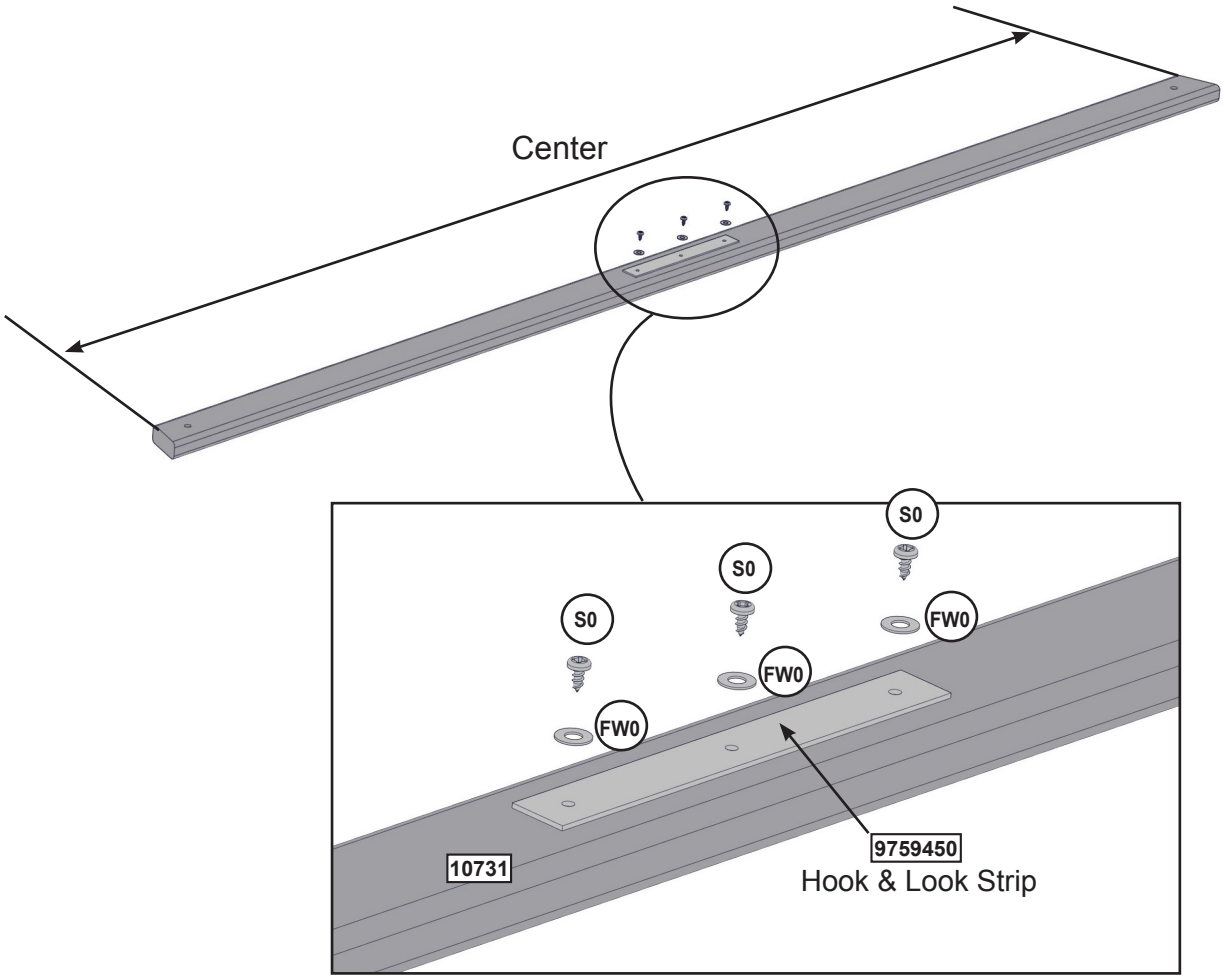

Wood Parts	Hardware	Other Parts
1 x 10731 25.4 x 63.5 x 2027 mm (1" X 2 1/2" X 79 13/16")	3 x S0 #8 x 22.2mm (#8 x 7/8") (FW0)	1 x 9759450

3B

Don't tighten bolts until step 7

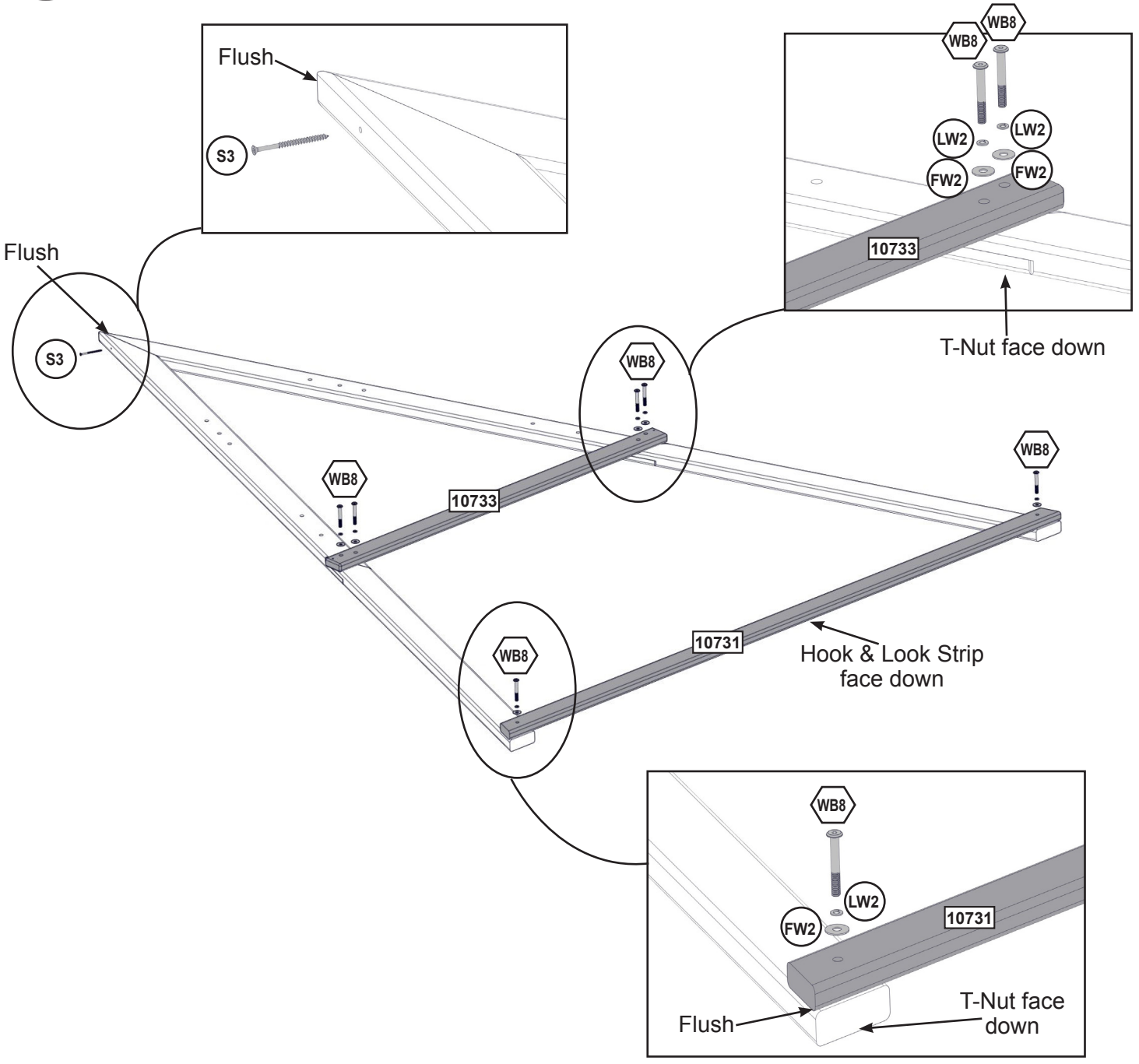

Wood Parts

1 x [10733] 25.4 x 63.5 x 1206.5 mm (1" X 2 1/2" X 47 1/2")

Hardware

1 x (S3) #8 x 63.5mm (#8 x 2-1/2")

6 x (WB8) 7.9mm x 60.3 mm (5/16 x 2-3/8")(FW2, LW2)

4

Don't tighten bolts until step 11

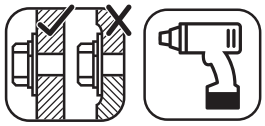

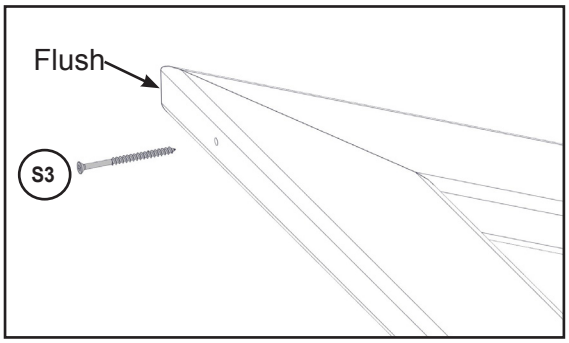

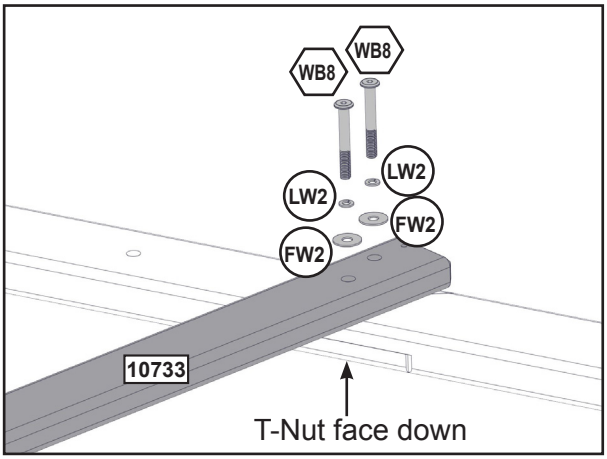

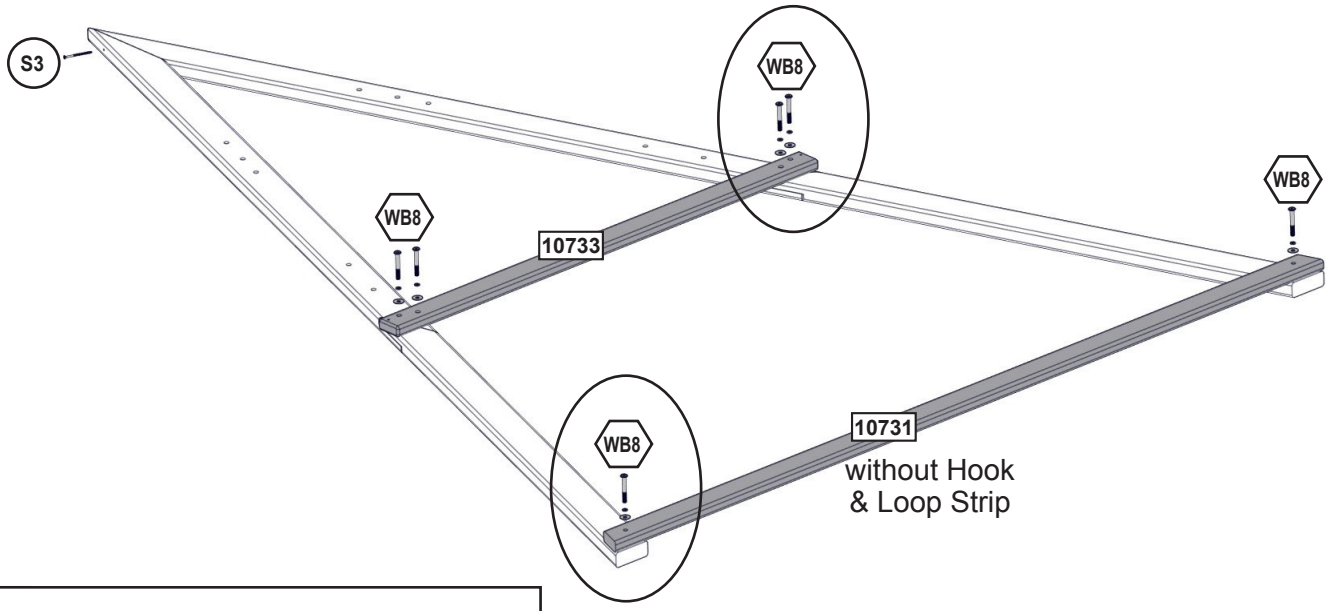

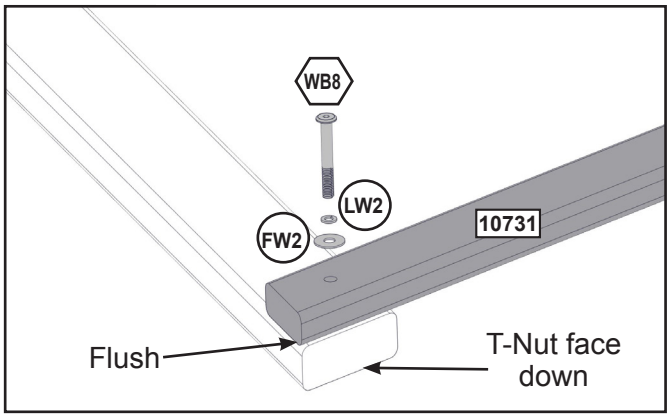

Wood Parts

1 x 10731 **25.4 x 63.5 x 2027 mm (1" X 2 1/2" X 79 13/16")**
1 x 10733 **25.4 x 63.5 x 1206.5 mm (1" X 2 1/2" X 47 1/2")**

Hardware

1 x S3 **#8 x 63.5mm (#8 x 2-1/2")**
6 x WB8 **7.9mm x 60.3 mm (5/16 x 2-3/8")(FW2, LW2)**

europecustomerservice@kidkraft.com
+31 20 305 8620
M-F from 09:00 to 17:30 (GMT+1)

parts.kidkraft.eu

5

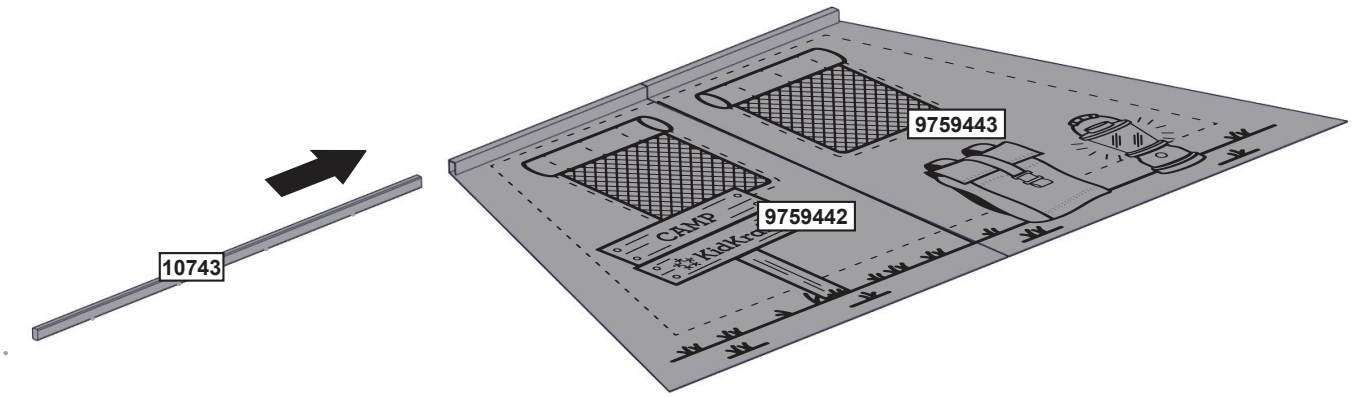

Wood Parts

1 x 10743 15.9 x 25.4 x 1080 mm (5/8" x 1" x 42 1/2")

Other Parts

1 x 9759442

1 x 9759443

6



Pre-drill holes using a 1/8 in drill bit.

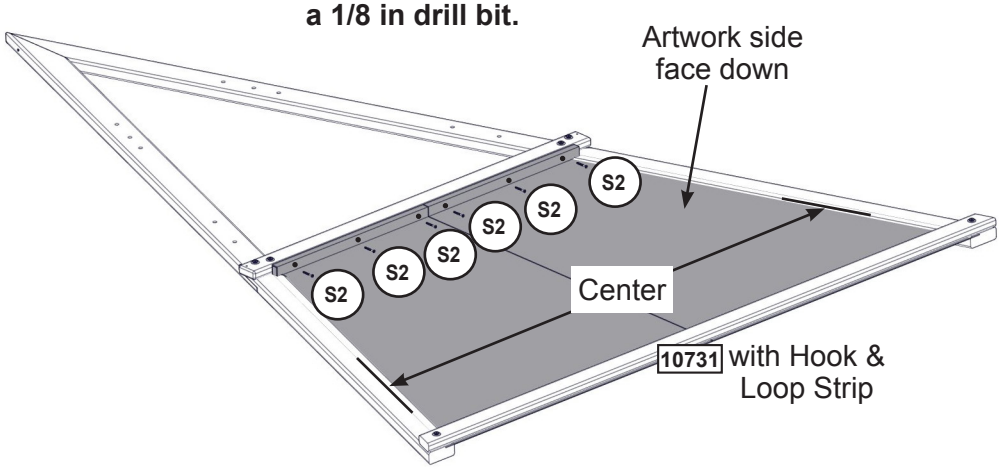

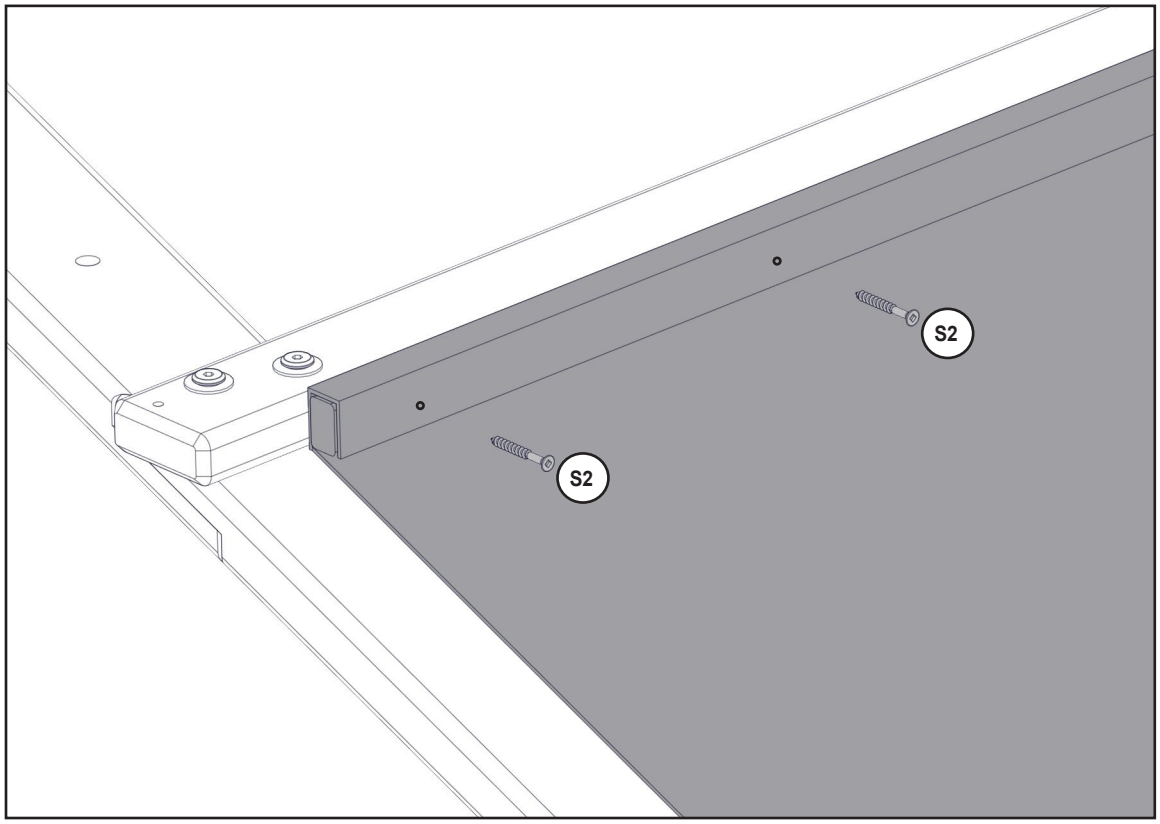

Hardware

6 x (S2) #8 x 38.1mm (#8 x 1-1/2")

7

Tighten all bolts.

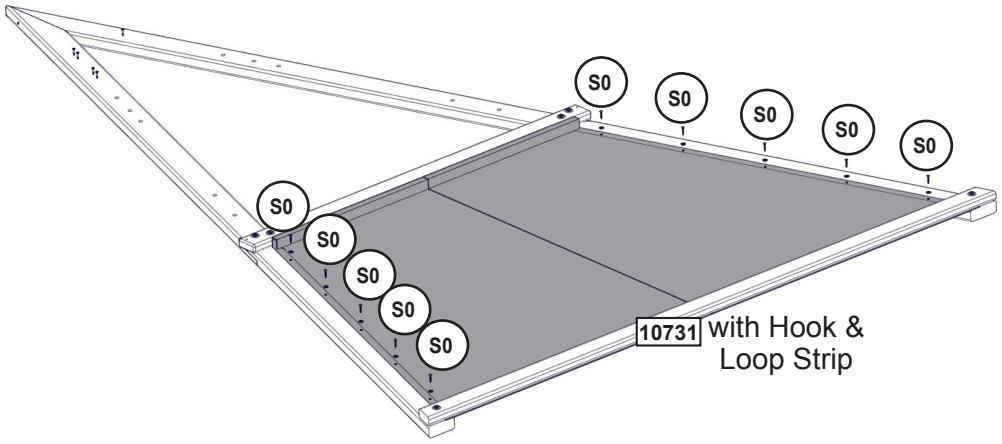

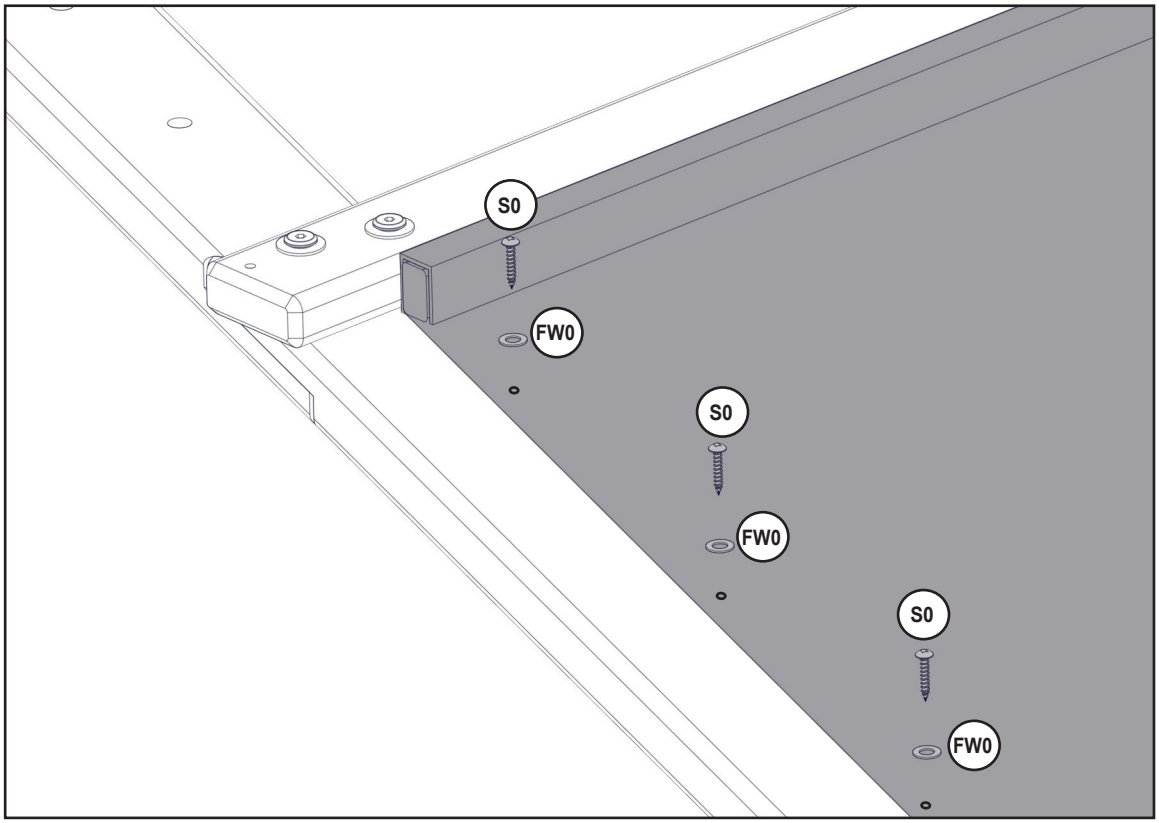

Hardware

10 x S0 #8 x 22.2mm (#8 x 7/8")

10 x FW0

8 **Note: Structure partly removed for clarity.**

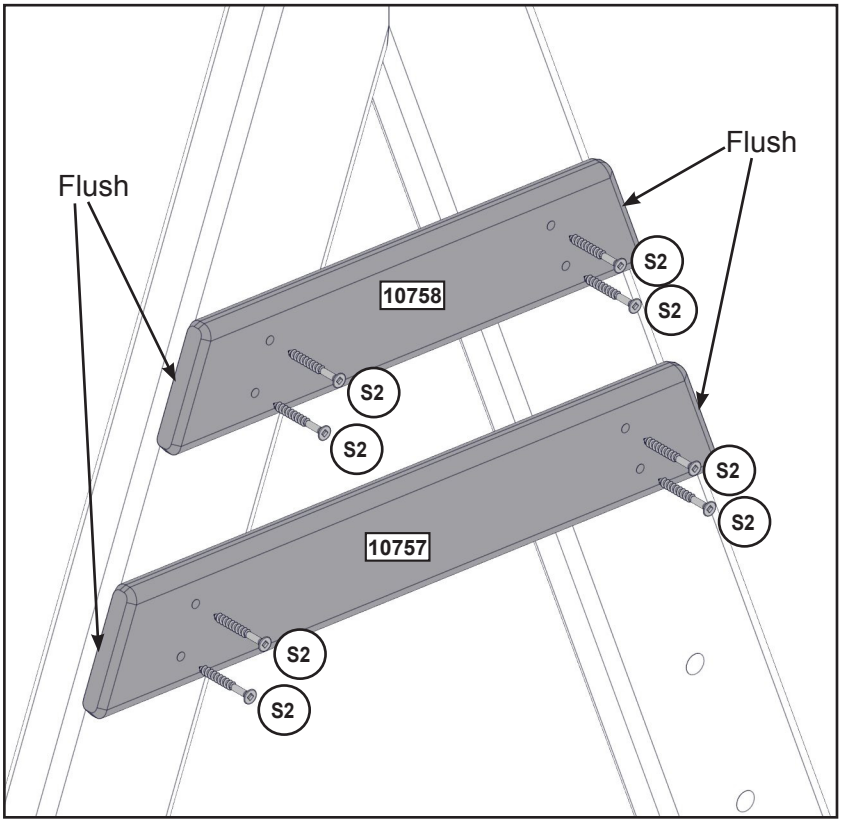

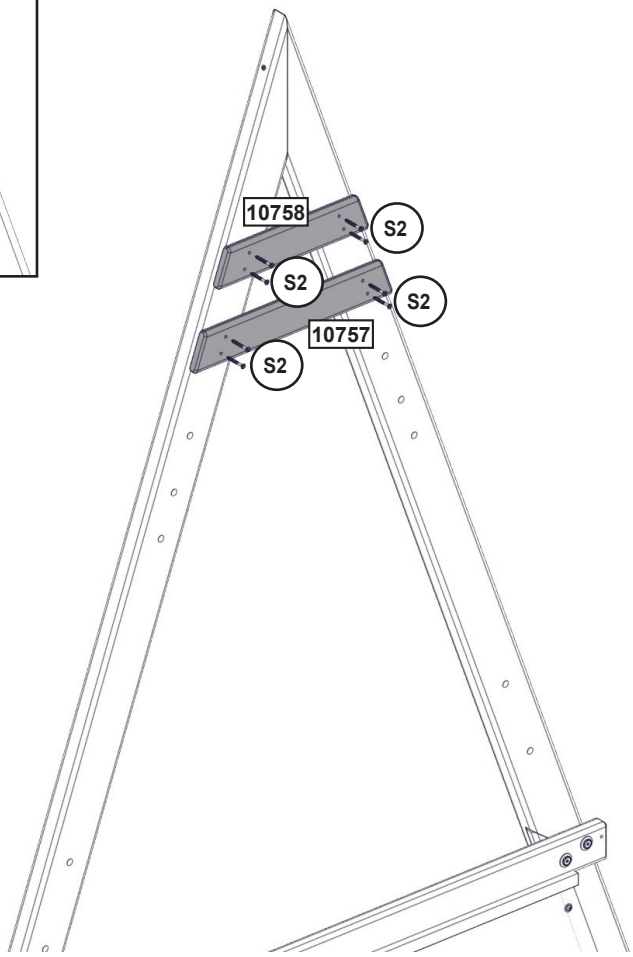

Wood Parts

1 x 10757 15.9 x 63.5 x 390.6 mm (5/8" X 2 1/2" X 15 3/8")
1 x 10758 15.9 x 63.5 x 298.2 mm (5/8" X 2 1/2" X 11 3/4")

Hardware

8 x S2 #8 x 38.1mm (#8 x 1-1/2")

europecustomerservice@kidkraft.com
+31 20 305 8620
M-F from 09:00 to 17:30 (GMT+1)

parts.kidkraft.eu

9

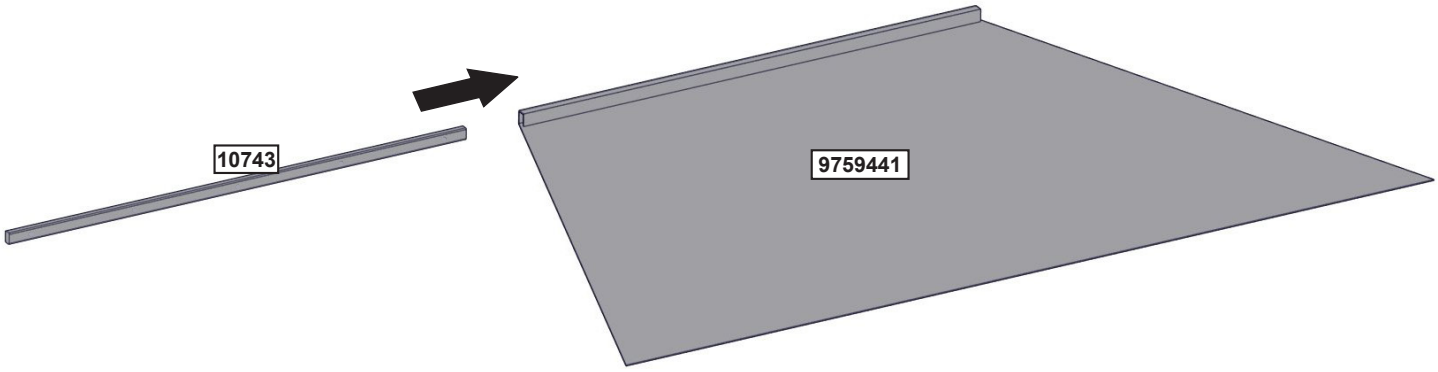

Wood Parts

1 x 10743 15.9 x 25.4 x 1080 mm (5/8" x 1" x 42 1/2")

Other Parts

1 x 9759441

10

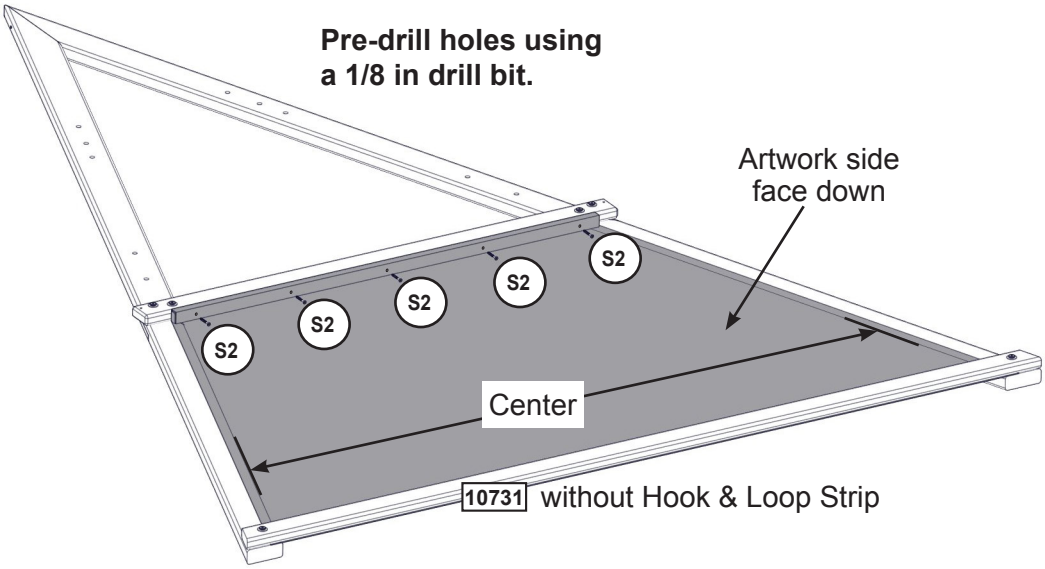

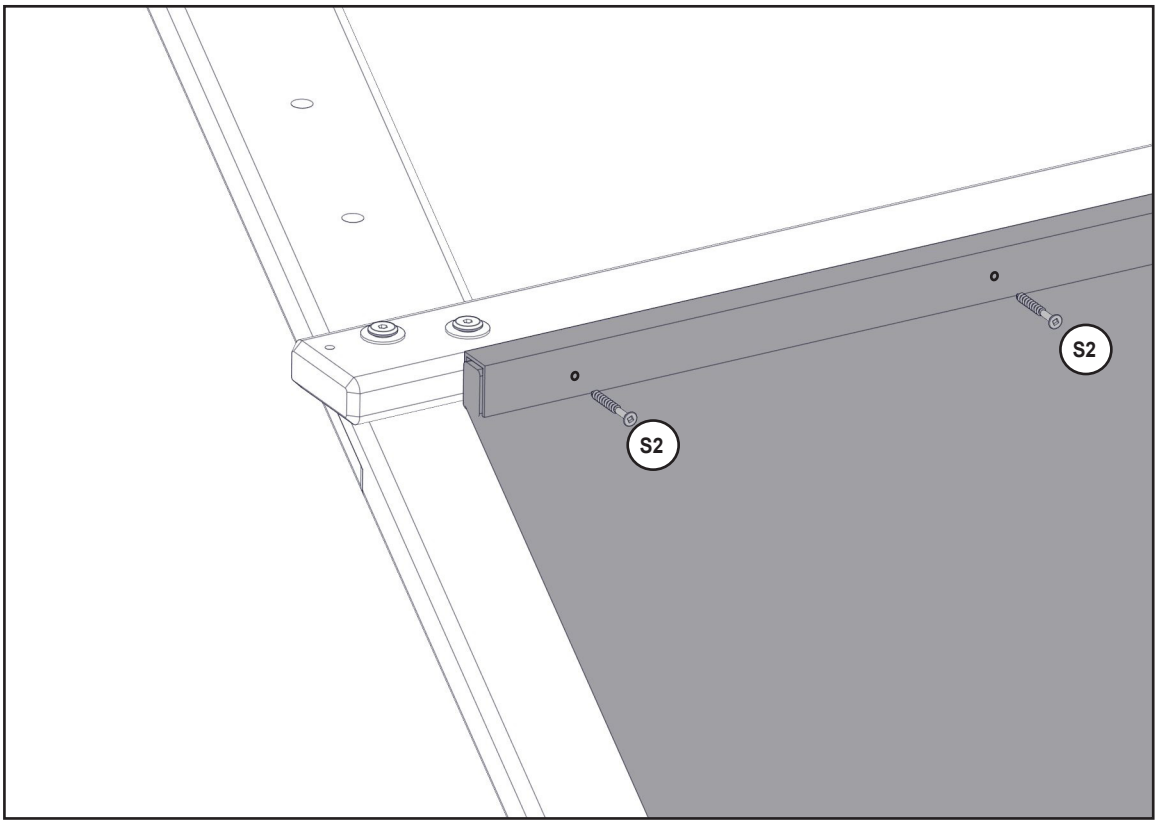

Hardware

5 x (S2) #8 x 38.1mm (#8 x 1-1/2")

europecustomerservice@kidkraft.com
+31 20 305 8620
M-F from 09:00 to 17:30 (GMT+1)

parts.kidkraft.eu

11

Tighten all bolts.

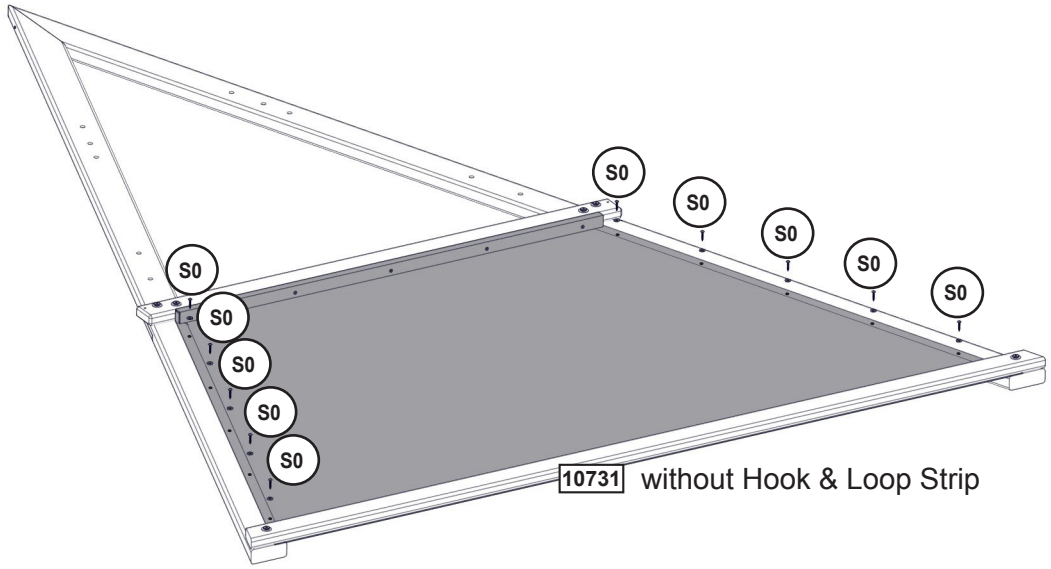

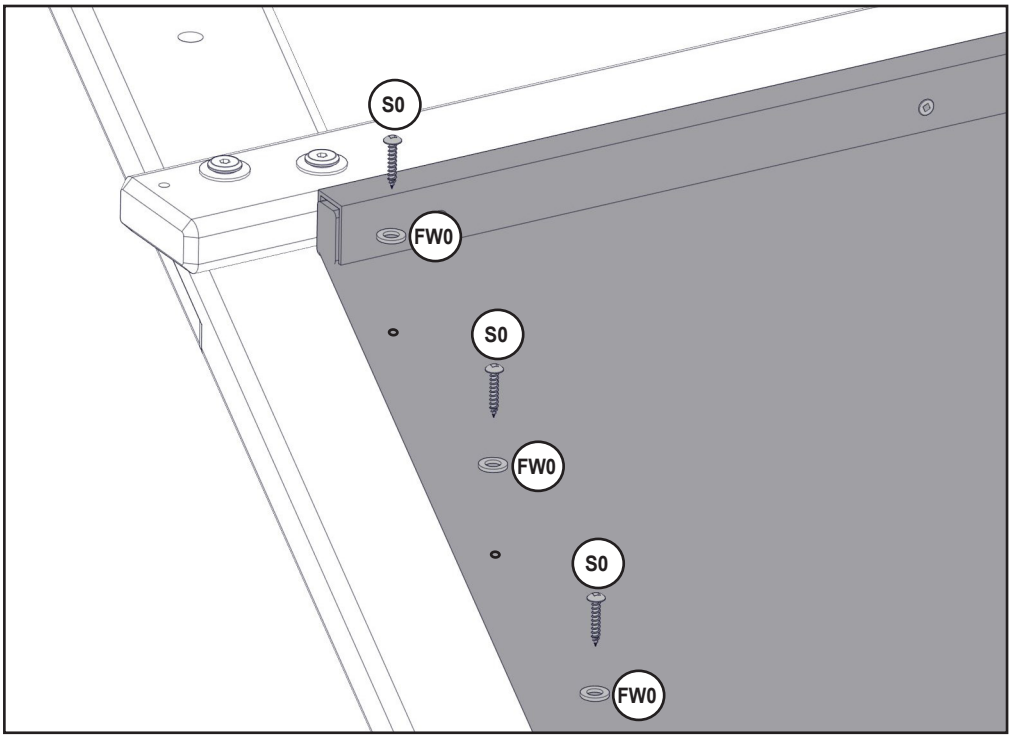

Hardware

10 x (S0) #8 x 22.2mm (#8 x 7/8")

10 x (FW0)

12

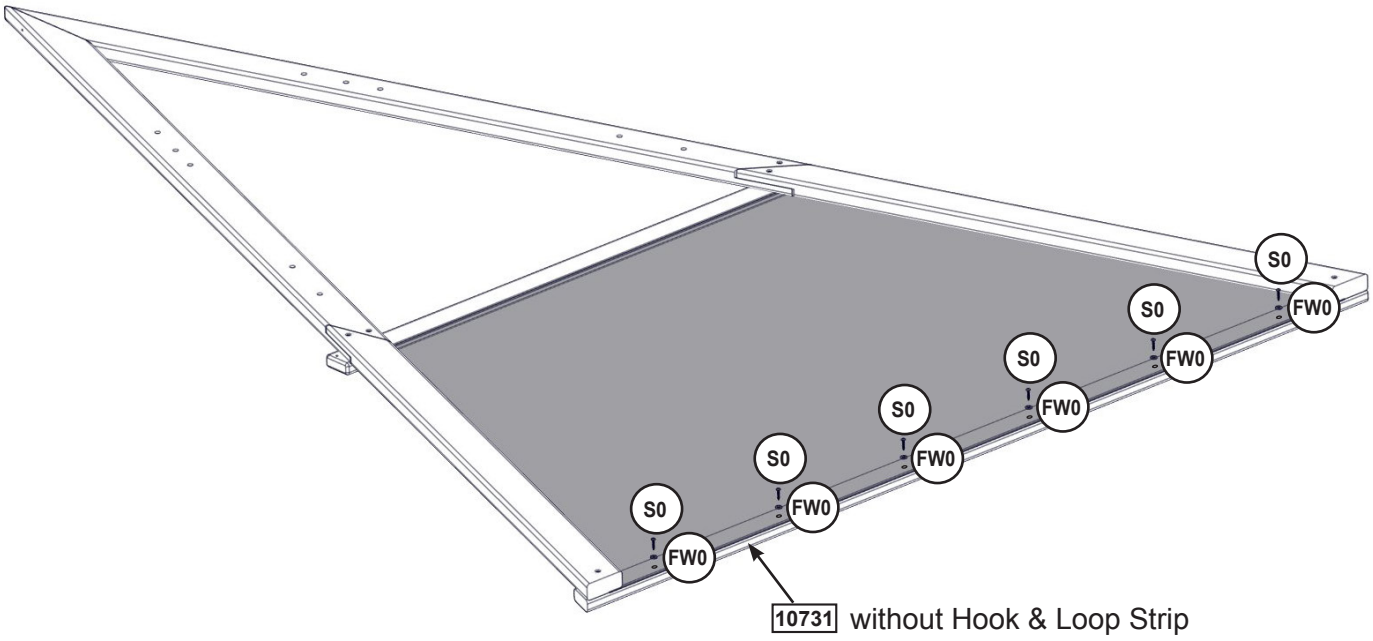

Hardware

6 x S0 **#8 x 22.2mm (#8 x 7/8")**

6 x FW0

13 **Note: Structure partly removed for clarity.**

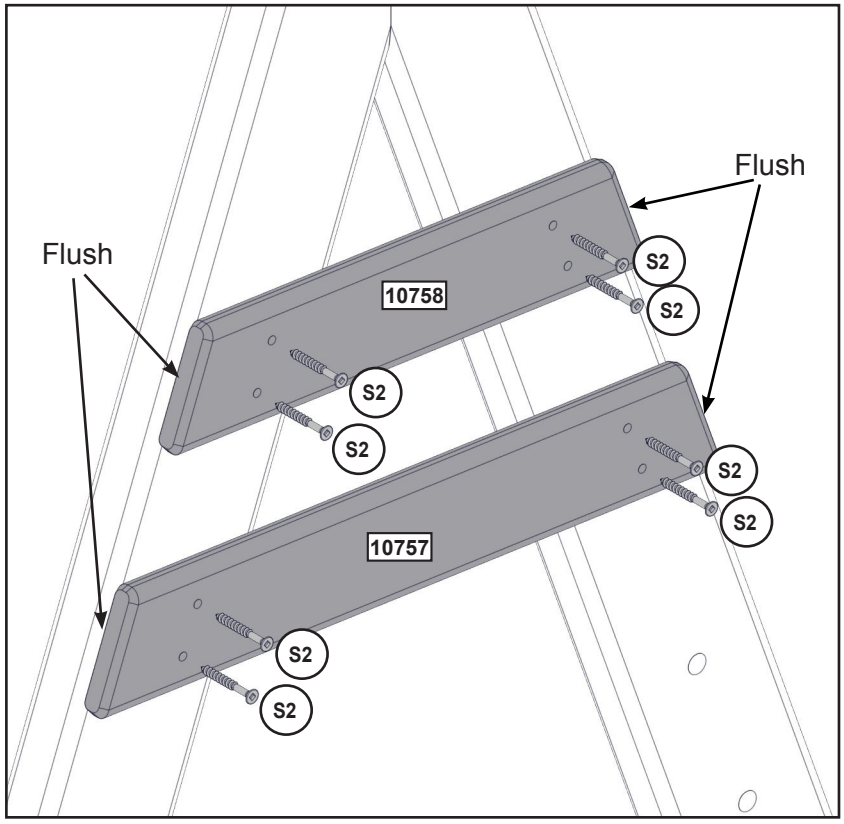

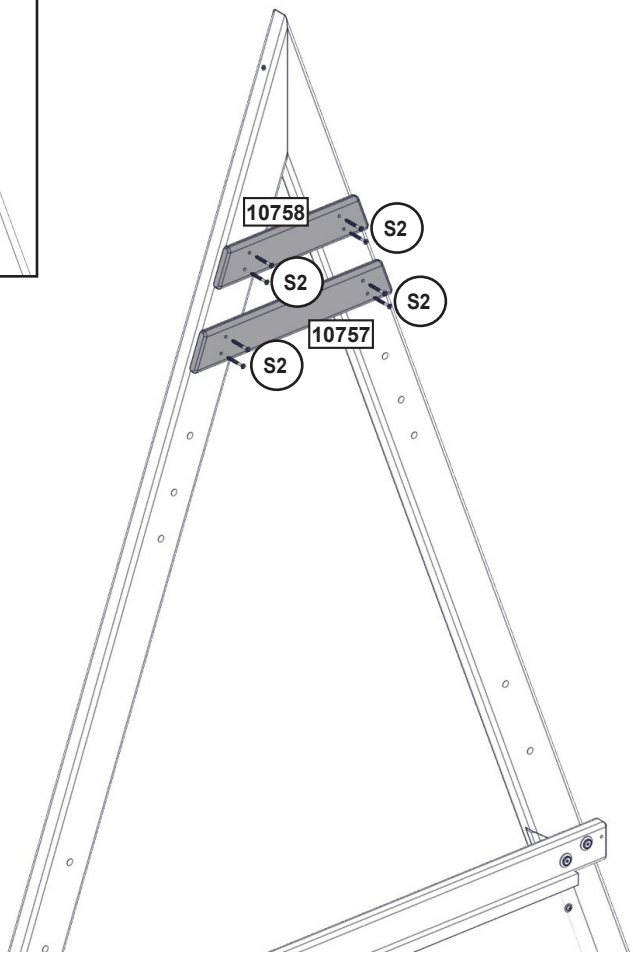

Wood Parts

1 x 10757 15.9 x 63.5 x 390.6 mm (5/8" X 2 1/2" X 15 3/8")
1 x 10758 15.9 x 63.5 x 298.2 mm (5/8" X 2 1/2" X 11 3/4")

Hardware

8 x S2 #8 x 38.1mm (#8 x 1-1/2")

14

Pre-drill holes using a 1/8 in drill bit.

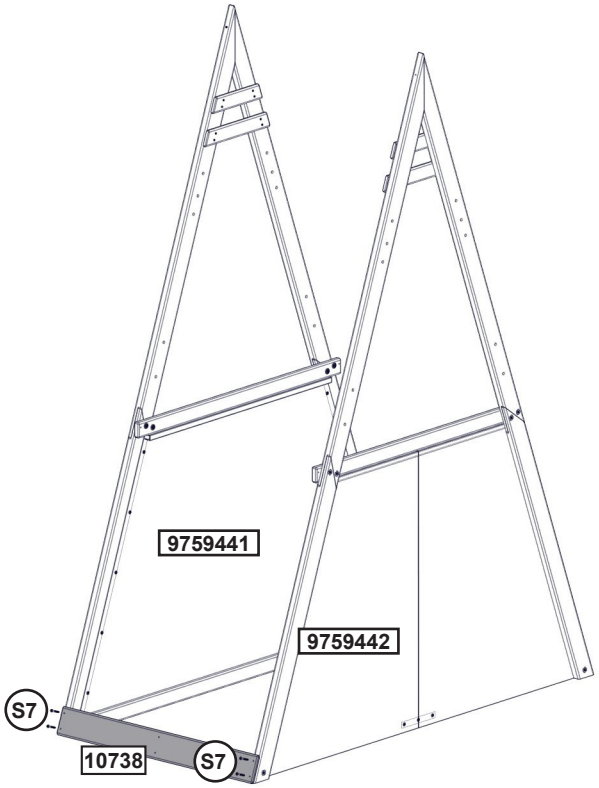

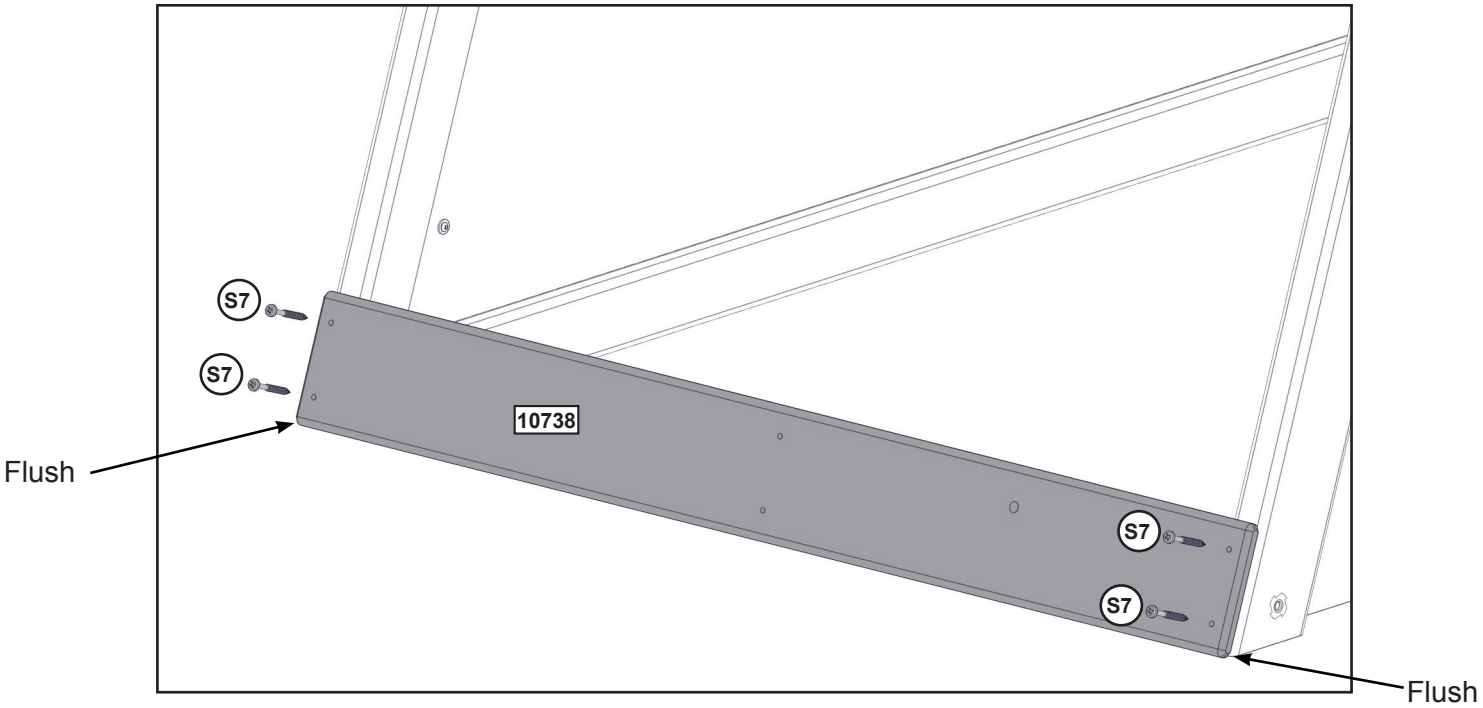

Wood Parts

1 x 10738 15.9 x 114.3 x 1035 mm (5/8" X 4 1/2" X 40 3/4")

Hardware

4 x S7 #12 x 50.8mm (#12 x 2 in)

europecustomerservice@kidkraft.com
+31 20 305 8620
M-F from 09:00 to 17:30 (GMT+1)

parts.kidkraft.eu

15

Assemble T-Nuts first with hammer!

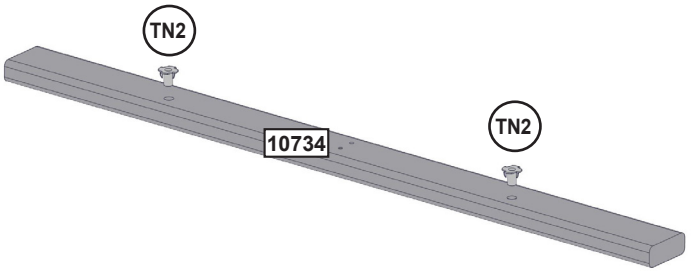

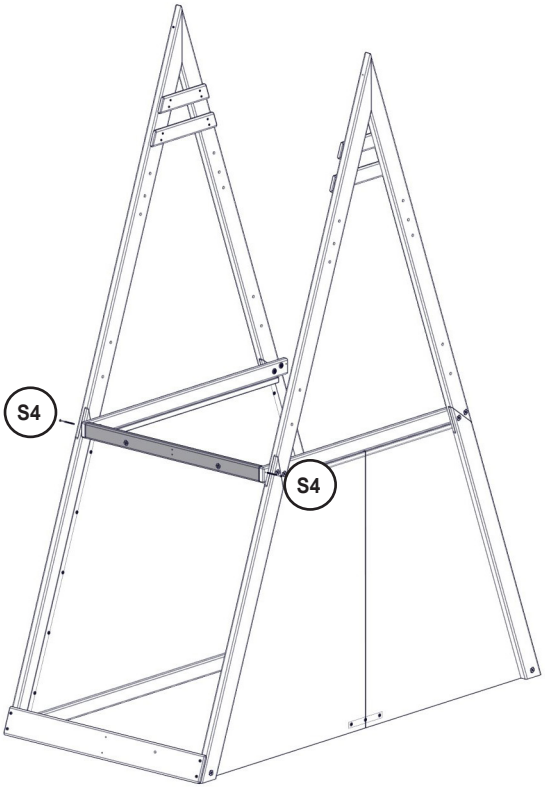

Pre-drill holes using a 1/8” drill.

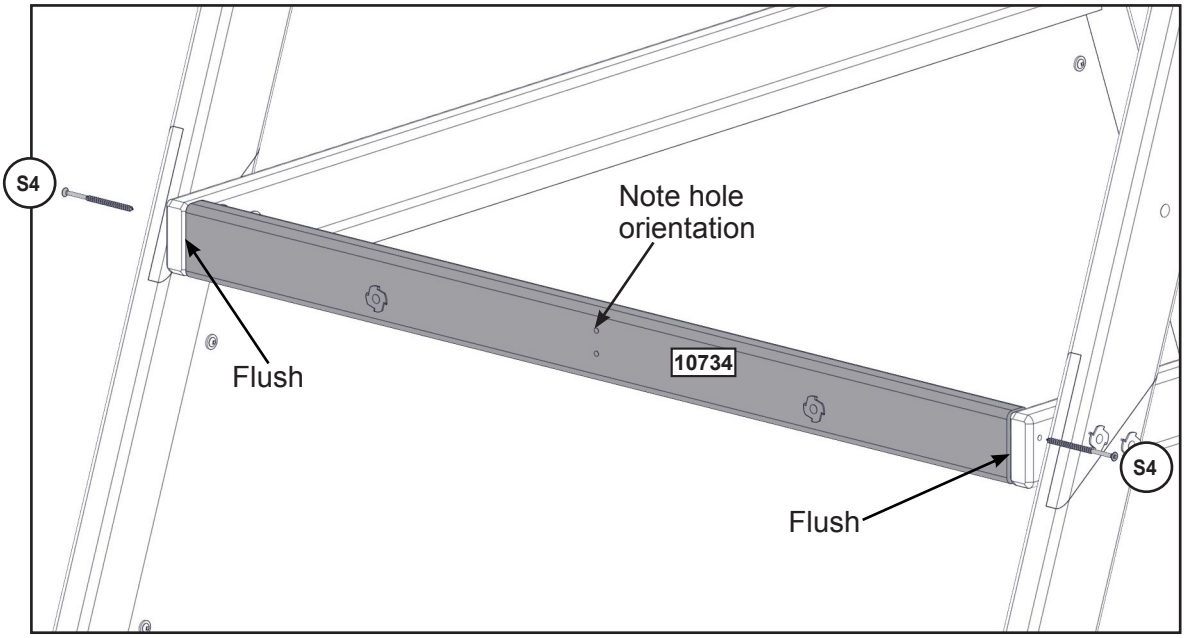

Wood Parts

1 x 10734 25.4 x 63.5 x 914.4 mm (1” X 2 1/2” X 36”)

Hardware

2 x S4 #8 x 76.2mm (#8 x 3”)

2 x TN2

16

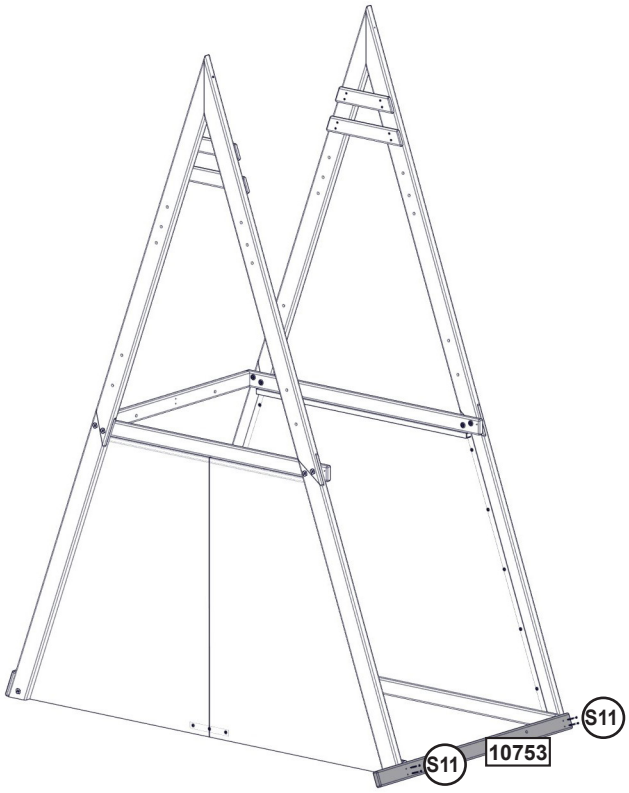

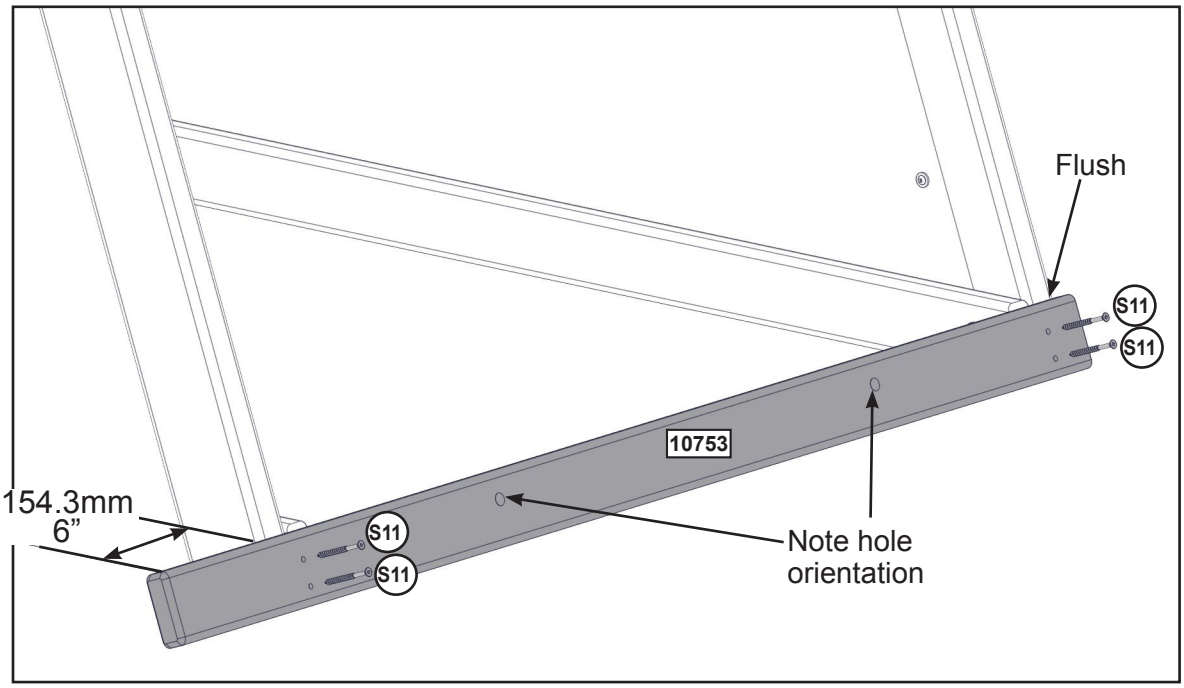

Wood Parts

1 x 10753 25.4 x 63.5 x 1189.8 mm (1” X 2 1/2” X 46 13/16”)

Hardware

4 x S11 #8 x 50.8mm (#8 x 2”)

europecustomerservice@kidkraft.com
+31 20 305 8620
M-F from 09:00 to 17:30 (GMT+1)

parts.kidkraft.eu

17

Assemble T-Nuts first with hammer!

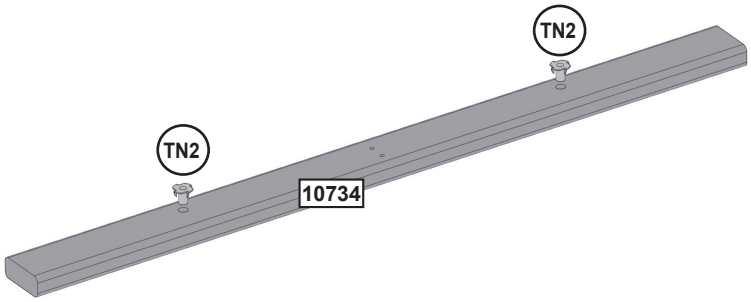

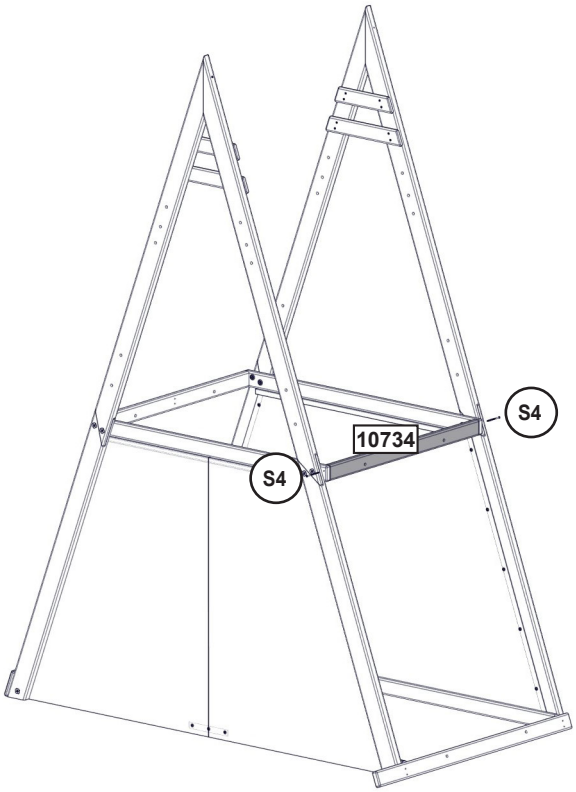

T-Nut's face inside of the fort

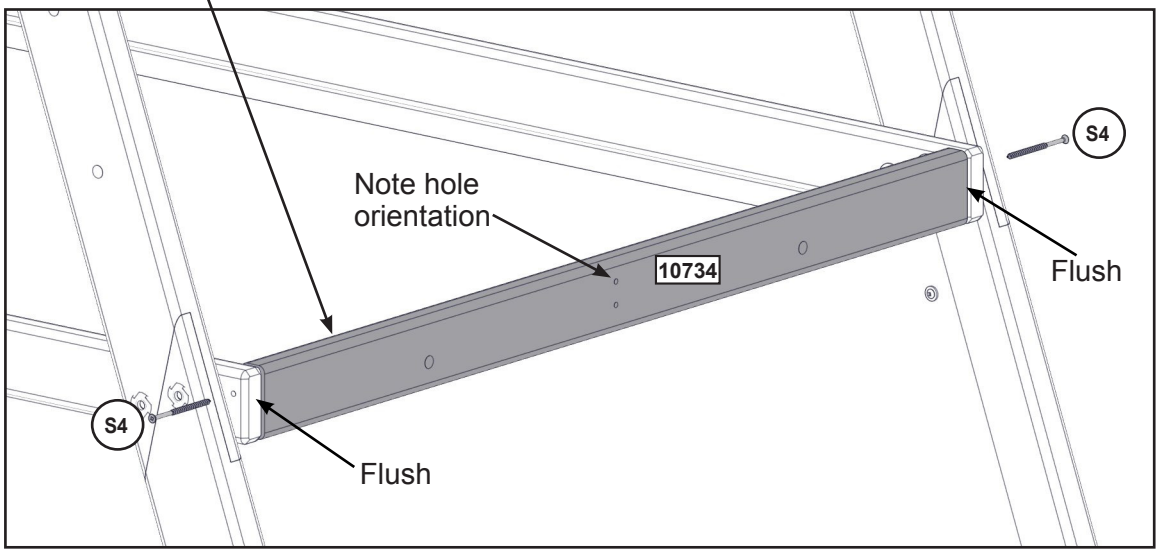

Wood Parts

1 x 10734 25.4 x 63.5 x 914.4 mm (1" X 2 1/2" X 36")

Hardware

2 x S4 #8 x 76.2mm (#8 x 3")

2 x TN2

18

Assemble T-Nuts first with hammer!

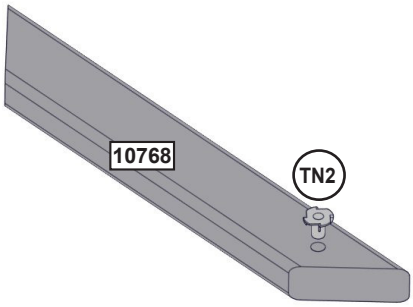

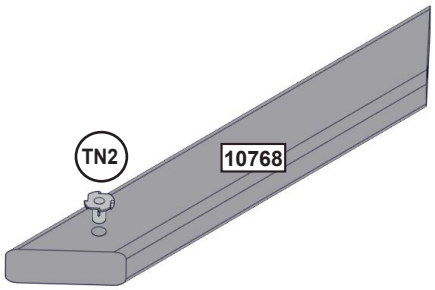

Wood Parts

2 x 10768 31.8 x 63.5 x 433 mm (1 1/4" X 2 1/2" X 17 1/16")

Hardware

2 x TN2

europecustomerservice@kidkraft.com
+31 20 305 8620
M-F from 09:00 to 17:30 (GMT+1)

parts.kidkraft.eu

19

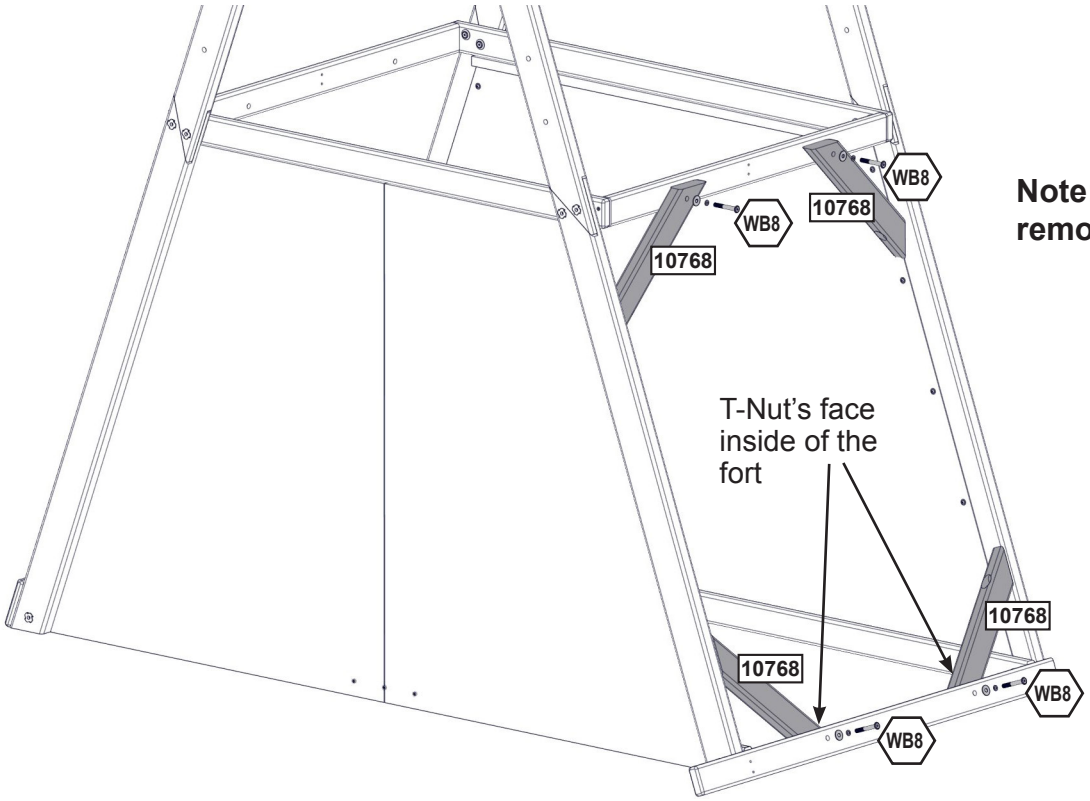

Note: Structure partly removed for clarity.

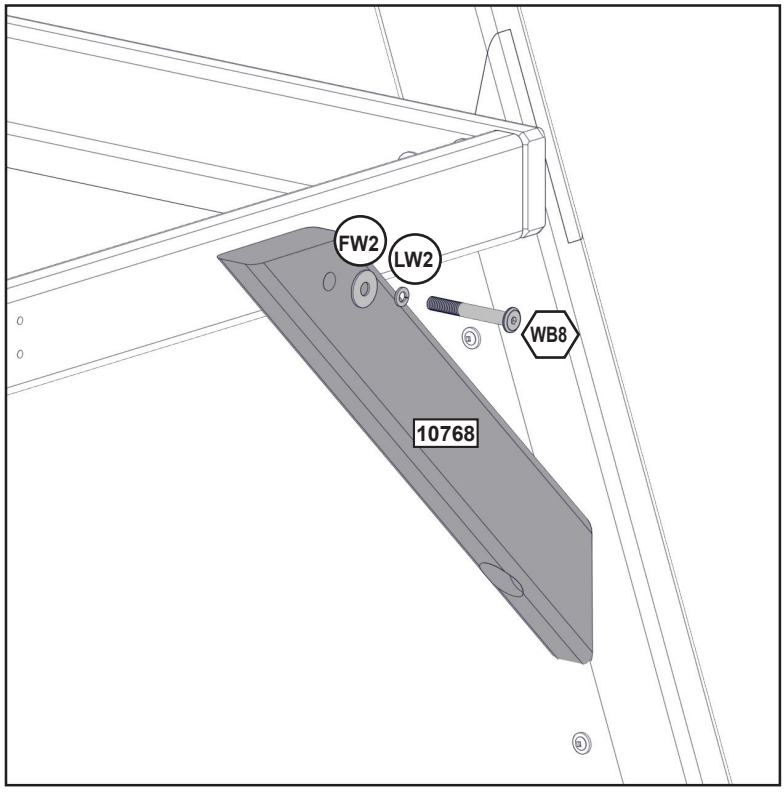

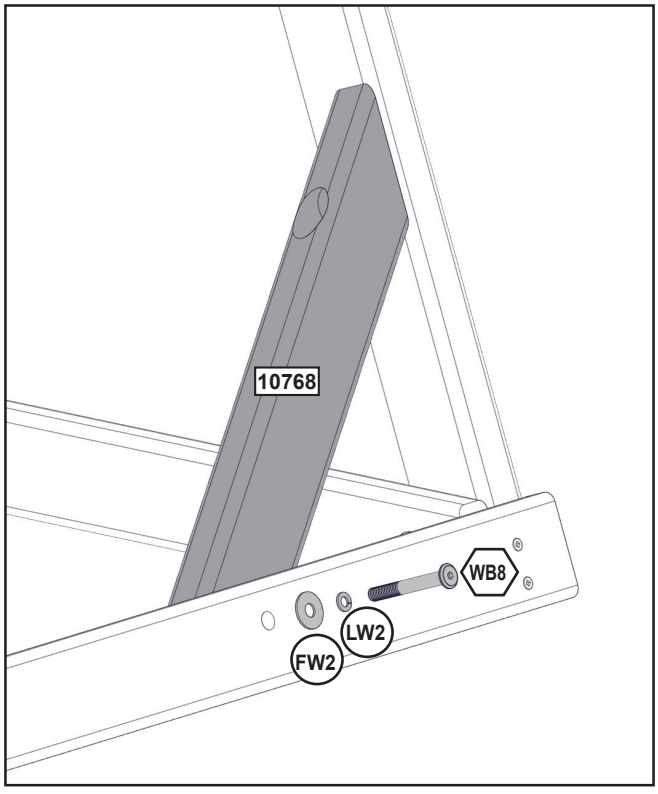

Wood Parts

2 x 10768 31.8 x 63.5 x 433 mm (1 1/4" X 2 1/2" X 17 1/16")

Hardware

4 x WB8 7.9mm x 60.3 mm (5/16 x 2-3/8")(FW2, LW2)

20

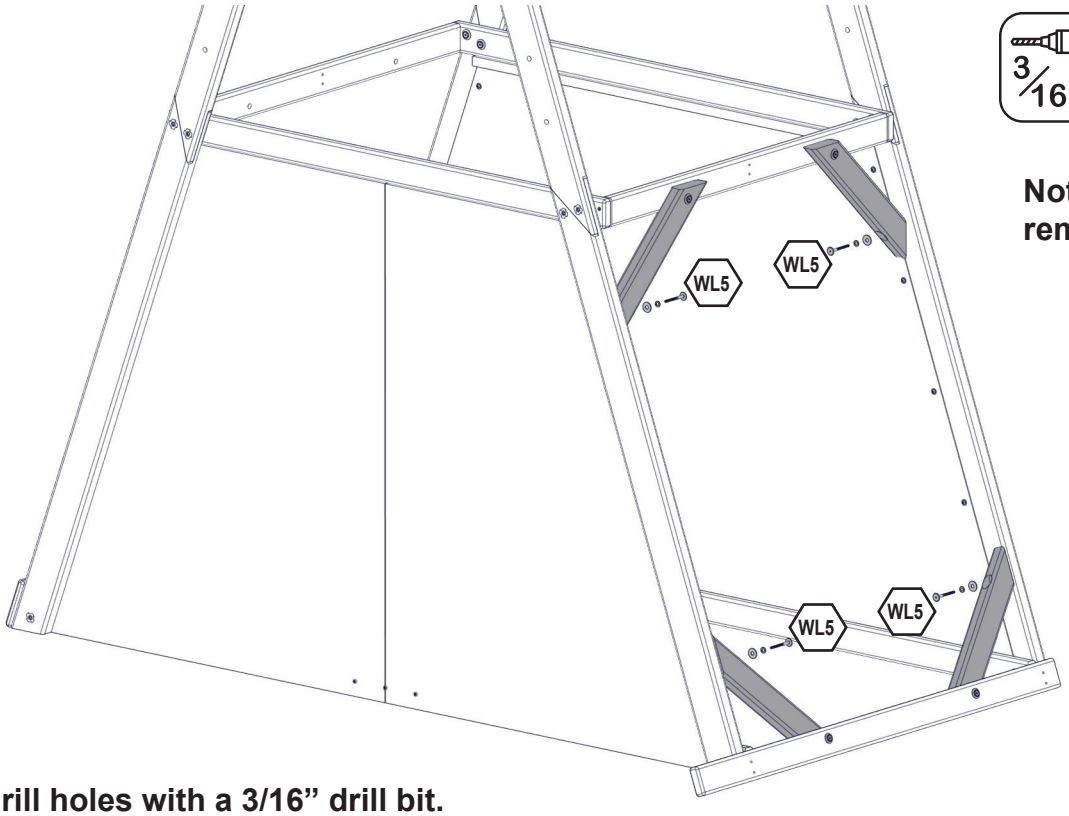



Note: Structure partly removed for clarity.

Pre-drill holes with a 3/16” drill bit.

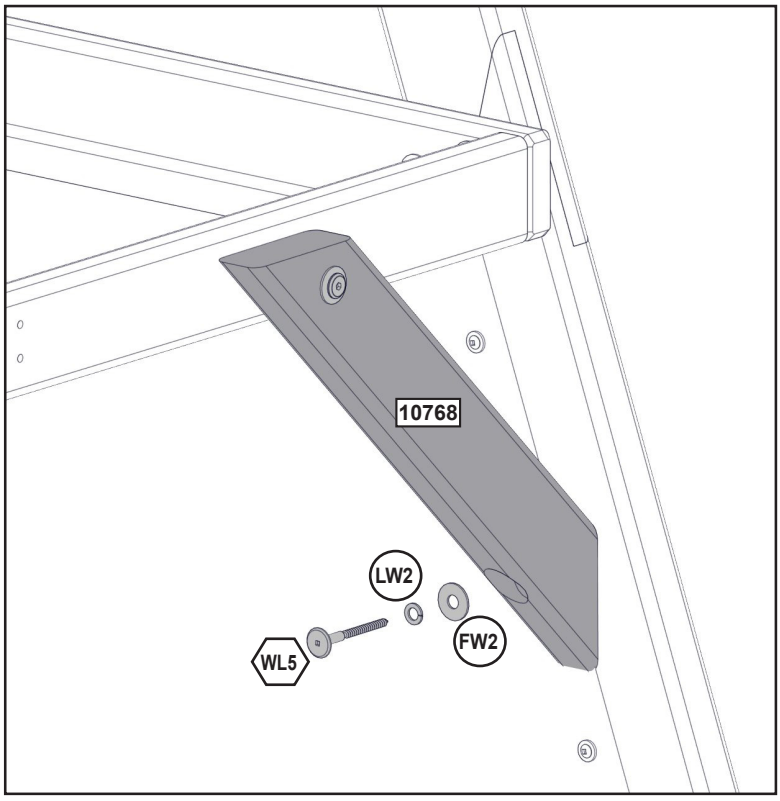

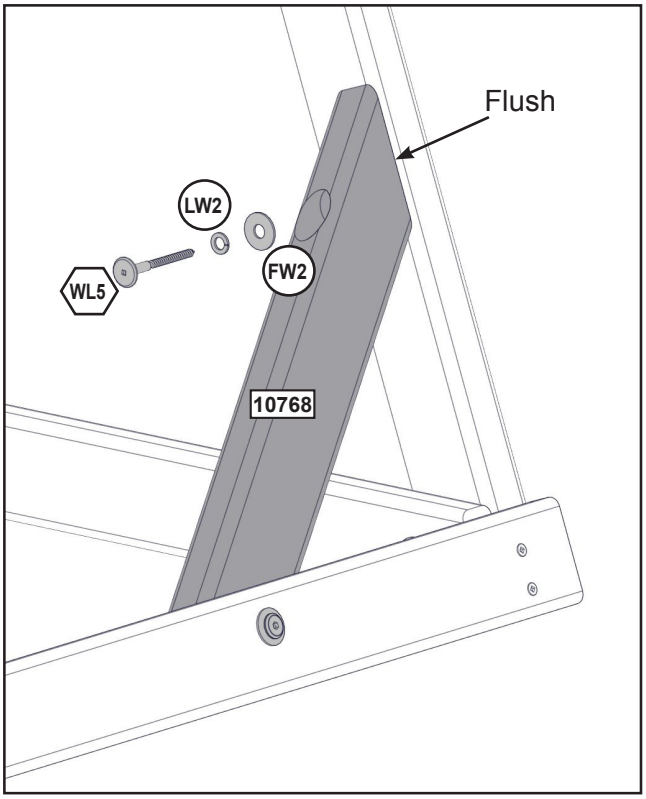

Hardware

4 x WL5 **6.4mm x 63.5 mm (1/4 x 2-1/2 in)(FW2, LW2)**

europecustomerservice@kidkraft.com
+31 20 305 8620
M-F from 09:00 to 17:30 (GMT+1)

parts.kidkraft.eu

21

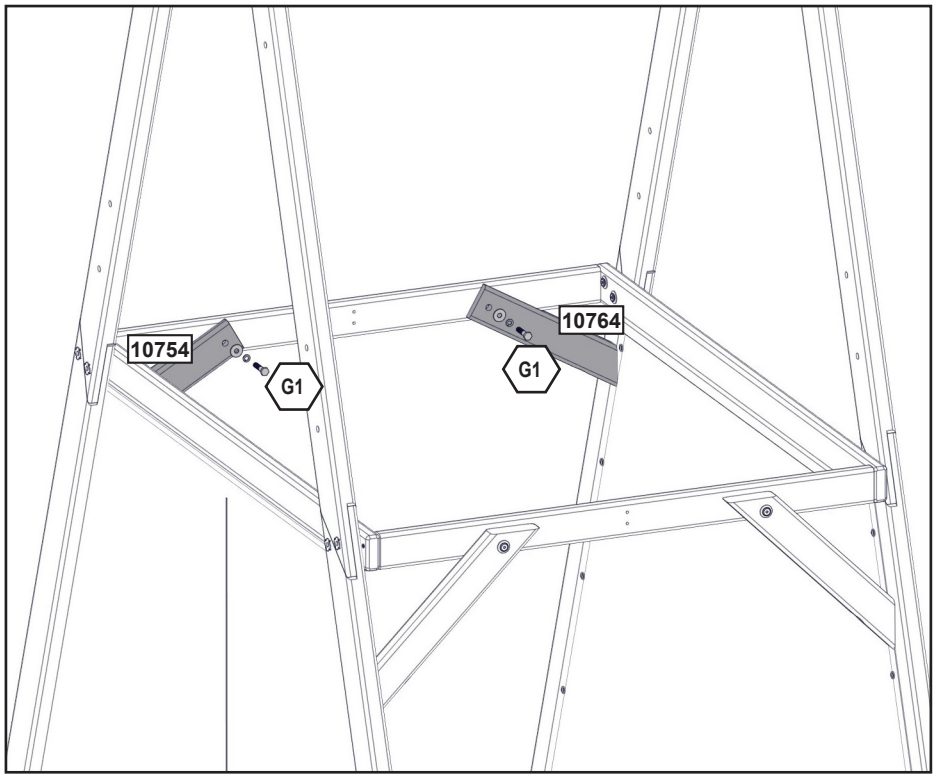

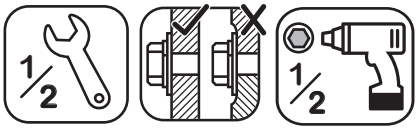

Note: Structure partly removed for clarity.

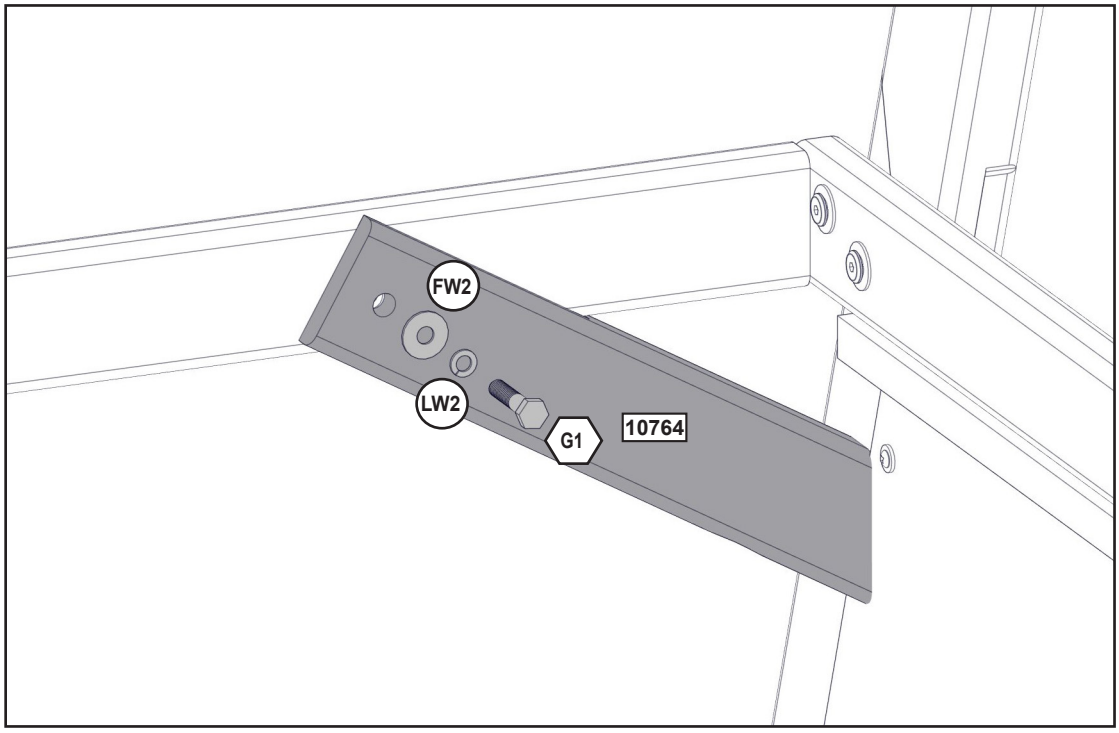

Wood Parts

1 x 10754 31.8 x 63.5 x 317.2 mm (1 1/4" X 2 1/2" X 12 1/2")
1 x 10764 31.8 x 63.5 x 317.2 mm (1 1/4" X 2 1/2" X 12 1/2")

Hardware

2 x G1 7.9mm x 38.1mm (5/16 x 1-1/2")(LW2,FW2)

22

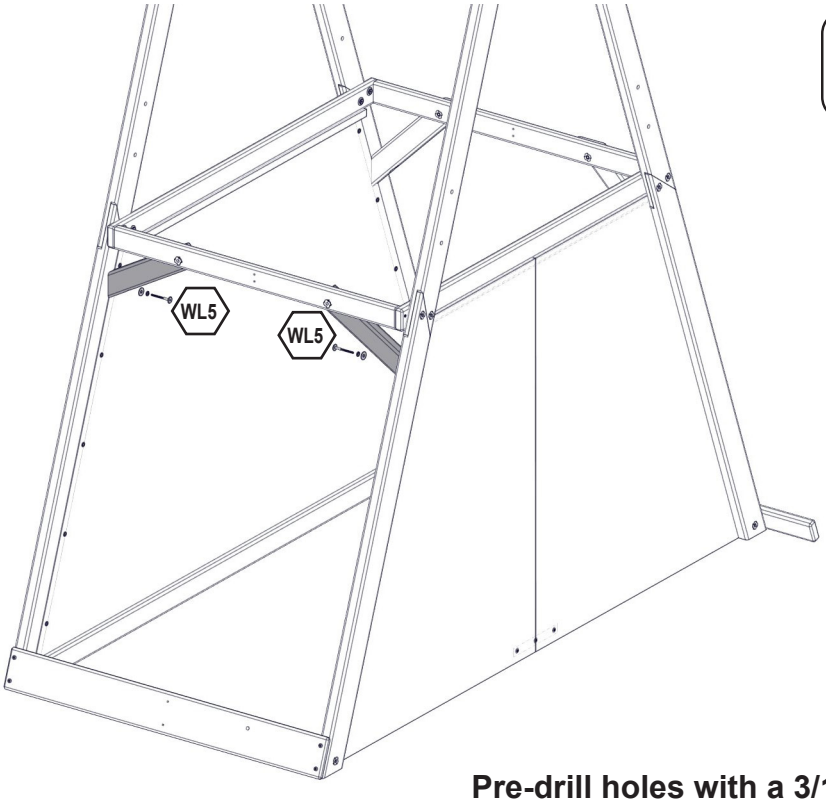



Note: Structure partly removed for clarity.

Pre-drill holes with a 3/16” drill bit.

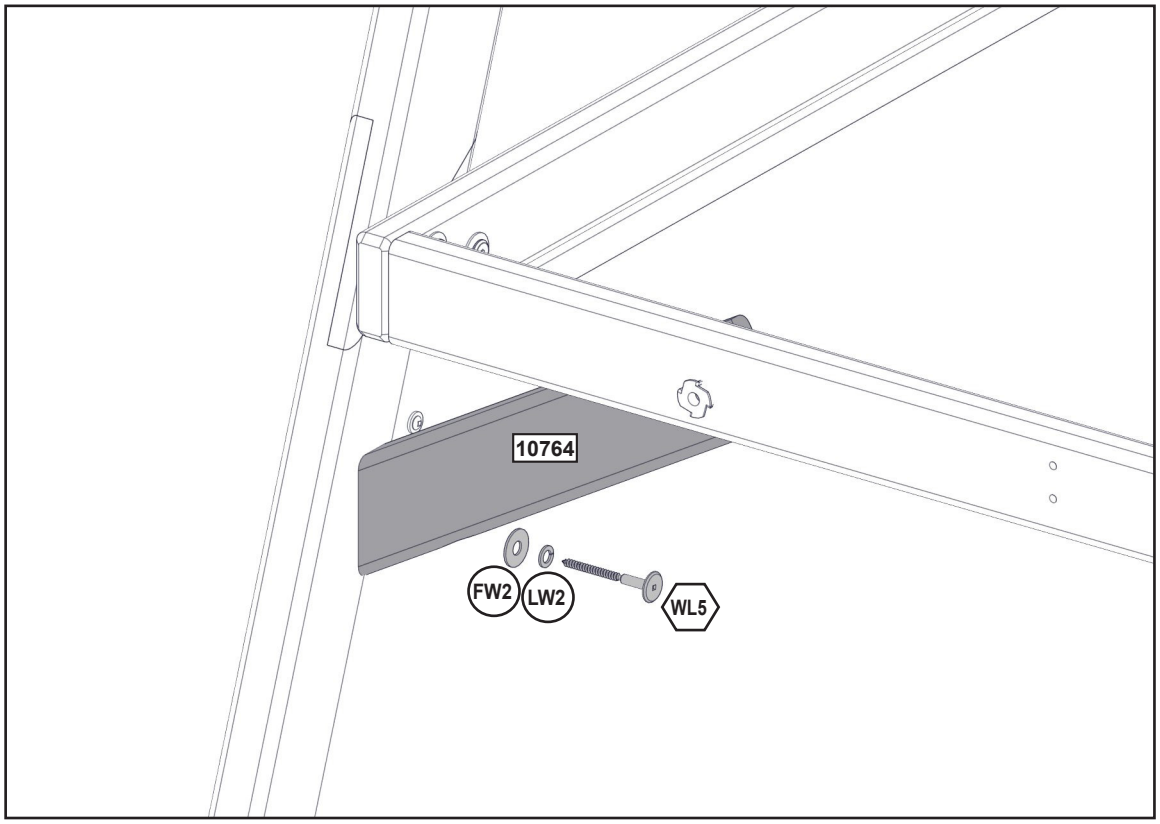

Hardware **Hardware**

2 x WL5 **6.4mm x 63.5 mm (1/4 x 2-1/2 in)(FW2, LW2)**

europecustomerservice@kidkraft.com
+31 20 305 8620
M-F from 09:00 to 17:30 (GMT+1)

parts.kidkraft.eu

23

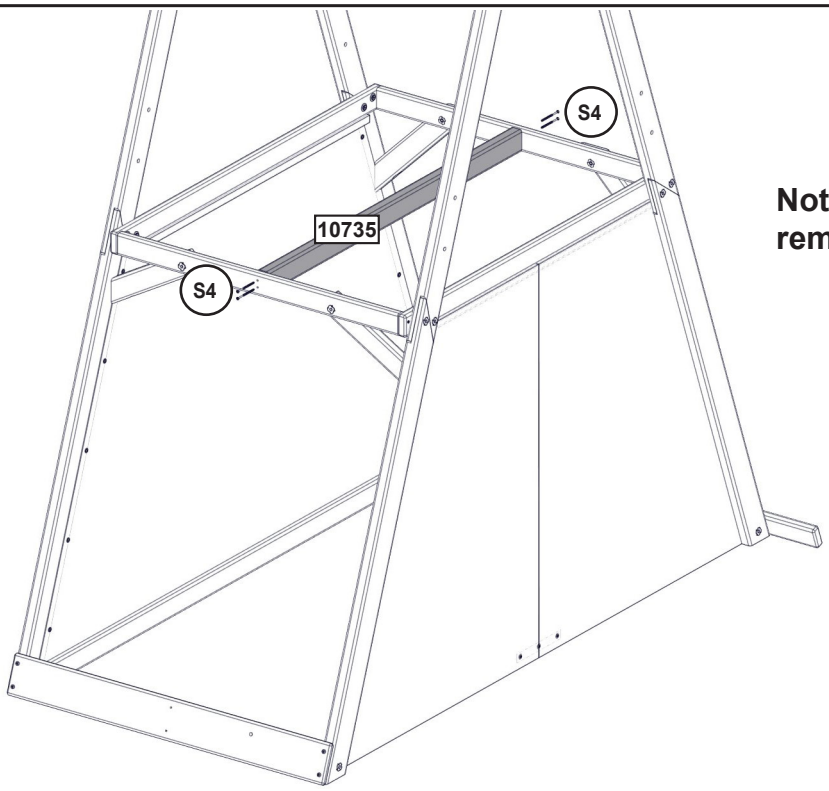

Note: Structure partly removed for clarity.

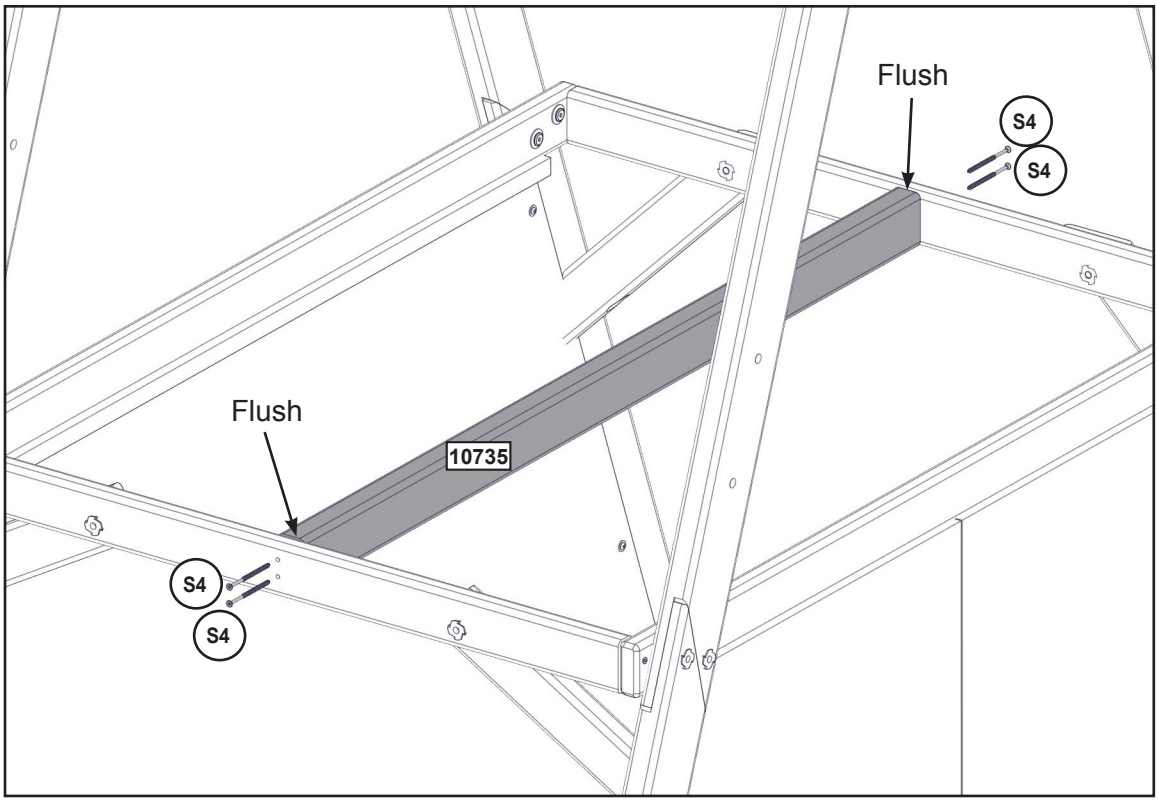

Wood Parts

1 x 10735 34.9 x 63.5 x 1155.7 mm (1 3/8" X 2 1/2" X 45 1/2")

Hardware

4 x S4 #8 x 76.2mm (#8 x 3")

24 **Pre-drill holes using a 1/8” drill bit.**

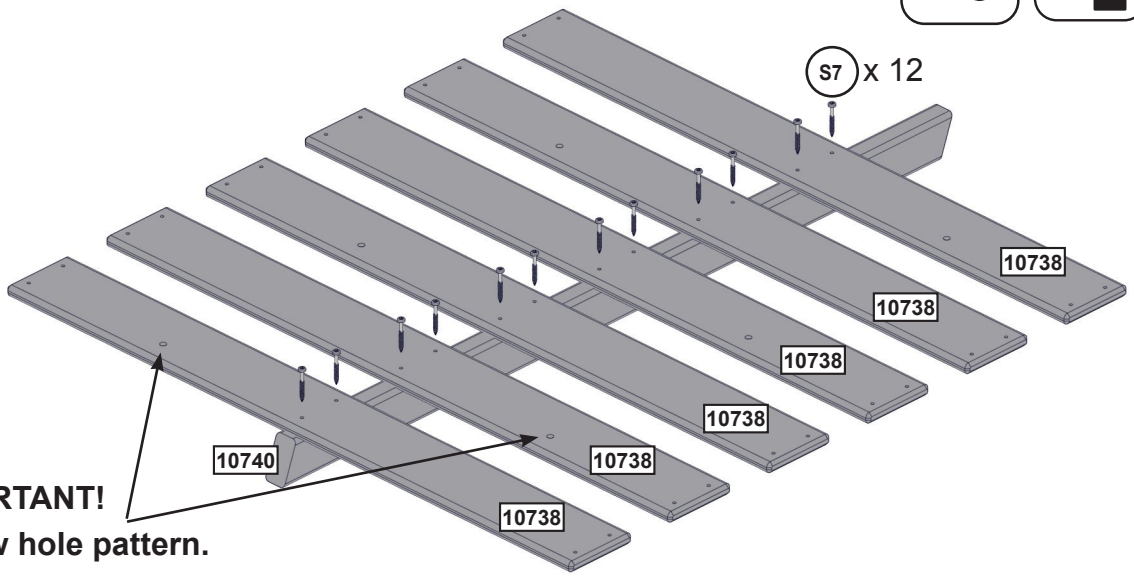

IMPORTANT!
Follow hole pattern.

Note: Stagger the holes in the rock boards

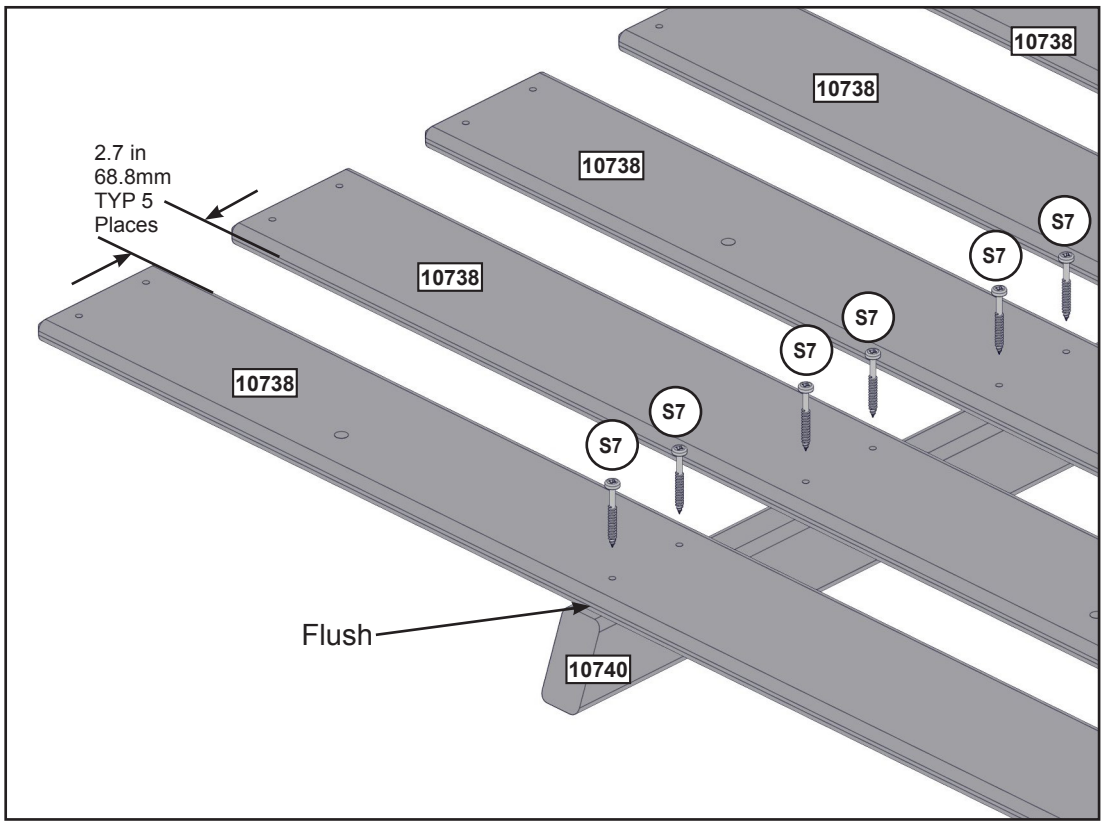

Wood Parts

6 x 10738 15.9 x 114.3 x 1035 mm (5/8” X 4 1/2” X 40 3/4”)
1 x 10740 34.9 x 63.5 x 1236 mm (1 3/8” X 2 1/2” X 48 11/16”)

Hardware

12 x S7 #12 x 50.8mm (#12 x 2”)

europecustomerservice@kidkraft.com
+31 20 305 8620
M-F from 09:00 to 17:30 (GMT+1)

parts.kidkraft.eu

25

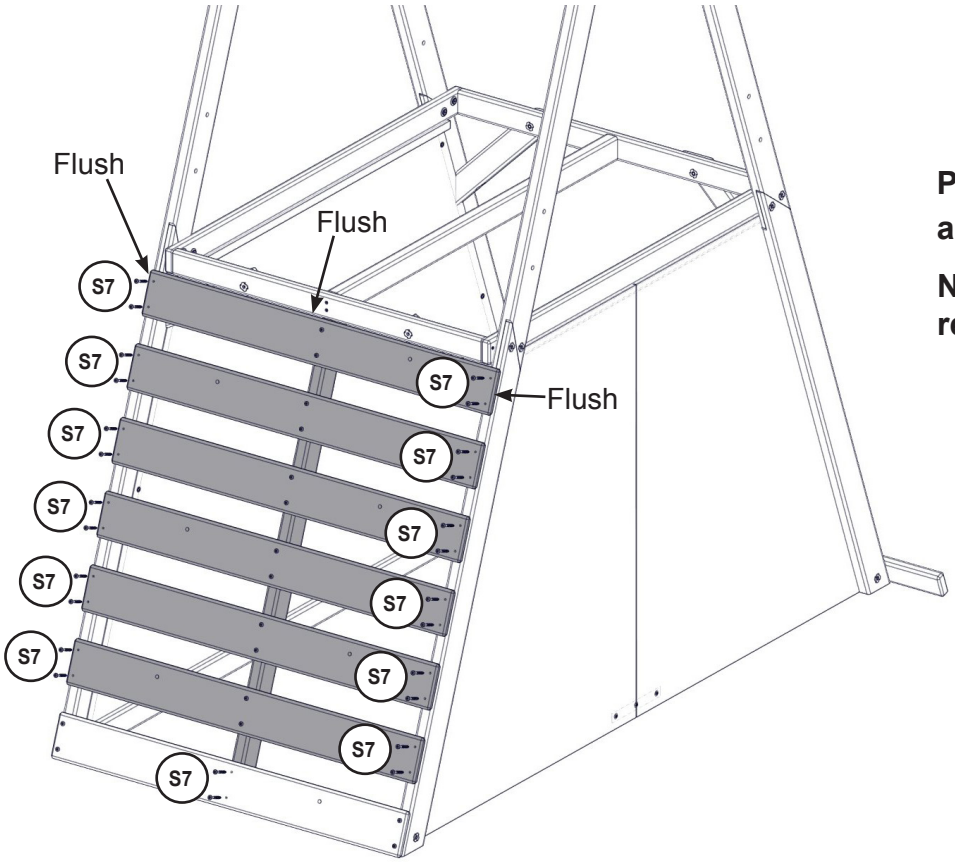

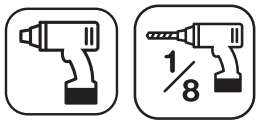

Pre-drill holes using a 1/8” drill bit.

Note: Structure partly removed for clarity.

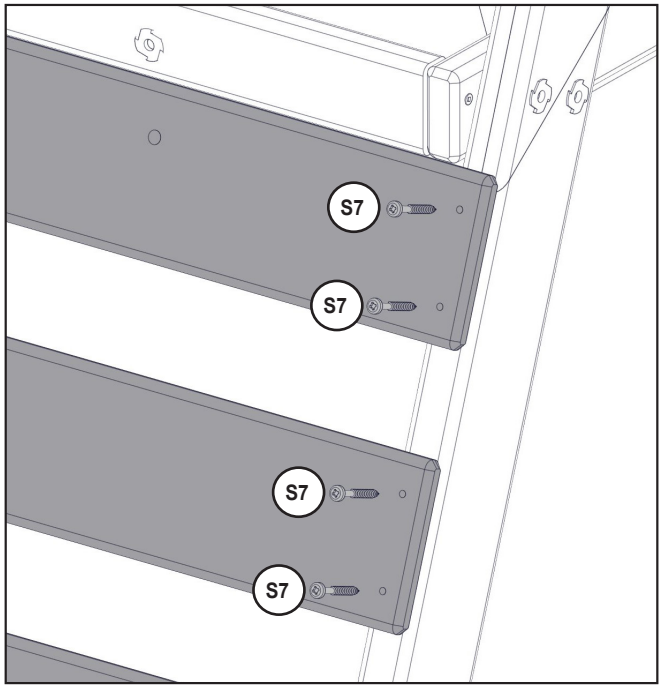

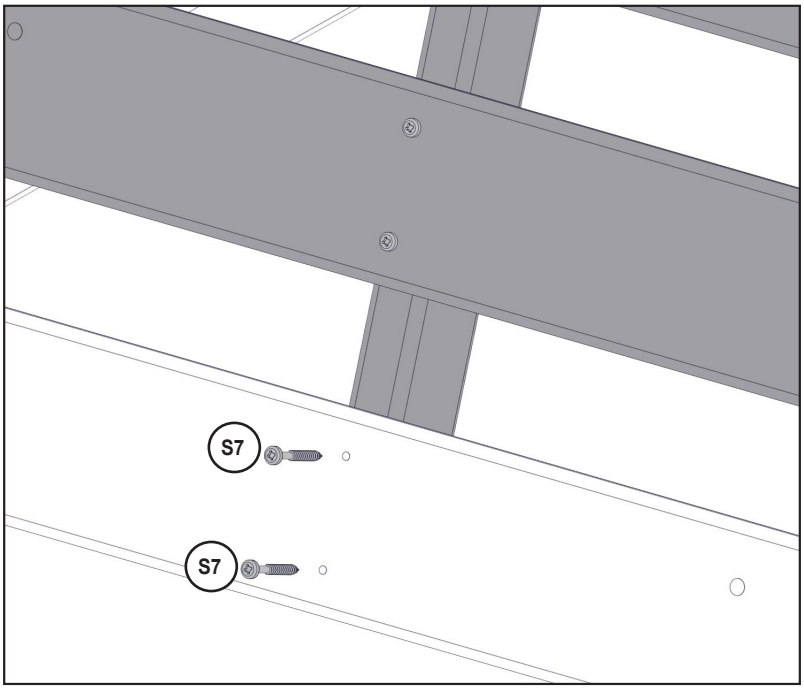

Hardware

26 x (S7) #12 x 50.8mm (#12 x 2”)

26

Note: Structure partly removed for clarity.

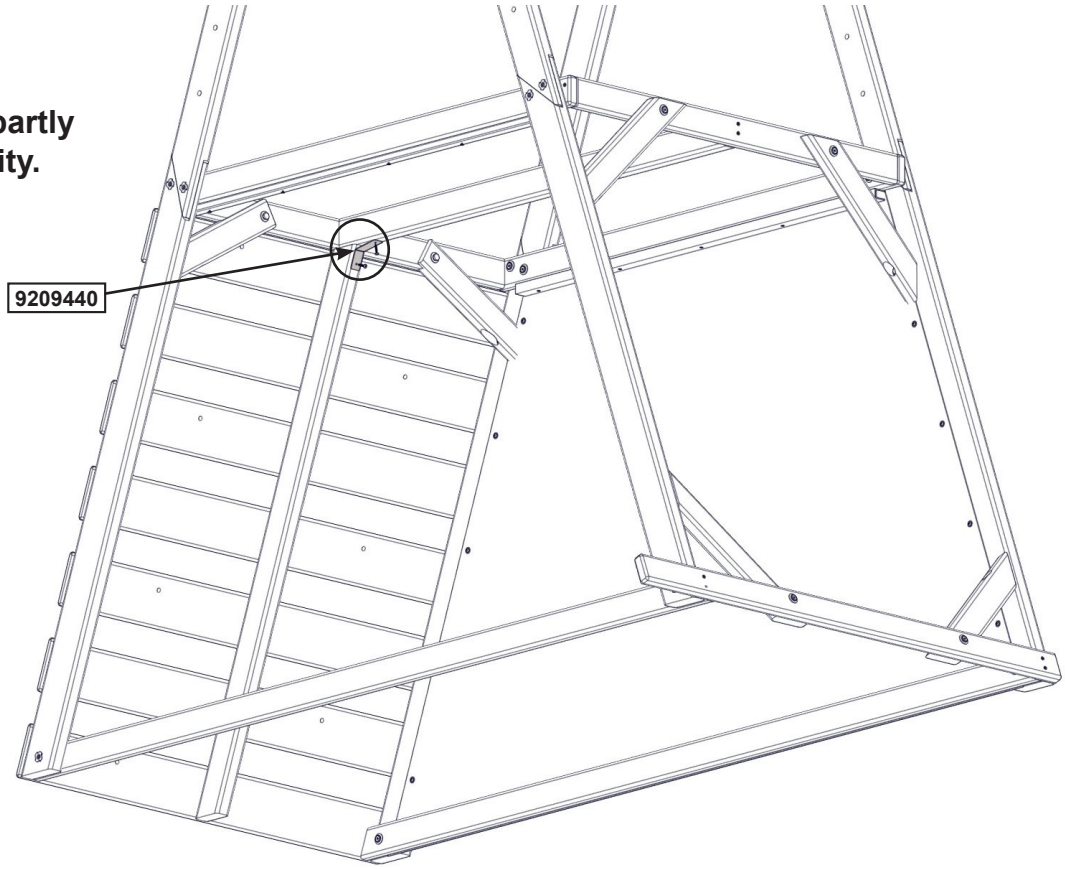

Underneath View

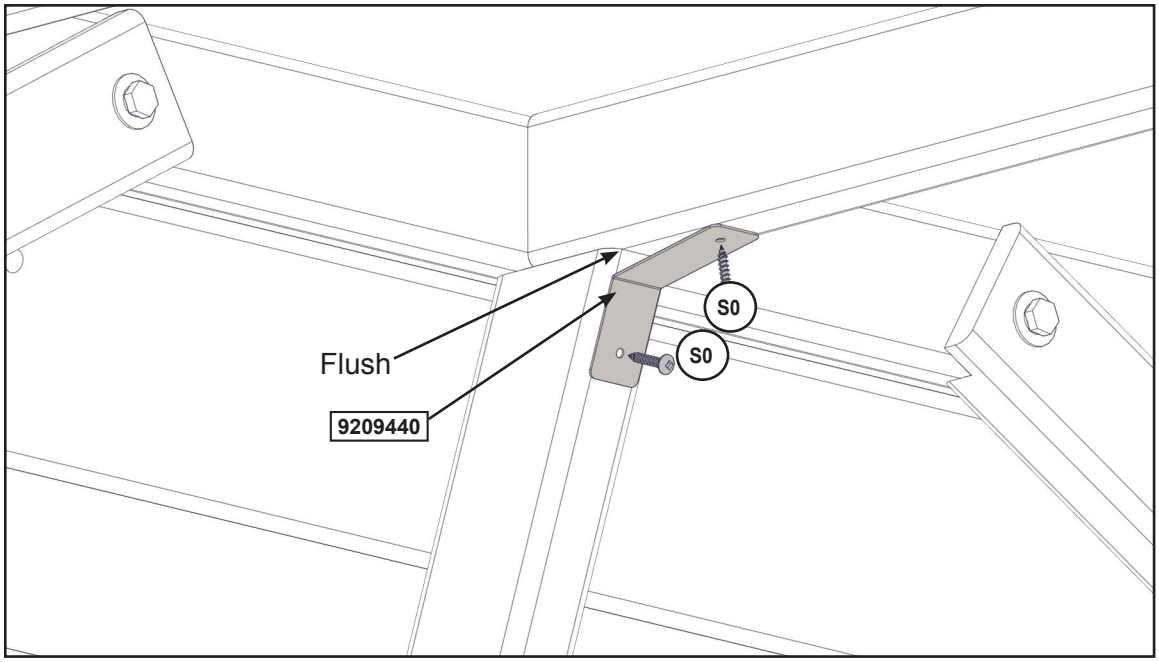

Hardware

2 x (S0) #8 x 22.2mm (#8 x 7/8")

Other Parts

1 x 9209440

europecustomerservice@kidkraft.com
+31 20 305 8620
M-F from 09:00 to 17:30 (GMT+1)

parts.kidkraft.eu

27

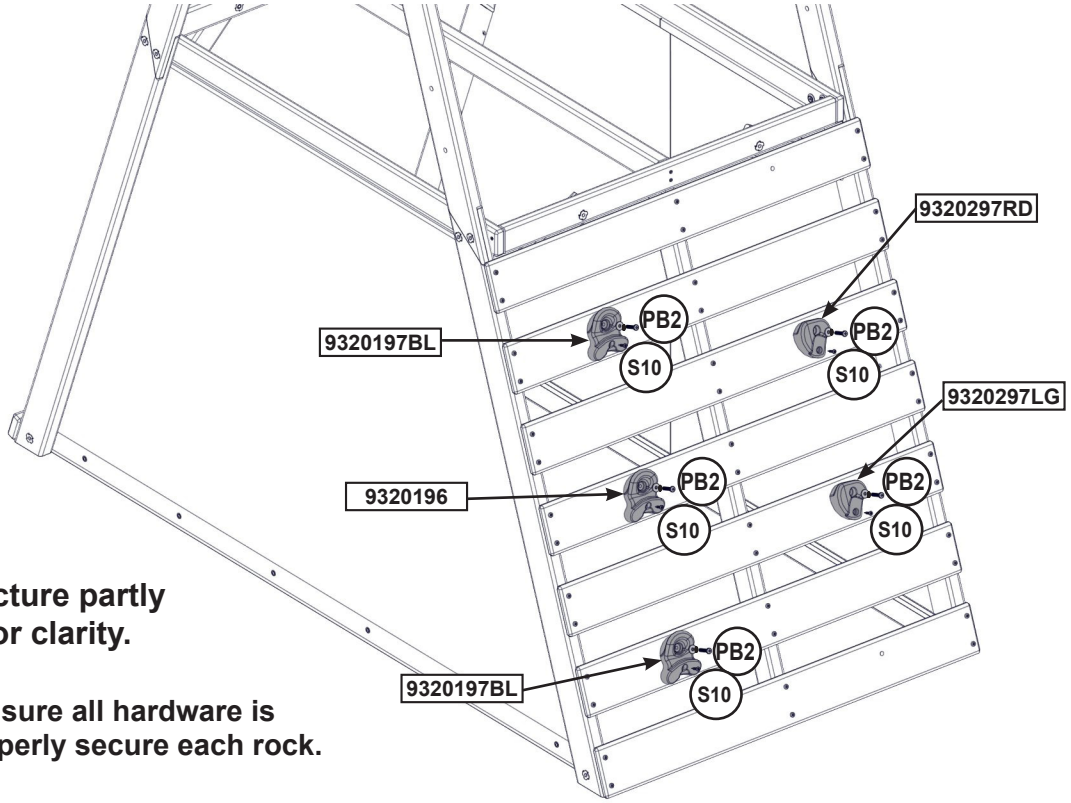

Note: Structure partly removed for clarity.

Note: Make sure all hardware is used to properly secure each rock.

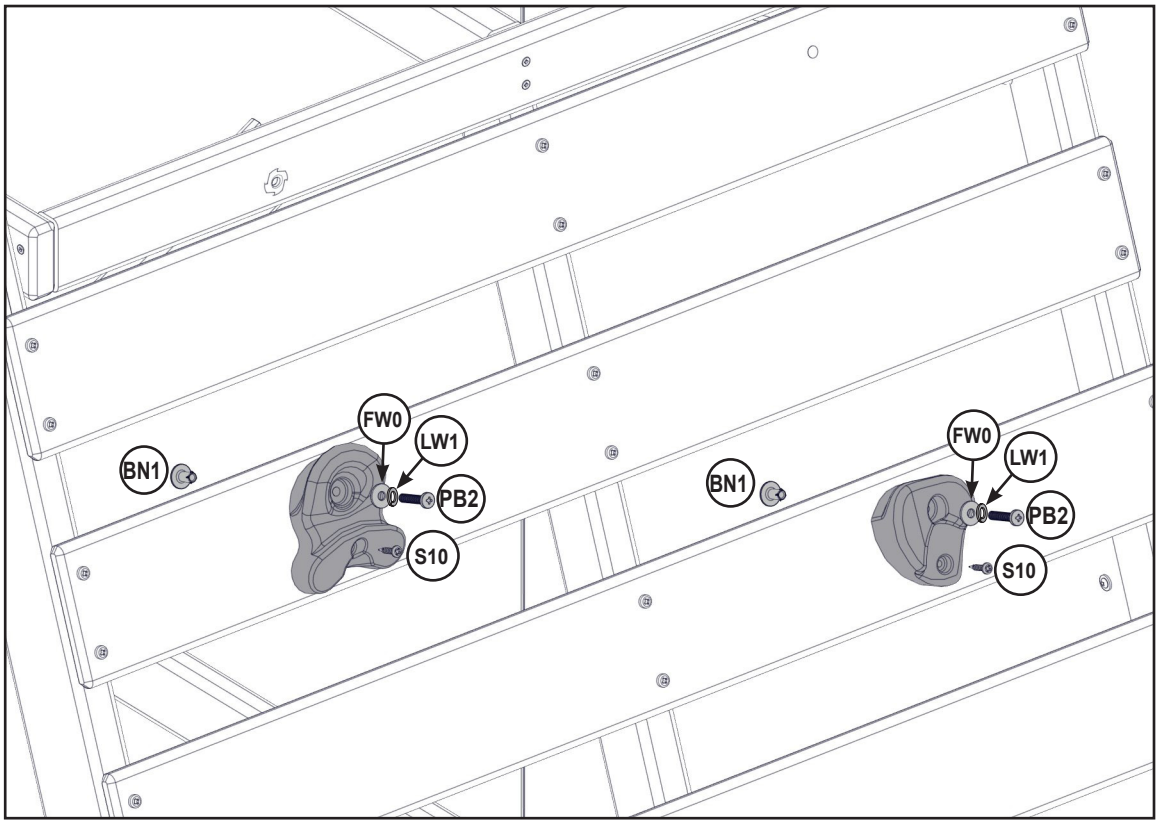

Hardware

5 x (PB2) 6.4mm x 31.8 mm (1/4 x 1-1/4") (FW0,LW1,BN1)

5 x (S10) #8 x 25.4 mm (#8 x 1")

Other Parts

2 x 9320197BL

1 x 9320196

1 x 9320297RD

1 x 9320297LG

28

Pre-drill holes using a 3/16” drill bit.
Note: Structure partly removed for clarity.

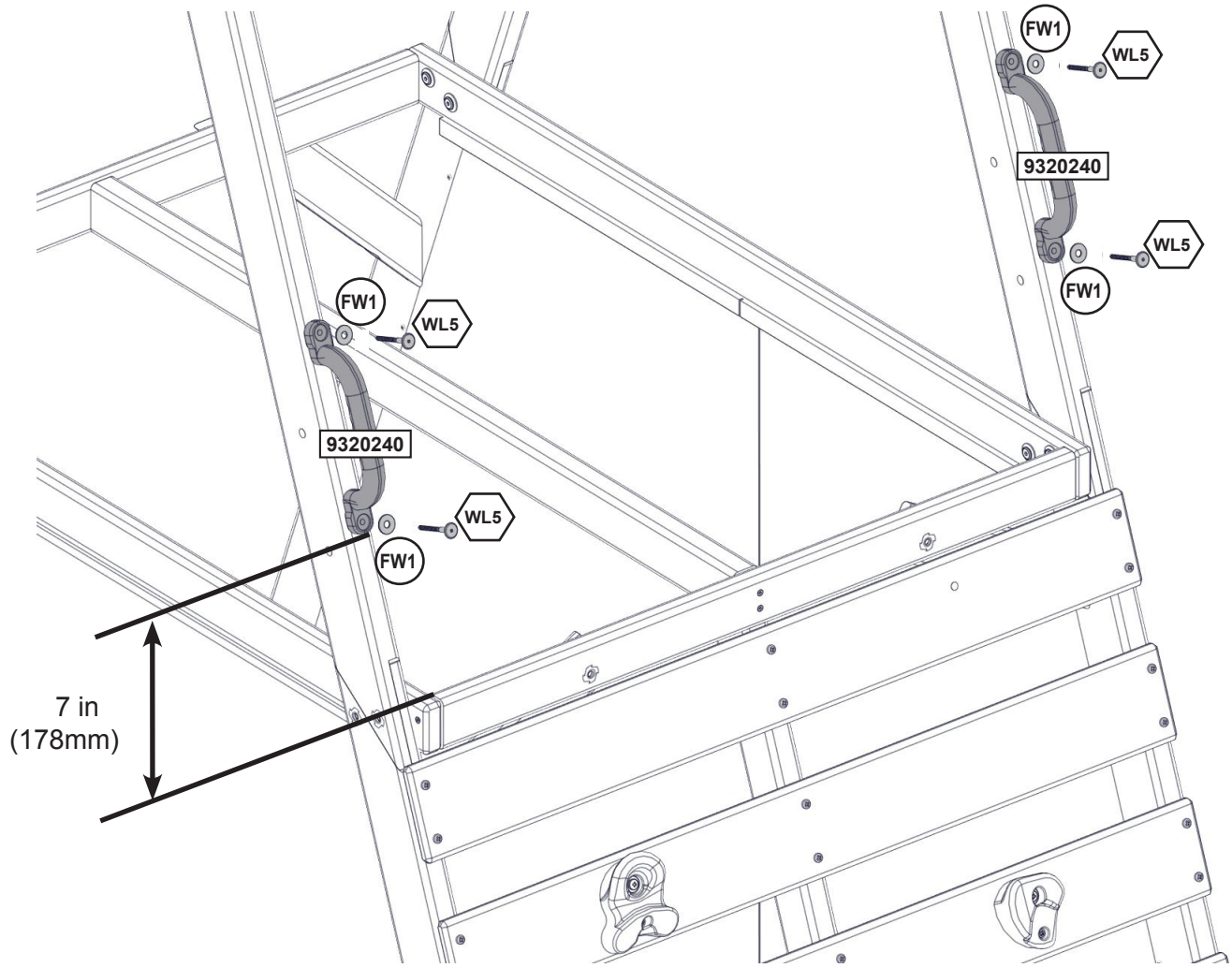

Hardware

4 x WL5 6.4mm x 63.5 mm (1/4 x 2-1/2 in)(FW1)

Other Parts

2 x 9320240

europecustomerservice@kidkraft.com
+31 20 305 8620
M-F from 09:00 to 17:30 (GMT+1)

parts.kidkraft.eu

29

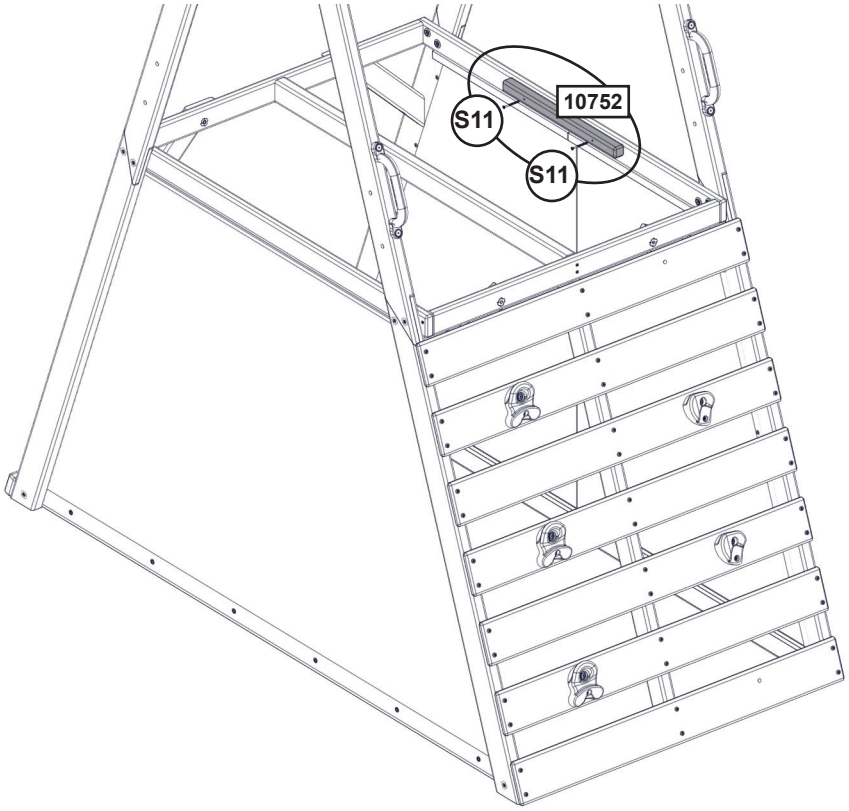

Note: Structure partly removed for clarity.

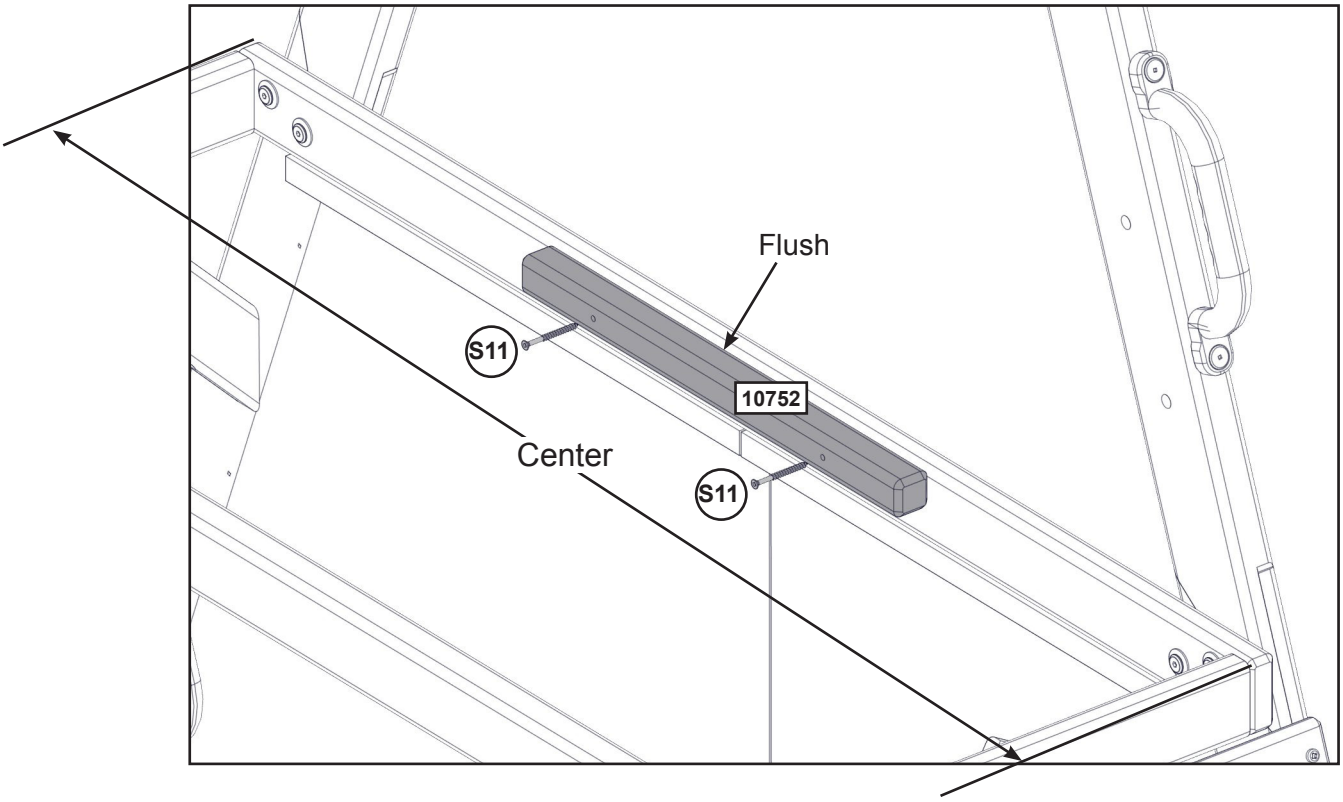

Wood Parts

1 x 10752 31.8 x 31.8 x 450 mm (1 1/4" X 1 1/4" X 17 11/16")

Hardware

2 x S11 #8 x 50.8mm (#8 x 2 in)

30

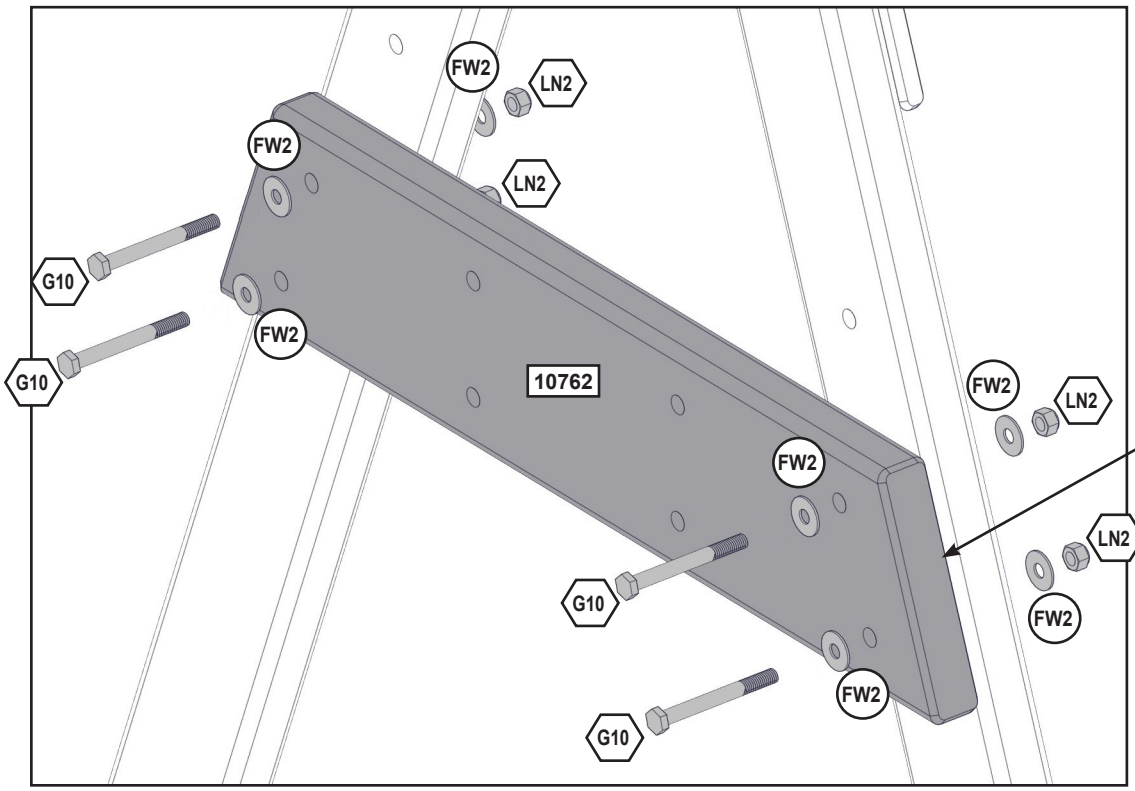

Note: Structure partly removed for clarity.

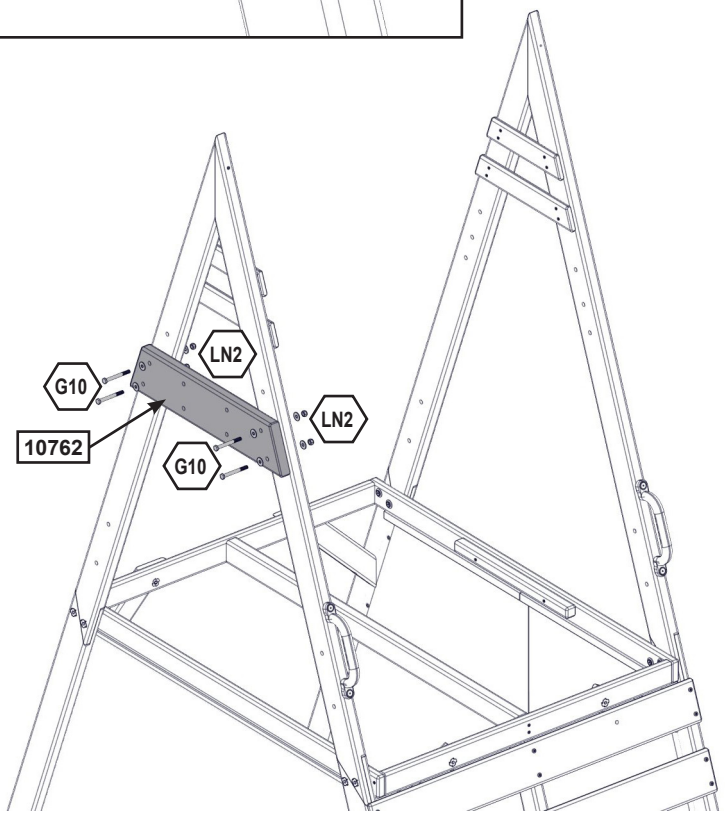

Wood Parts

1 x 10762 31.8 x 133.4 x 608 mm (1 1/4" X 5 1/4" X 23 15/16")

Hardware

4 x G10 7.9mm x 76.2mm (5/16" x 3")(FW2 x 2, LN2)

31

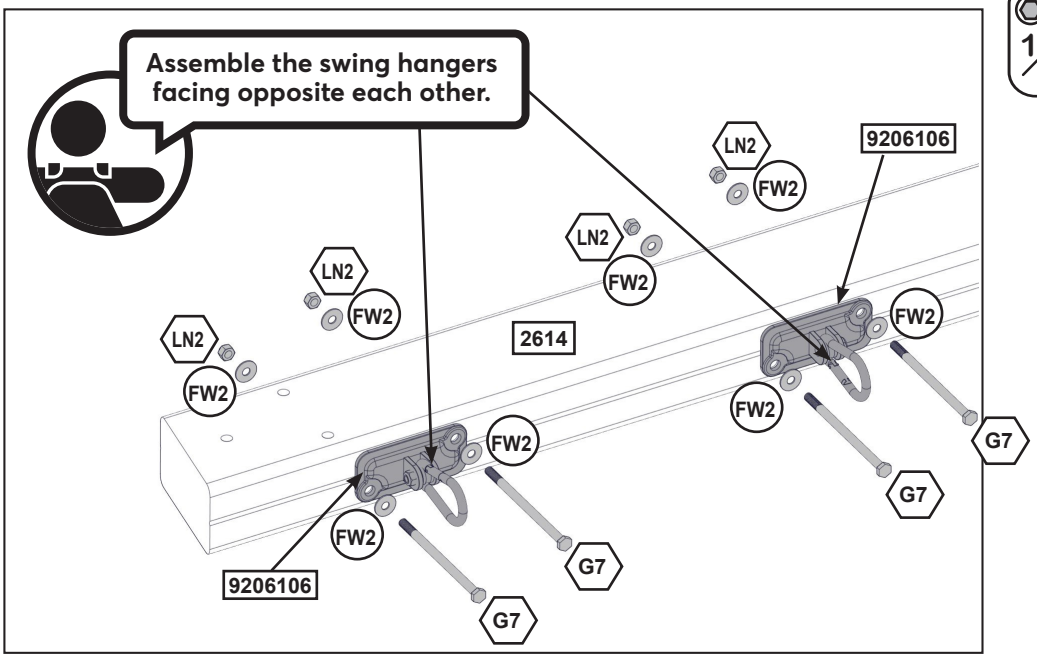

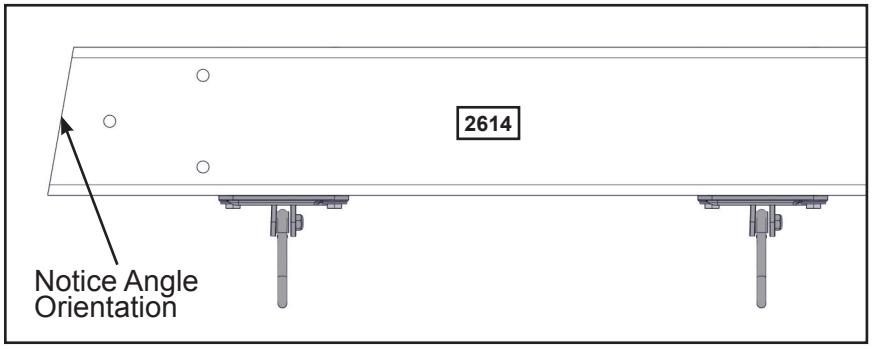

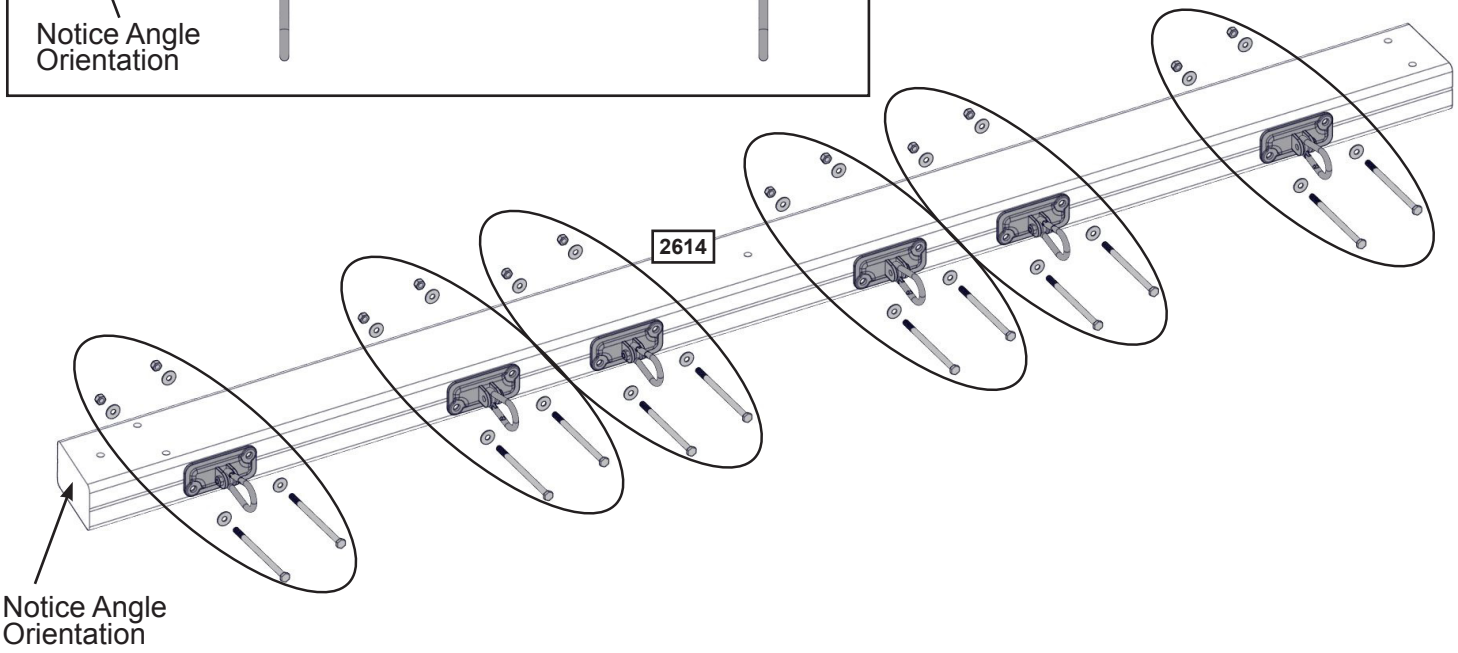

Wood Parts

1 x 2614 76.2 x 133.4 x 2235.2 mm (3" X 5 1/4" X 88")

Hardware

12 x G7 7.9 x 139.7 mm (5/16 x 5-1/2") (LN2, 2 x FW2)

Other Parts

6 x 9206106

32

Assemble T-Nuts first with hammer!

IT IS IMPORTANT THAT THIS BOLT IS ATTACHED. IT WILL MINIMIZE CHECKING OF WOOD.

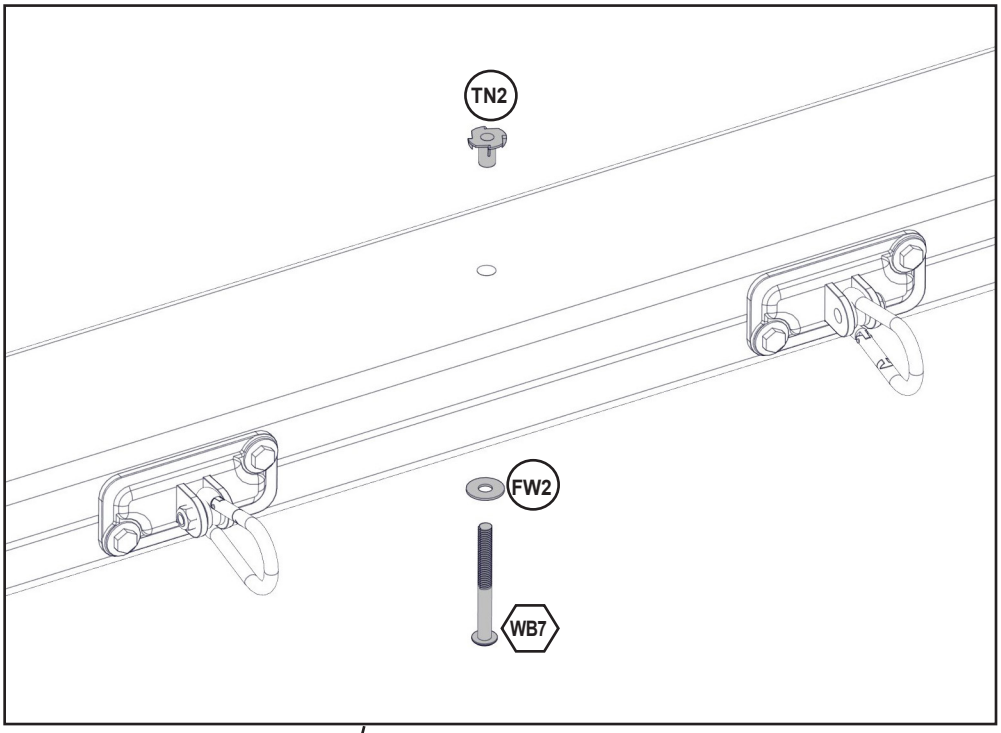

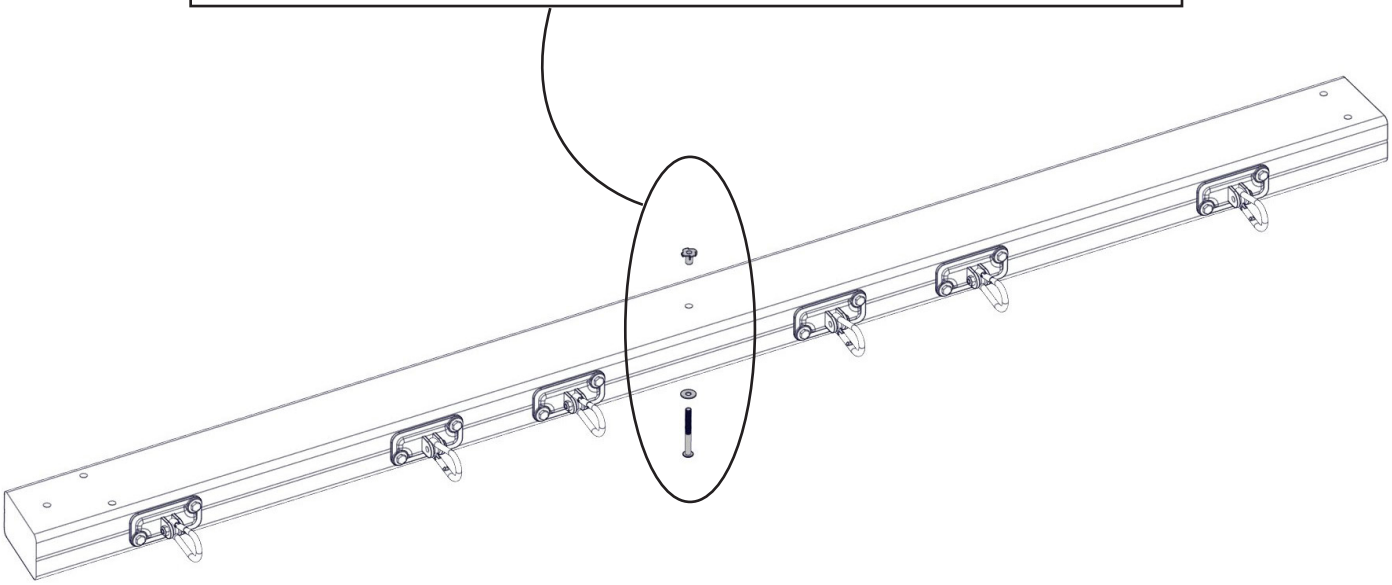

Hardware

1 x WB7 7.9 x 76.2mm (5/16 x 3") (FW2 , TN2)

33

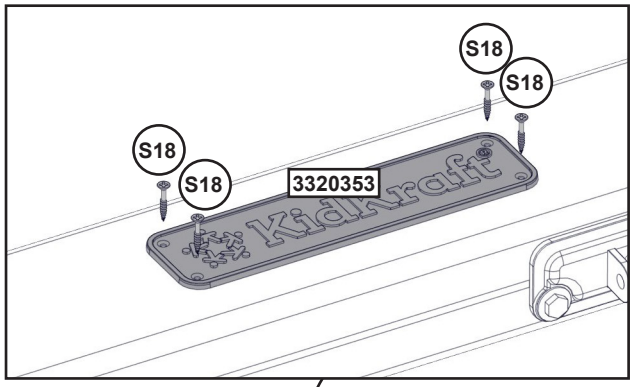

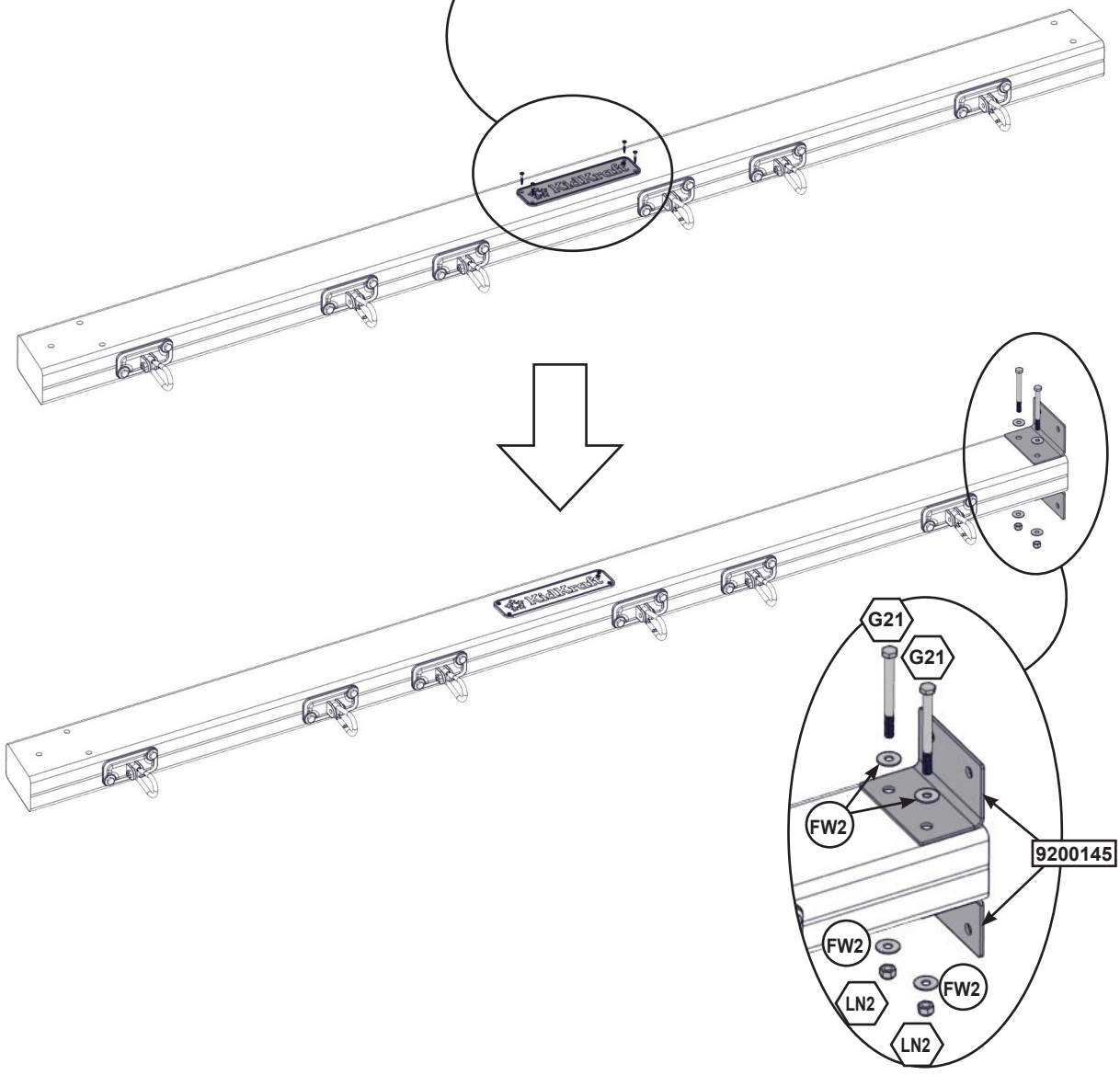

Hardware

2 x G21 7.9 x 95 mm (5/16 x 3-3/4") (2 x FW2, LN2)

4 x S18 #6 x 25.4 mm (#6 x 1")

Other Parts

2 x 9200145

1 x 3320353

34



Assemble T-Nuts first with hammer!

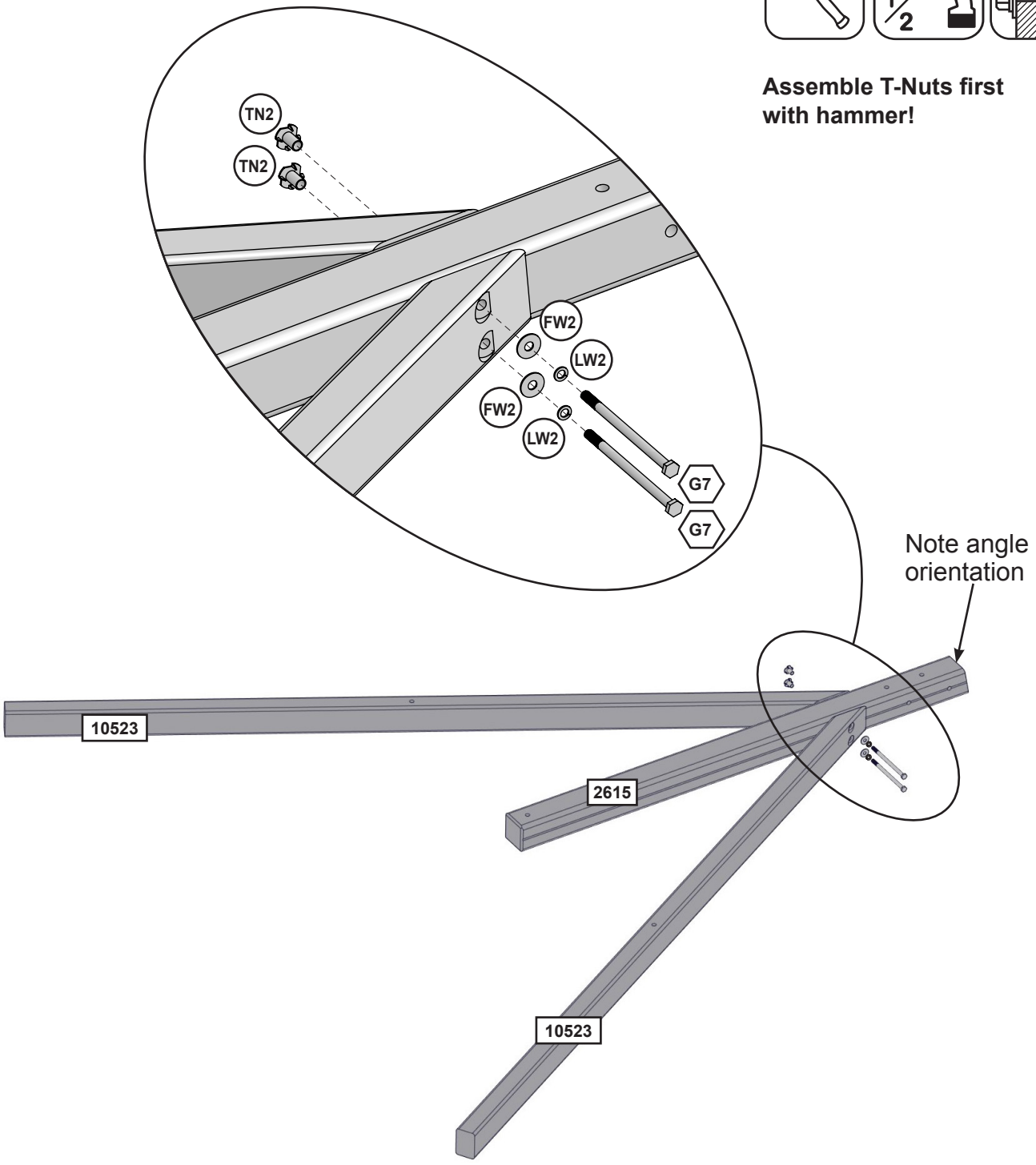

Wood Parts

2 x 10523 50.8 x 76.2 x 2063.9 mm (2" x 3" x 81 1/4")

1 x 2615 76.2 x 76.2 x 1294.3 mm (3" x 3" x 50 15/16")

Hardware

2 x G7 7.9 x 139.7 mm (5/16 x 5-1/2") (LW2, FW2, TN2)

europecustomerservice@kidkraft.com
+31 20 305 8620
M-F from 09:00 to 17:30 (GMT+1)

parts.kidkraft.eu

35

IT IS IMPORTANT THAT THESE BOLTS ARE ATTACHED. THEY WILL MINIMIZE CHECKING OF WOOD.

Assemble T-Nuts first with hammer!

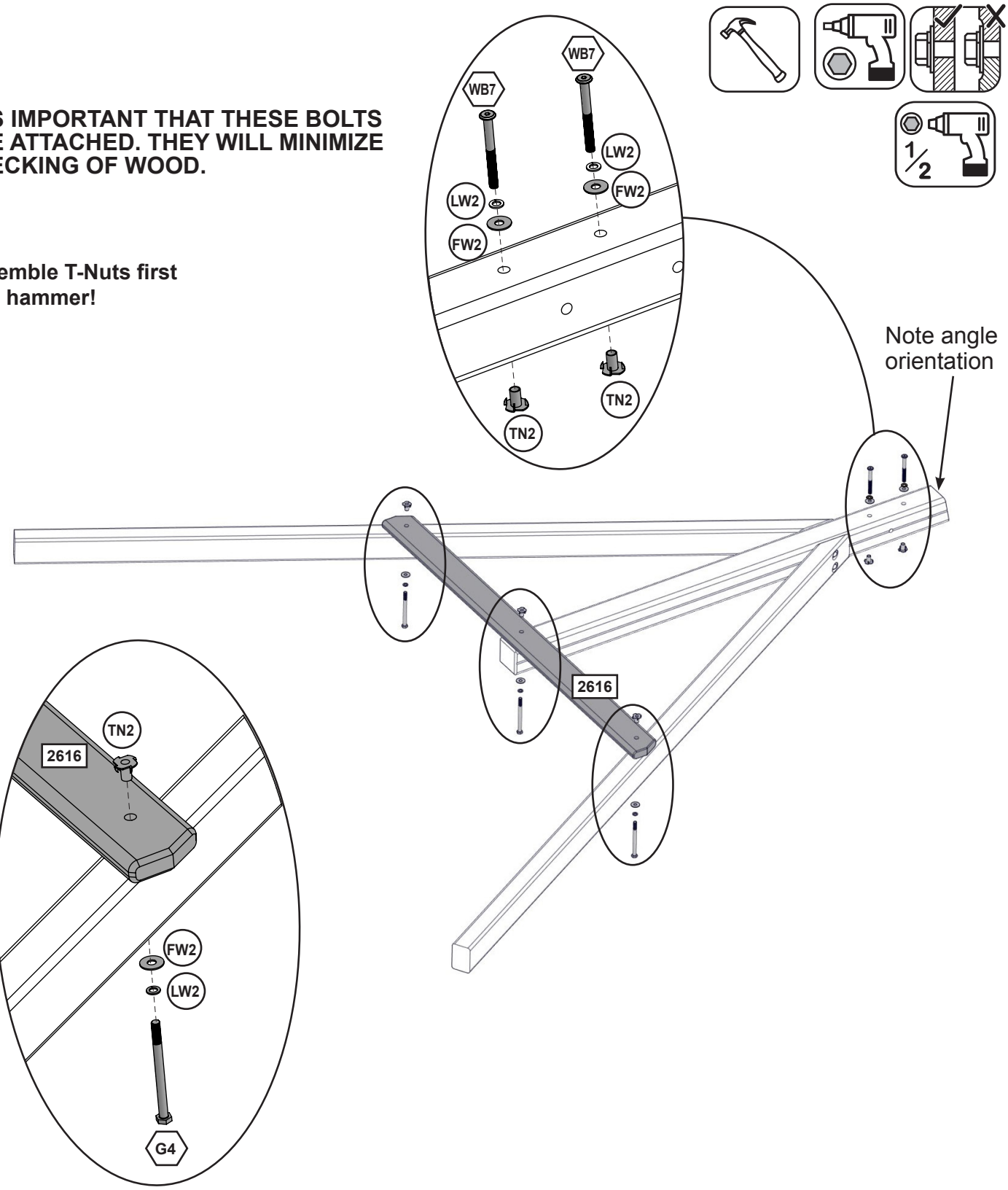

Wood Parts

1 x 2616 23.8 x 82.6 x 1181.1 mm (15/16" x 3 1/4" x 46 1/2")

Hardware

3 x G4 7.9 x 101.6mm (5/16 x 4") (LW2, FW2, TN2)

2 x WB7 7.9 x 76.2mm (5/16 x 3") (LW2, FW2, TN2)

36

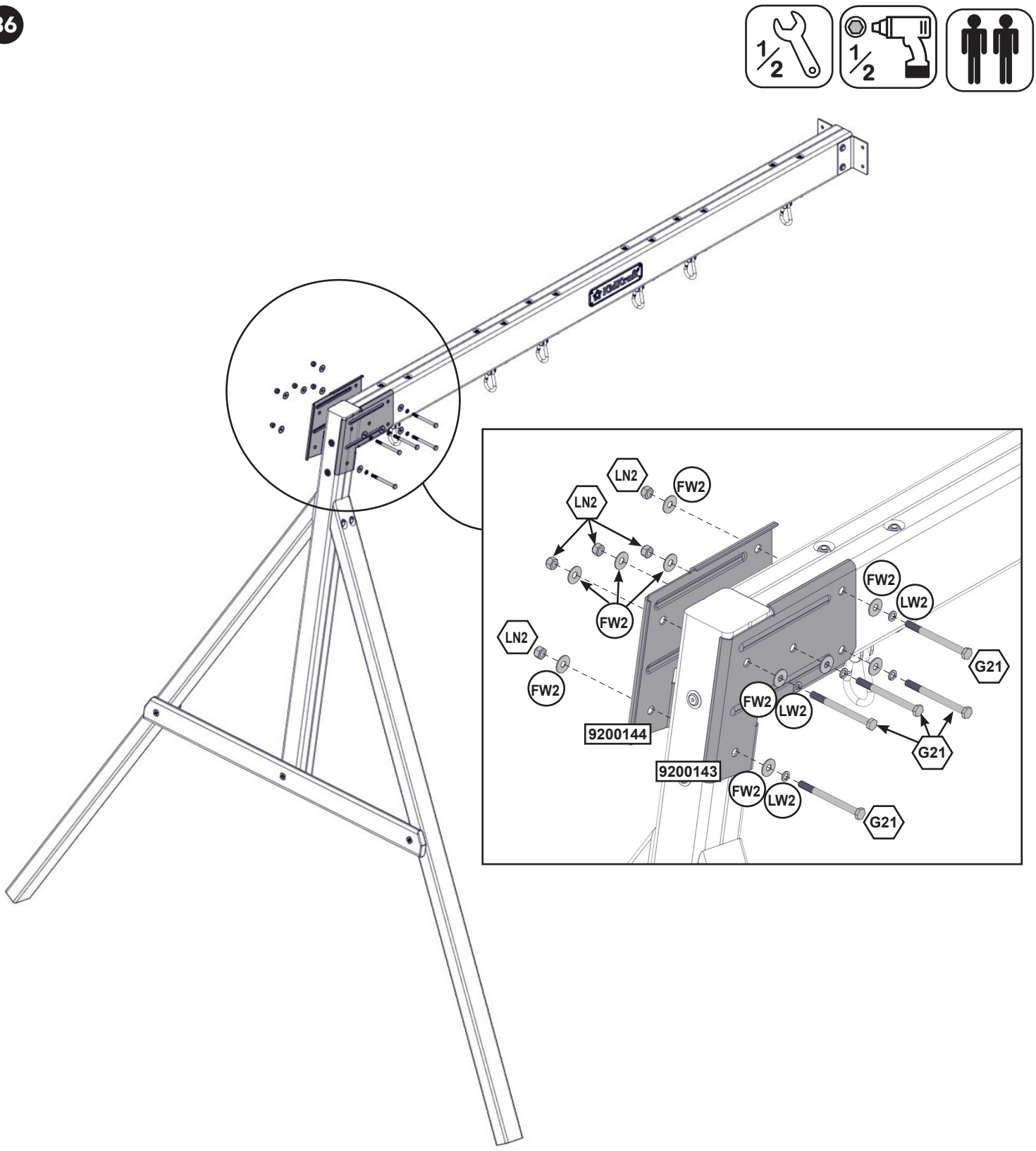

Hardware

5 x G21 7.9 x 95 mm (5/16 x 3-3/4") (LW2, LN2, 2 x FW2)

Other Parts

1 x 9200143

1 x 9200144

europecustomerservice@kidkraft.com
+31 20 305 8620
M-F from 09:00 to 17:30 (GMT+1)

parts.kidkraft.eu

37

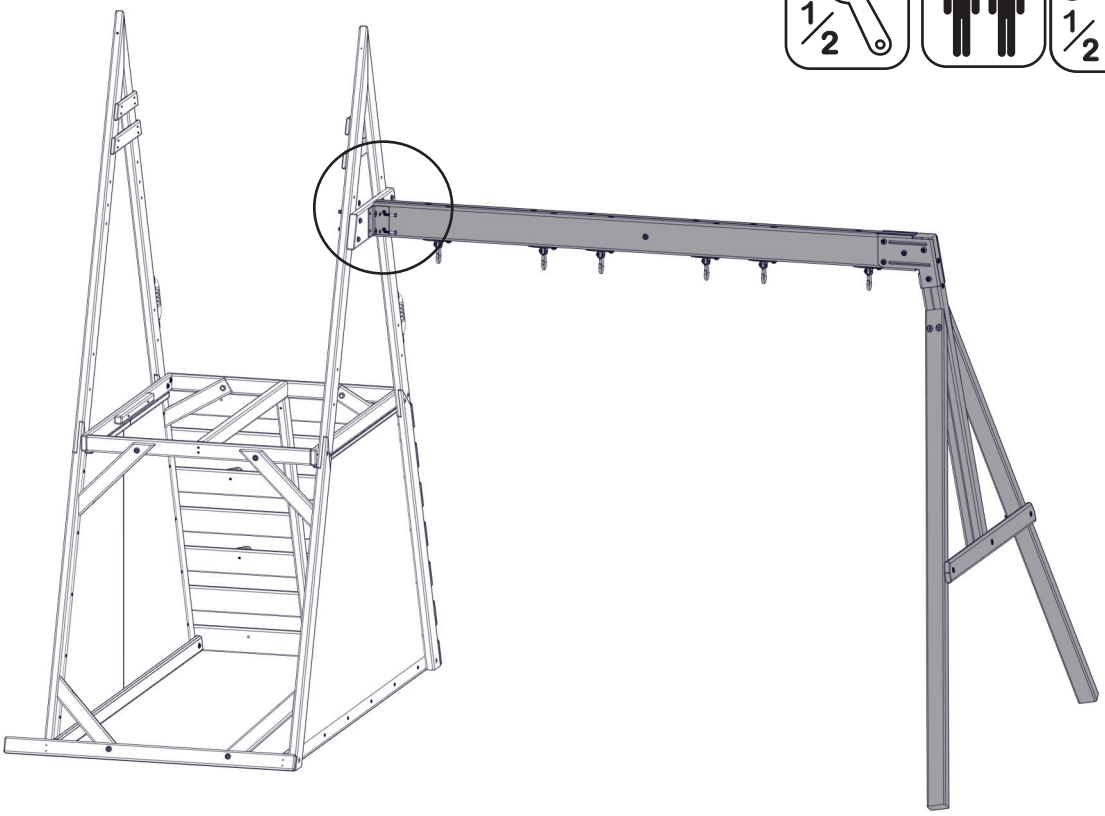

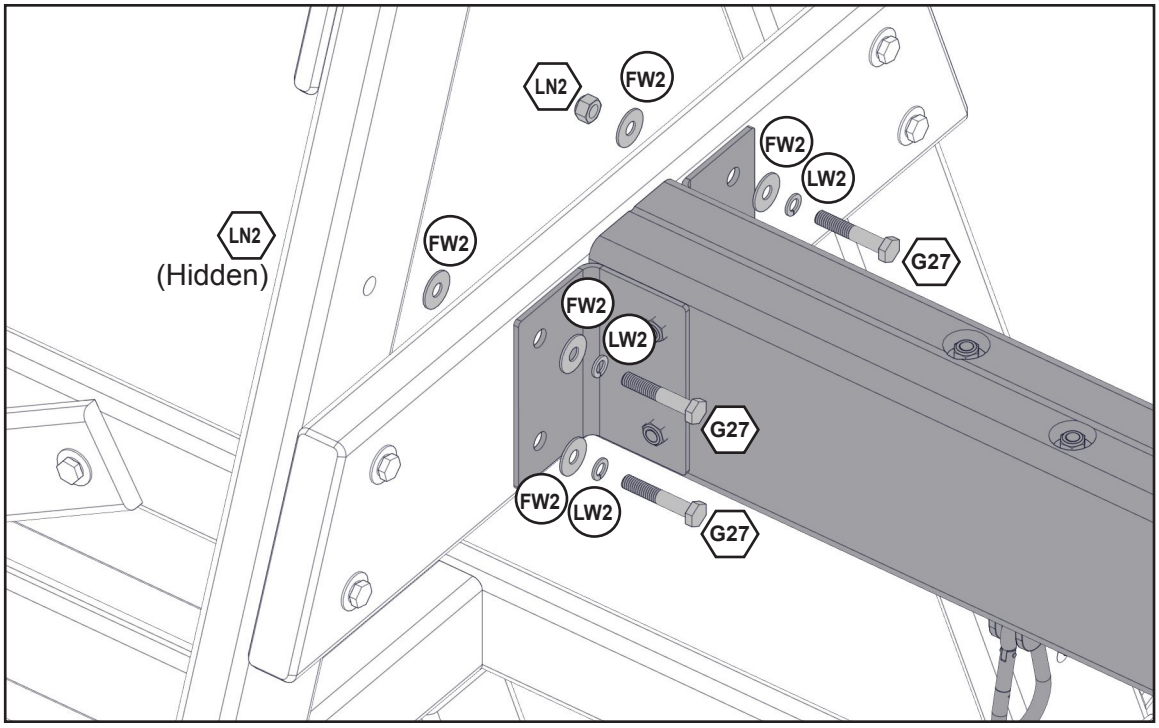

Hardware

4 x (G27) 7.9mm x 44.5 mm (5/16 x 1-3/4") (FW2 x 2, LW2, LN2)

38

MOVE FORT TO FINAL LOCATION PRIOR TO STAKING
FINAL LOCATION MUST BE LEVEL GROUND

Warning! To prevent tipping and avoid potential injury, stakes must be driven 13”(330mm) into ground. Digging or driving stakes can be dangerous if you do not check first for under-ground wiring, cables or gas lines.

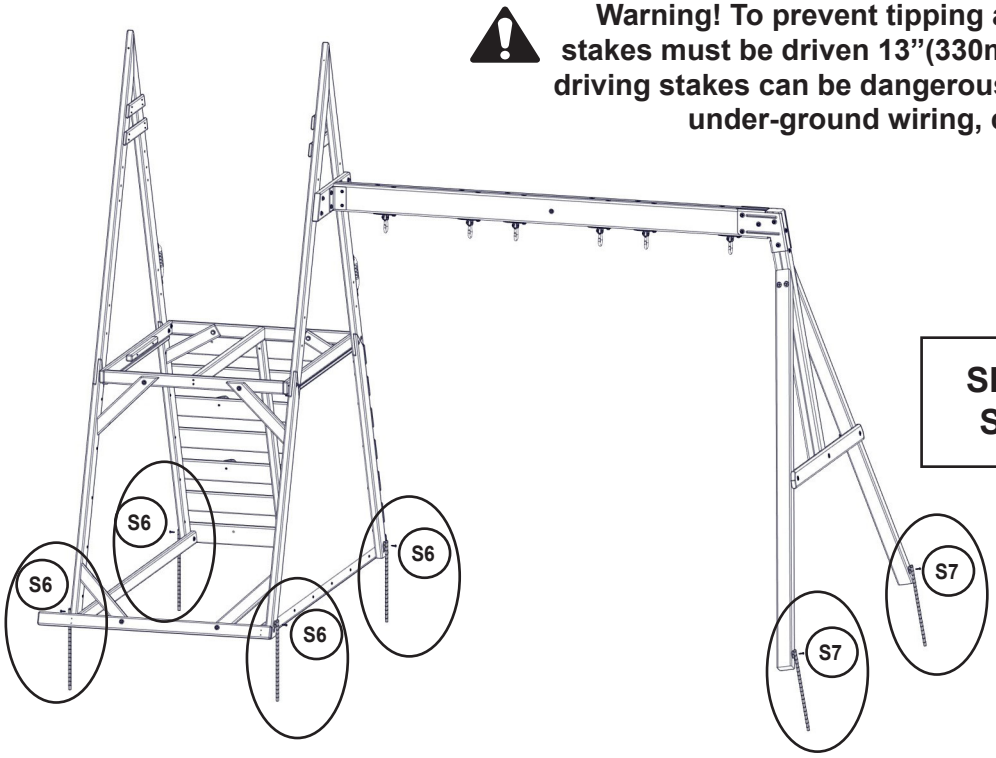

SEE COVER PAGE FOR SAFETY CLEARANCE

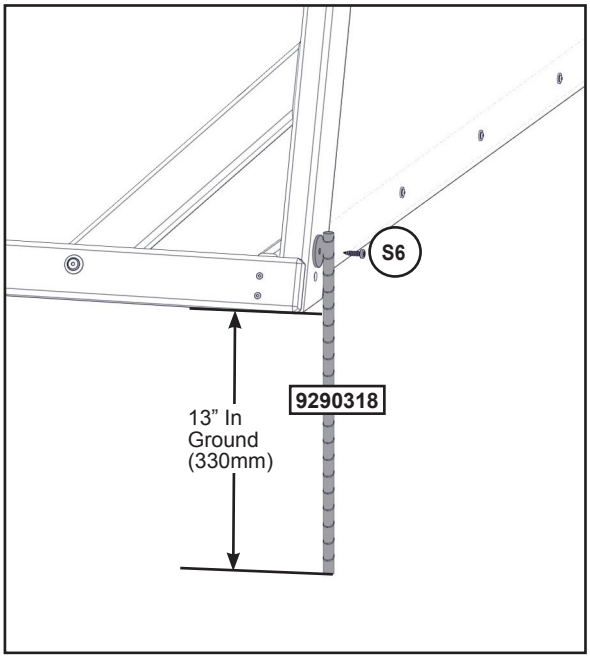

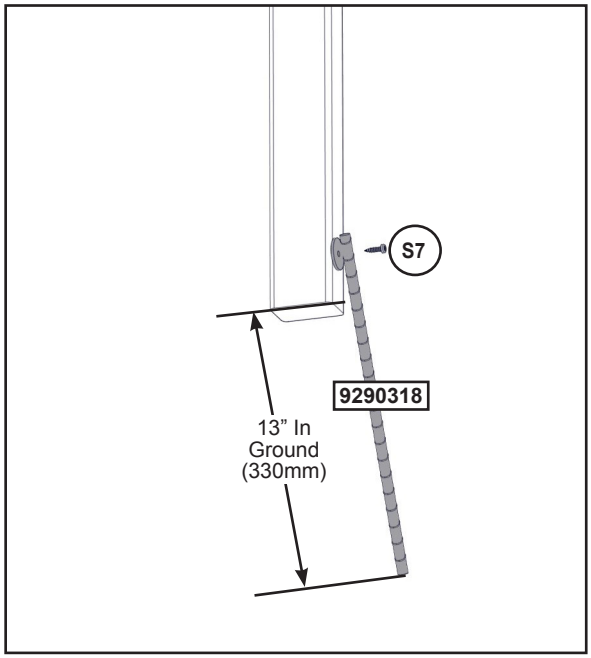

Hardware

2 x (S7) #12 x 50.8mm (#12 x 2”)

4 x (S6) #12 x 25.4mm (#12 x 1”)

Other Parts

6 x 9290318

europecustomerservice@kidkraft.com
+31 20 305 8620
M-F from 09:00 to 17:30 (GMT+1)

parts.kidkraft.eu

39

Evenly space the floor boards

Note: Structure partly removed for clarity.

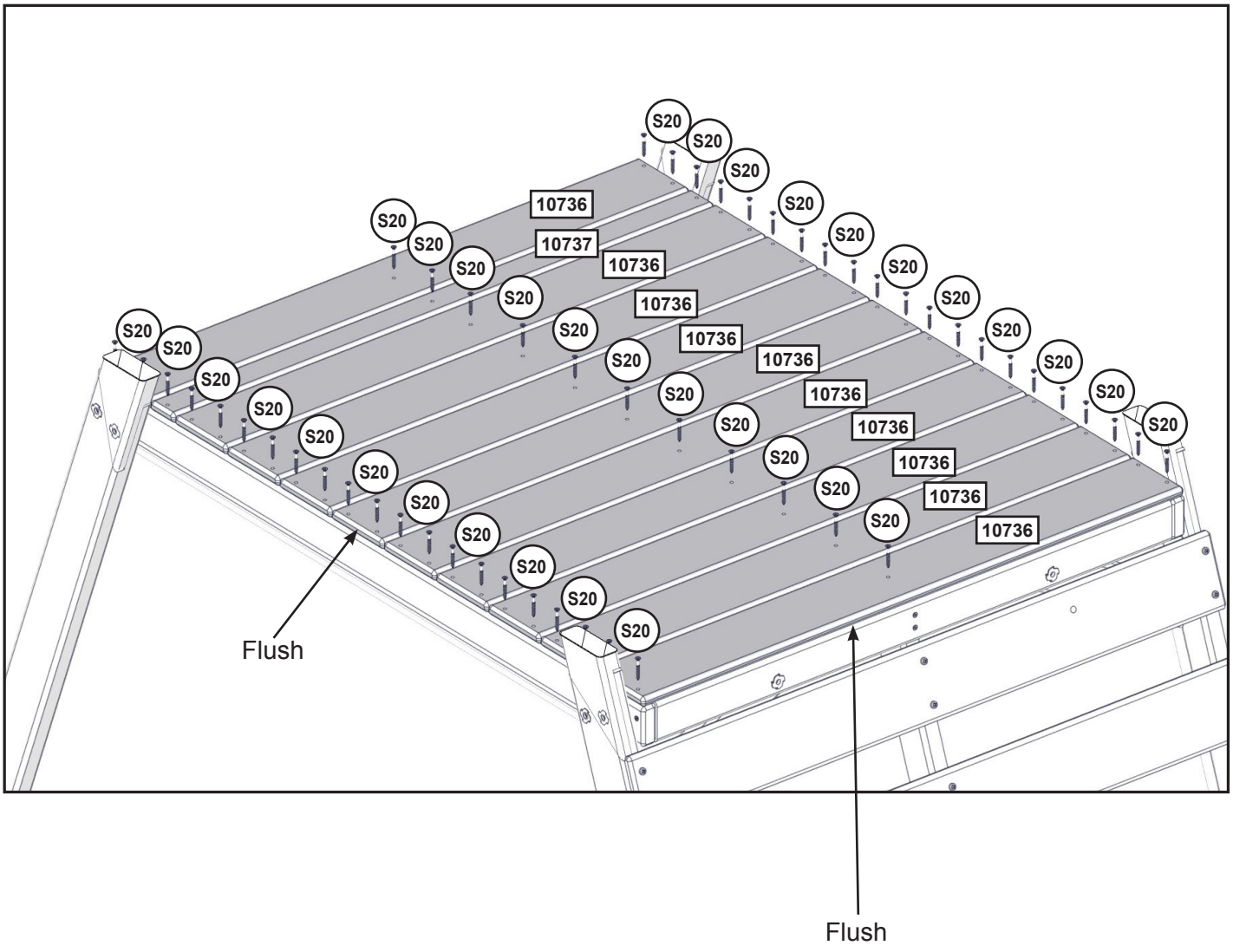

Wood Parts

10 x 10736 15.9 x 114.3 x 963 mm (5/8" X 4 1/2" X 37 15/16")
1 x 10737 15.9 x 53.5 x 963 mm (5/8" X 2 1/8" X 37 15/16")

Hardware

53 x S20 #8 x 34.9mm (#8 x 1-3/8")

40

Assemble T-Nuts first with hammer!

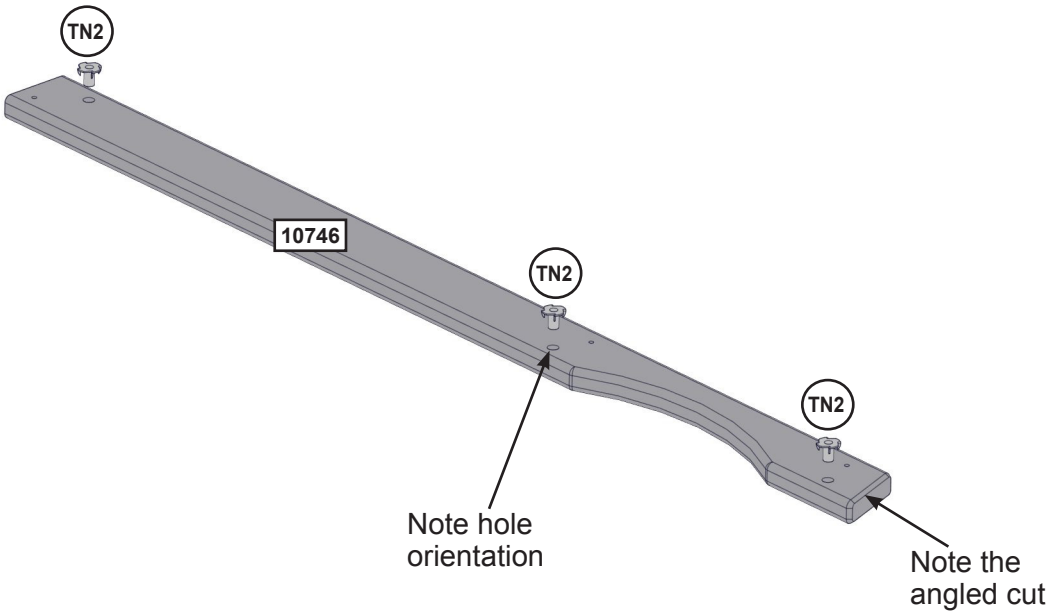

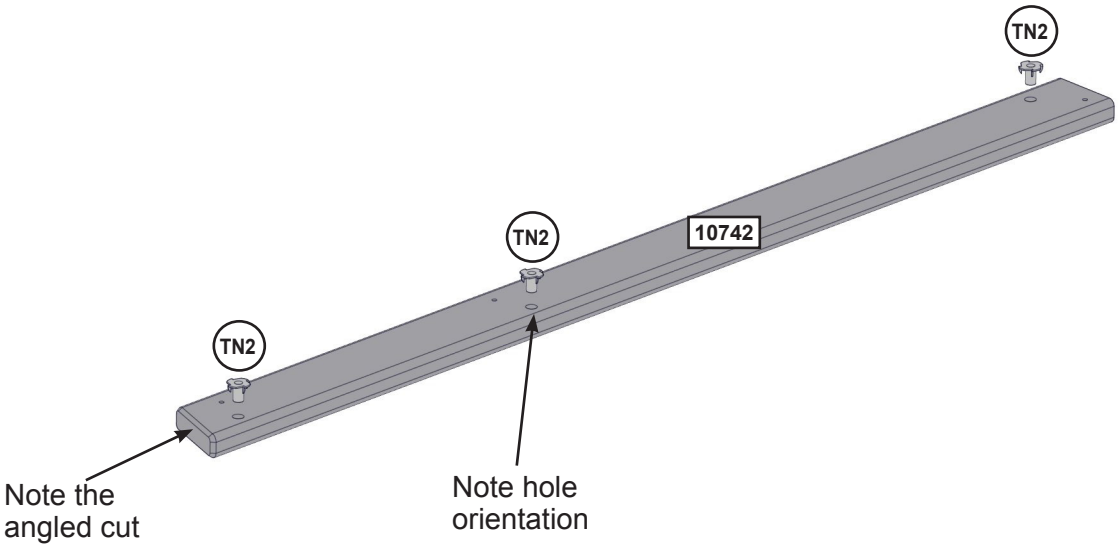

Wood Parts

1 x 10746 23.8 x 76.2 x 1169.7 mm (15/16" X 3" X 46")

1 x 10742 23.8 x 76.2 x 1169.7 mm (15/16" X 3" X 46")

Hardware

6 x TN2

41

Note: Structure partly removed for clarity.



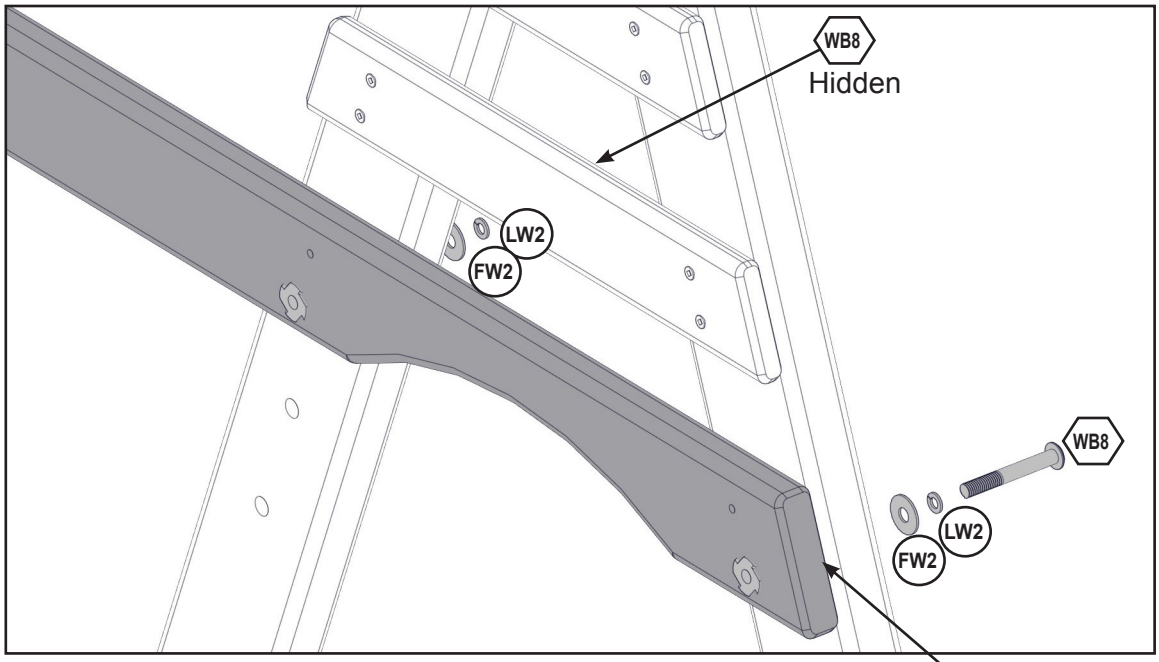

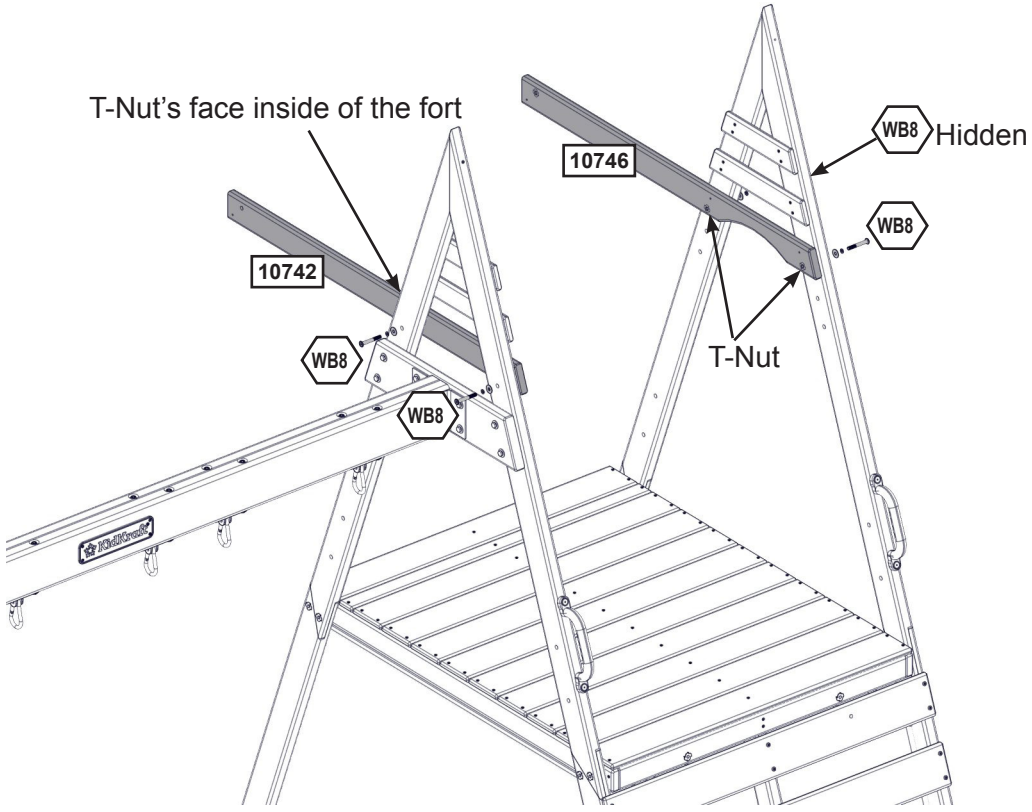

Hardware

4 x WB8 7.9mm x 60.3 mm (5/16 x 2-3/8")(FW2, LW2)

42

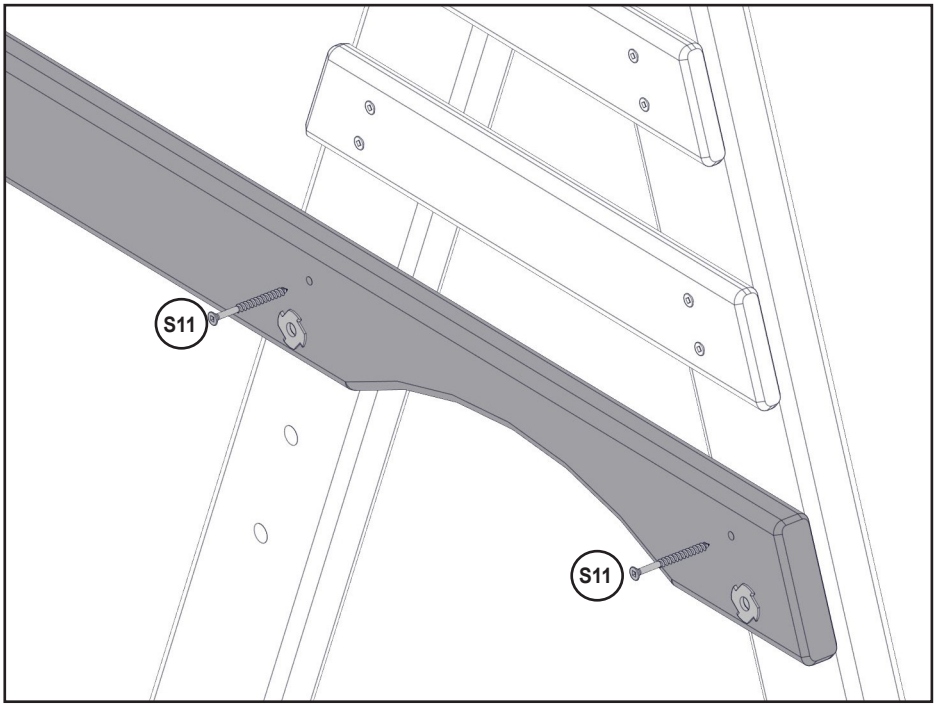

Note: Structure partly removed for clarity.

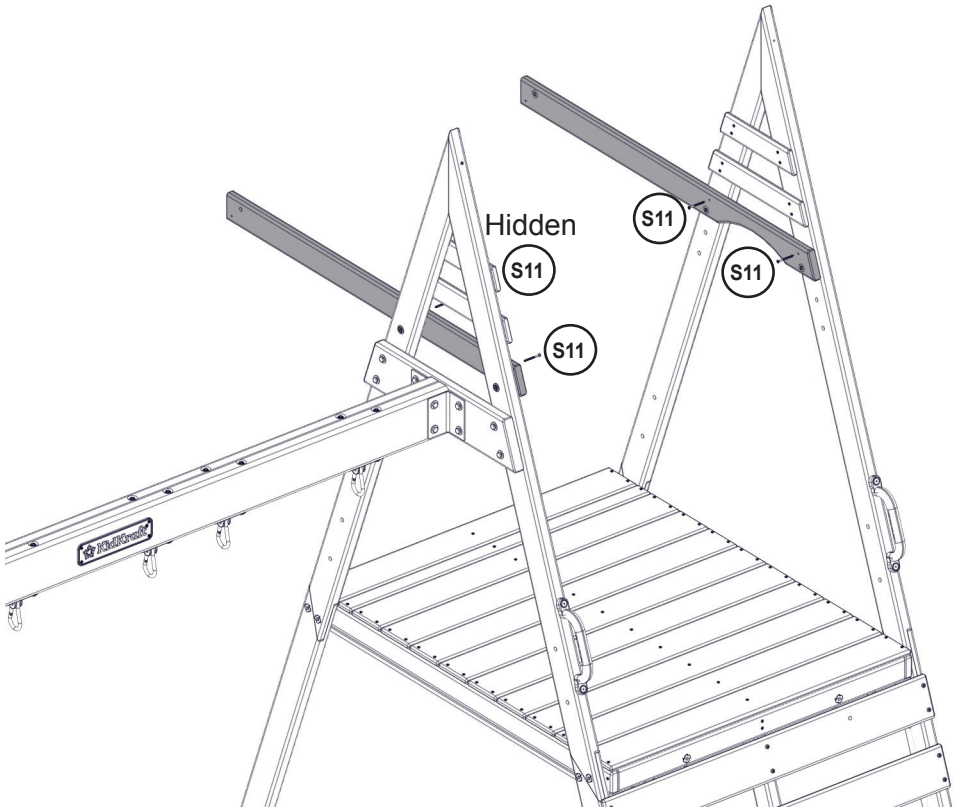

Hardware

4 x (S11) #8 x 50.8mm (#8 x 2")

europecustomerservice@kidkraft.com
+31 20 305 8620
M-F from 09:00 to 17:30 (GMT+1)

parts.kidkraft.eu

43

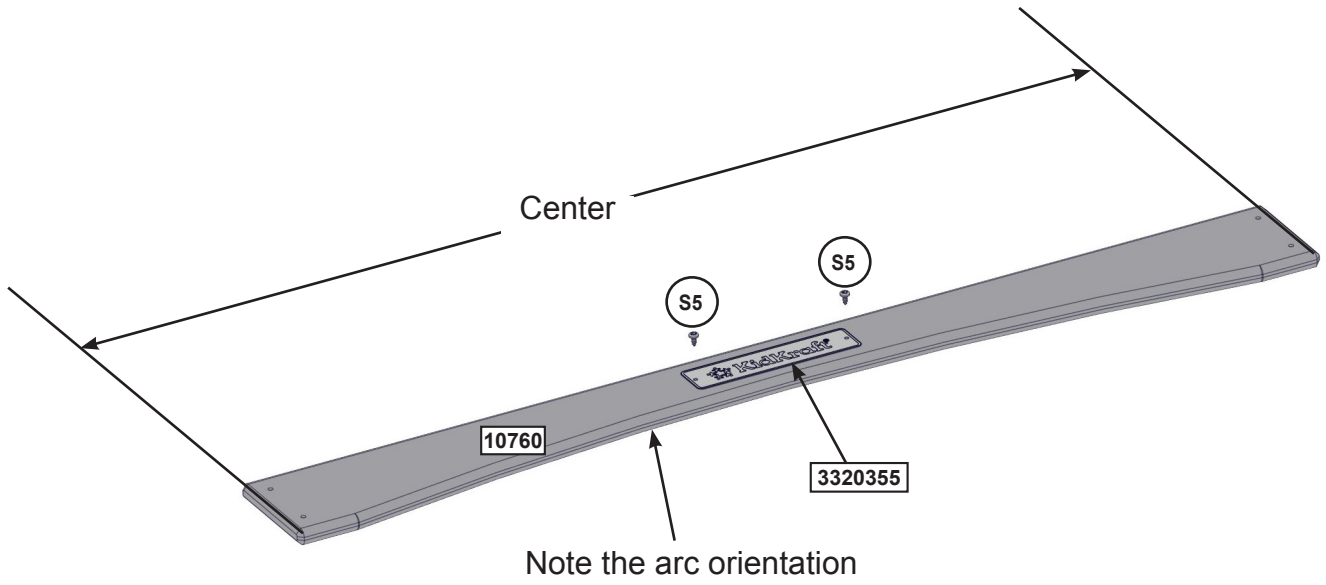

Wood Parts

1 x 10760 15.9 x 114.3 x 1035 mm (5/8" X 4 1/2" X 40 3/4")

Hardware

2 x S5 #8 x 12.7mm(#8 x 1/2")

Other Parts

1 x 3320355

44

Pre-drill holes using a 3/16” drill bit.

Note: Structure partly removed for clarity.

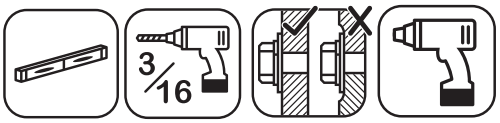

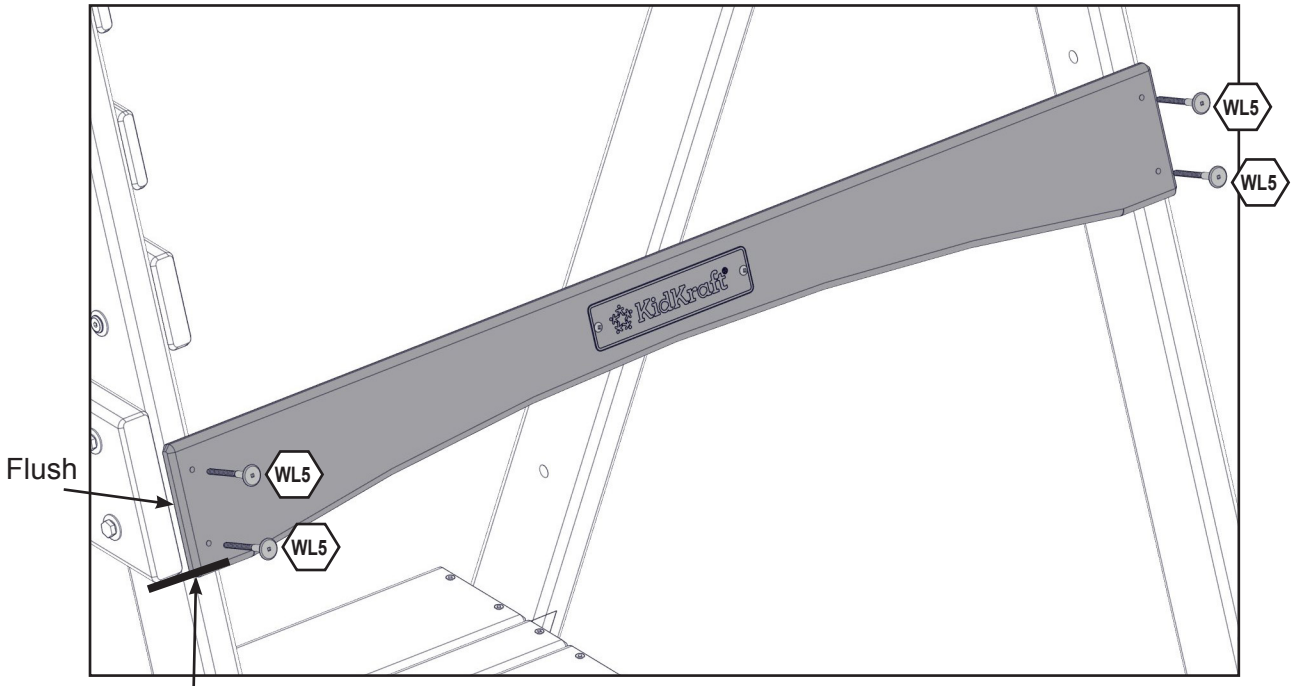

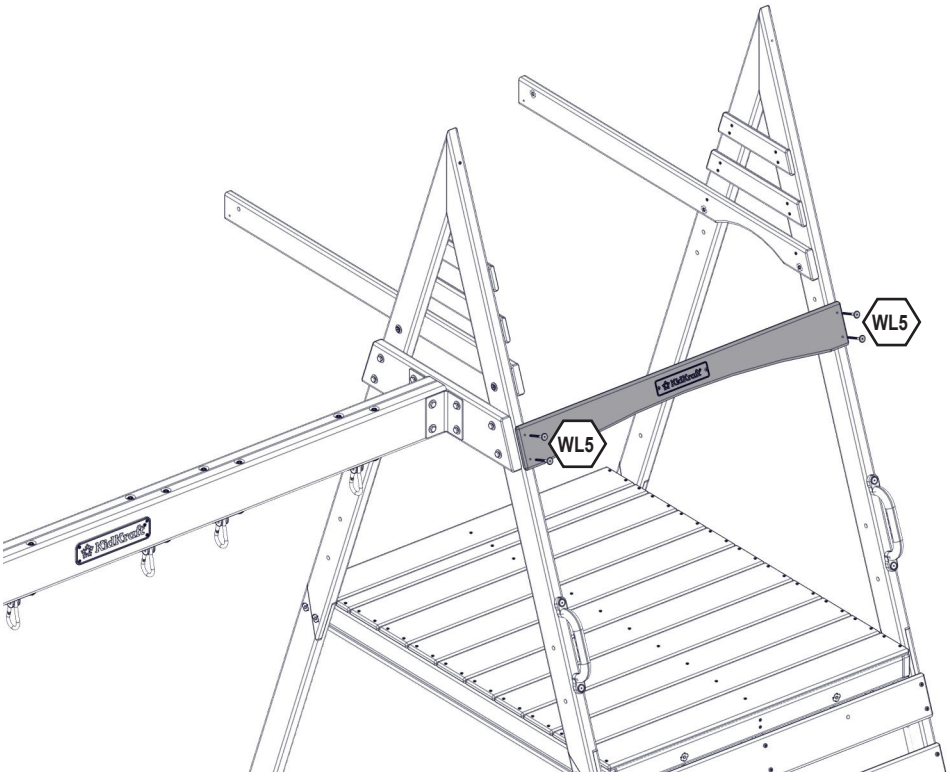

Hardware

4 x WL5 **6.4mm x 63.5 mm (1/4 x 2-1/2”)**

europecustomerservice@kidkraft.com
+31 20 305 8620
M-F from 09:00 to 17:30 (GMT+1)

parts.kidkraft.eu

45 **Note: Structure partly removed for clarity.**

Assemble T-Nuts first with hammer!

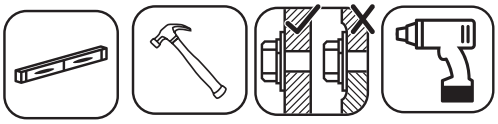

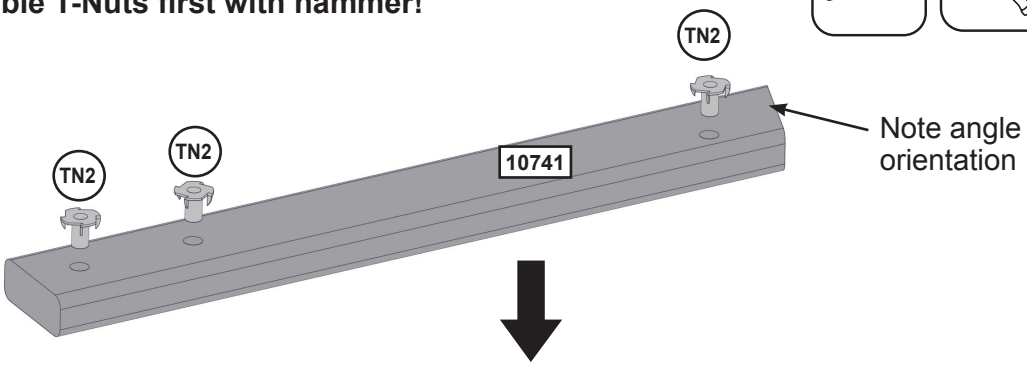

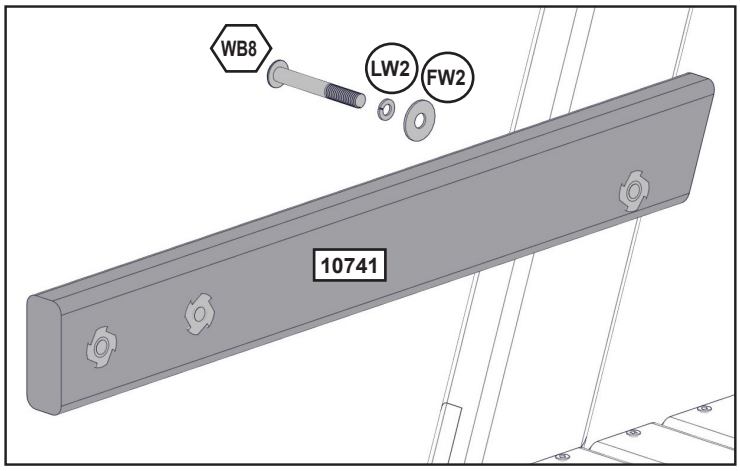

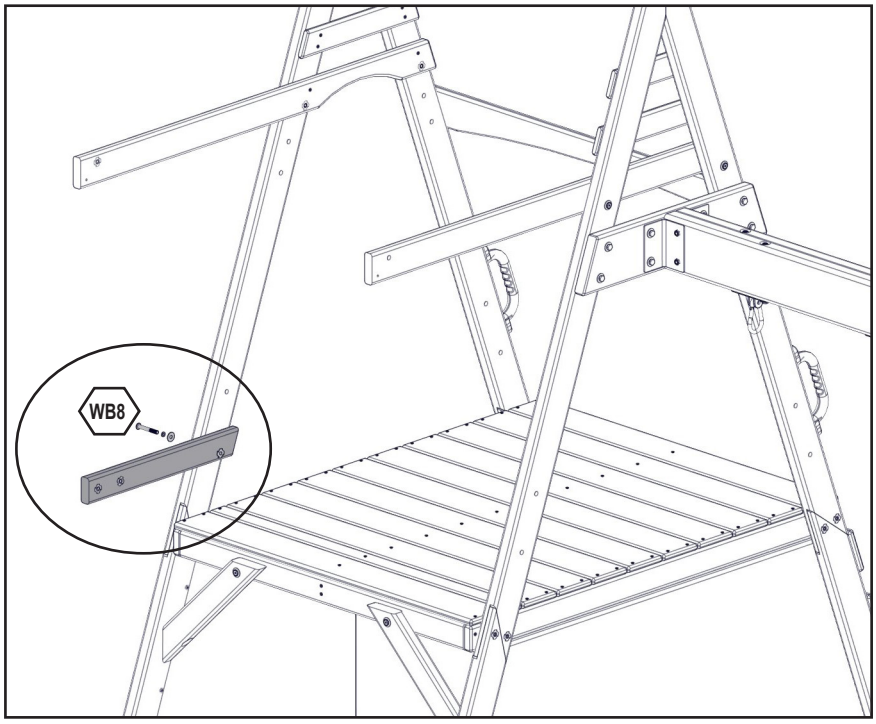

Wood Parts

1 x 10741 25.4 x 63.5 x 491.3 mm (1” X 2 1/2” X 19 5/16”)

Hardware

3 x TN2

1 x WB8 7.9mm x 60.3 mm (5/16 x 2-3/8”)(FW2, LW2)

46 **Note: Structure partly removed for clarity.**

Assemble T-Nuts first with hammer!

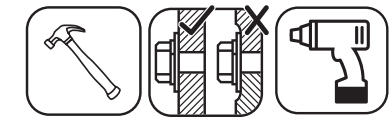

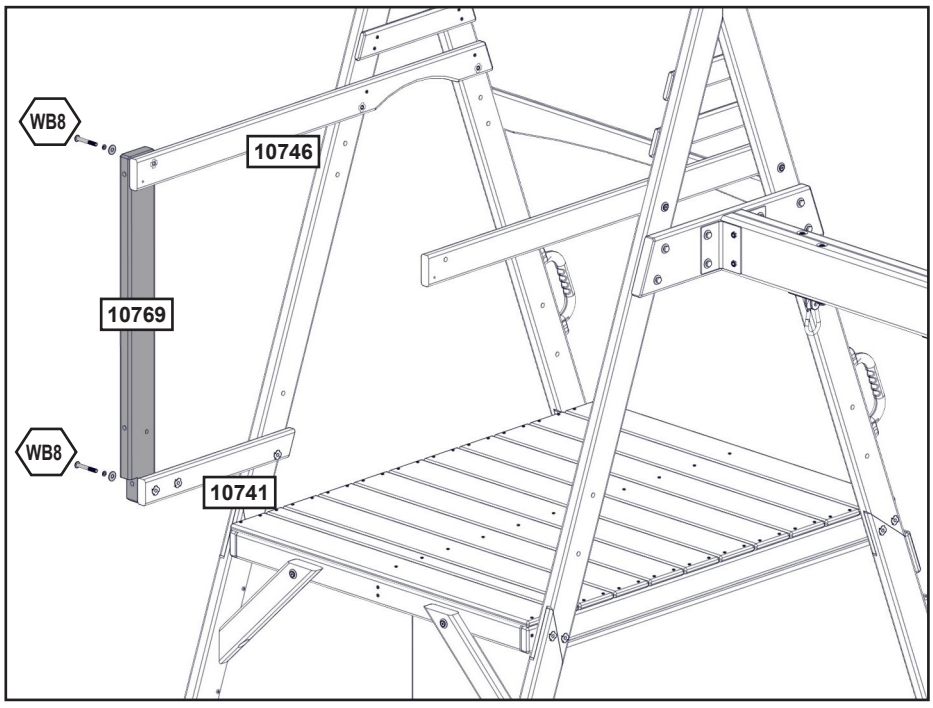

Wood Parts

1 x 10769 34.9 x 85.7 x 850.9 mm (1 3/8" X 3 3/8" X 33 1/2")

Hardware

2 x TN2

2 x WB8 7.9mm x 60.3 mm (5/16 x 2-3/8")(FW2, LW2)

europecustomerservice@kidkraft.com
+31 20 305 8620
M-F from 09:00 to 17:30 (GMT+1)

parts.kidkraft.eu

47 **Note: Structure partly removed for clarity.**

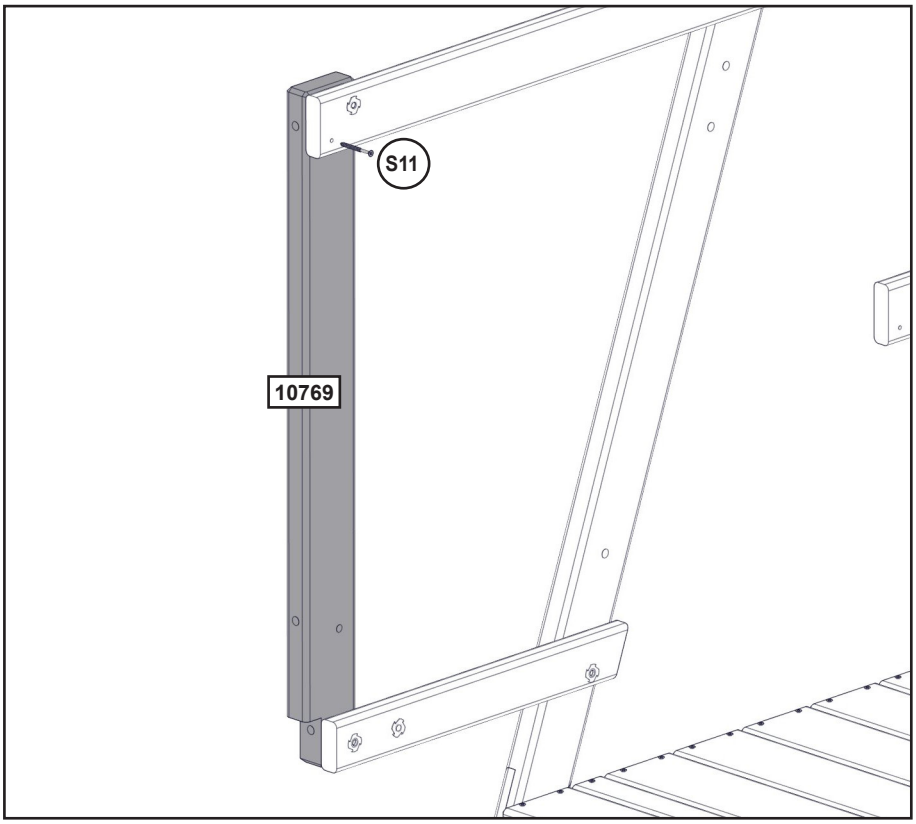

Hardware

1 x (S11) #8 x 50.8mm (#8 x 2")

48

Note: Structure partly removed for clarity.

Assemble T-Nuts first with hammer!

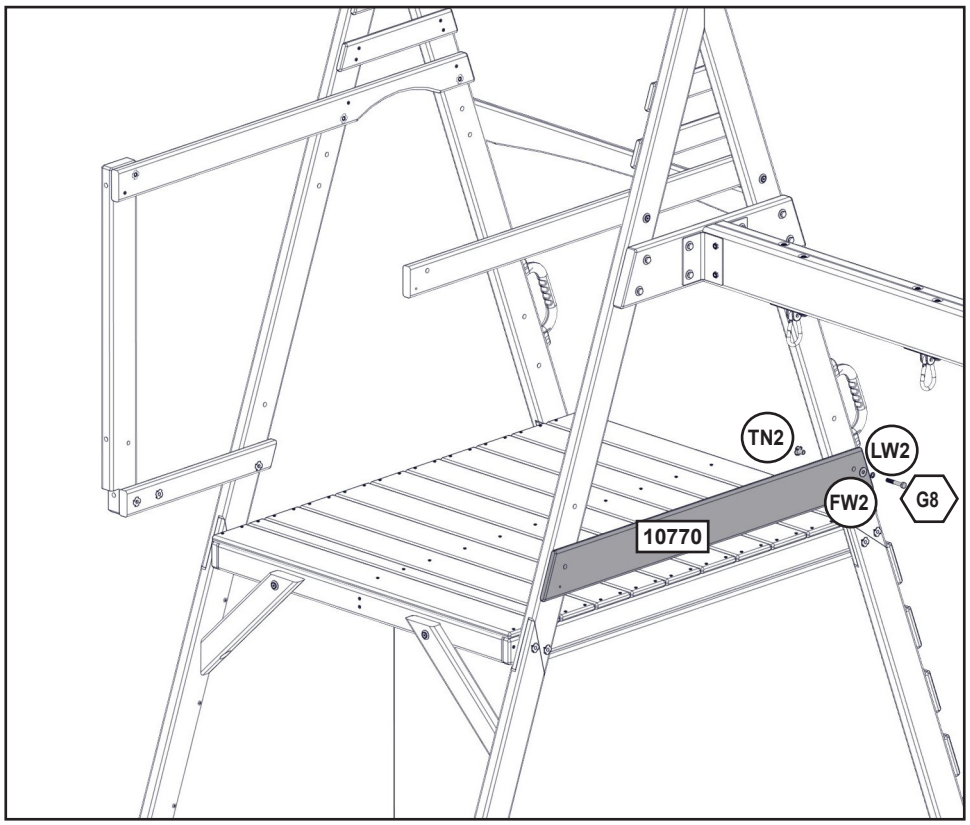

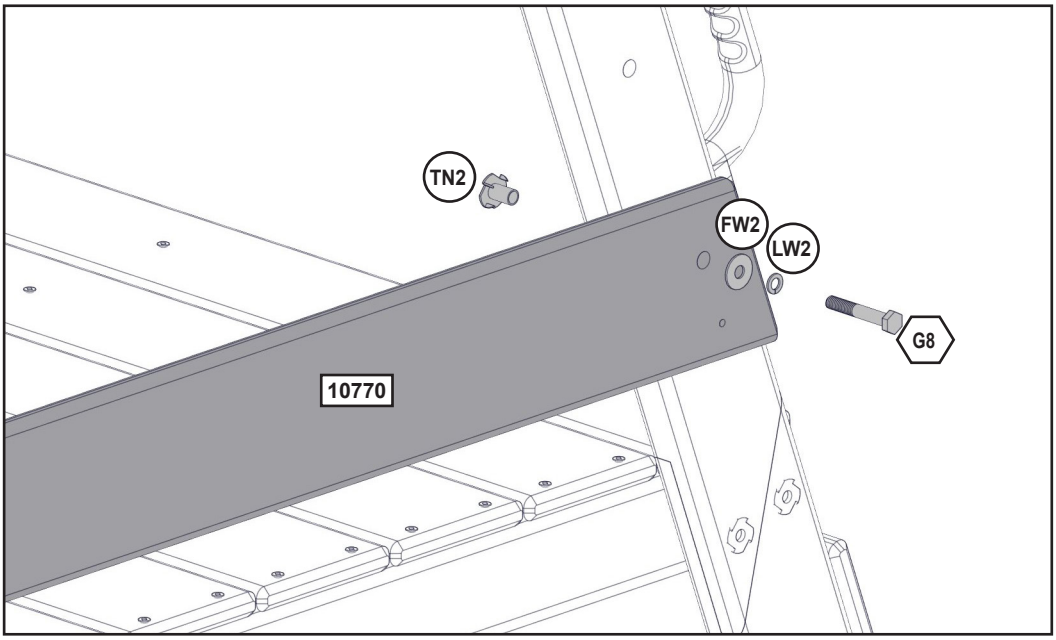

Wood Parts

1 x [10770] 15.9 x 114.3 x 1087.1 mm (5/8" x 4 1/2" x 42 13/16")

Hardware

1 x ⟨G8⟩ 7.9mm x 50.8mm (5/16" x 2")(FW2, LW2, TN2)

europecustomerservice@kidkraft.com
+31 20 305 8620
M-F from 09:00 to 17:30 (GMT+1)

parts.kidkraft.eu

49 **Note: Structure partly removed for clarity.**
Assemble T-Nuts first with hammer!



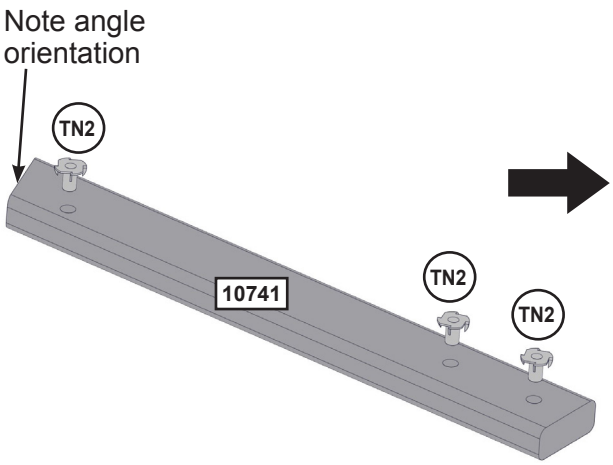

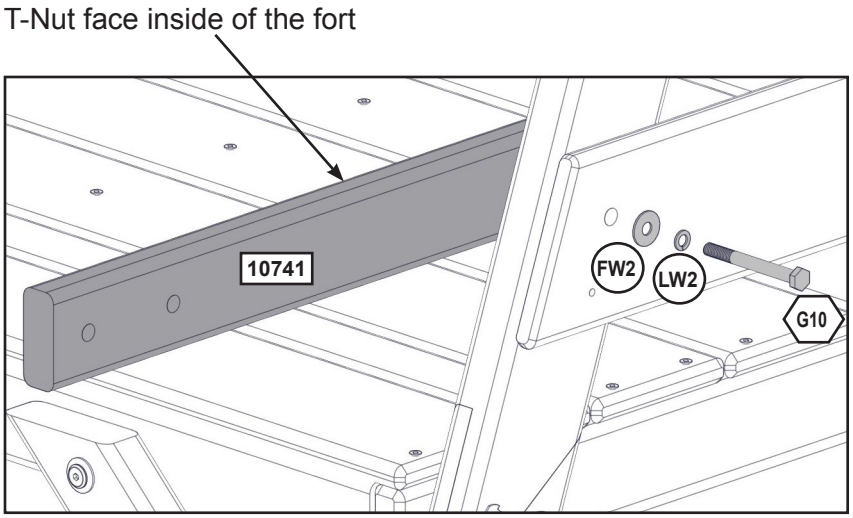

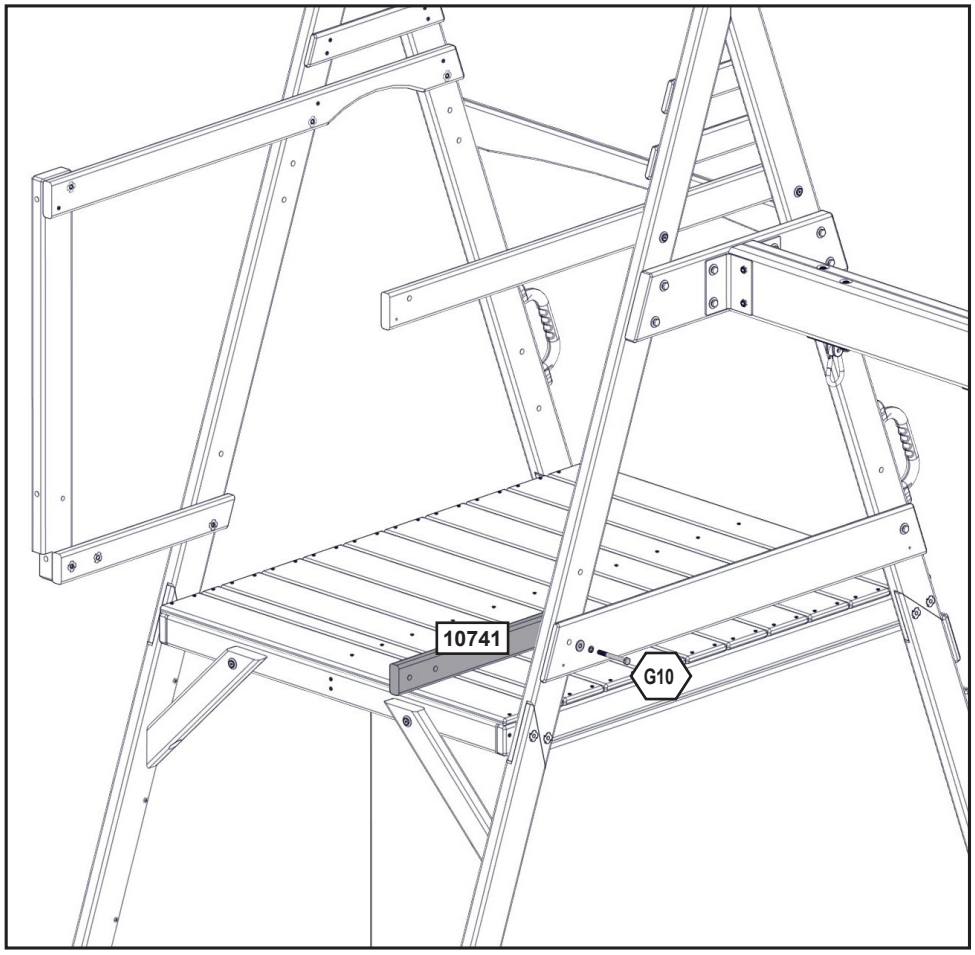

Wood Parts

1 x 10741 25.4 x 63.5 x 491.3 mm (1" X 2 1/2" X 19 5/16")

Hardware

3 x TN2

1 x G10 7.9mm x 76.2mm (5/16" x 3")(FW2, LW2)

50

Note: Structure partly removed for clarity.

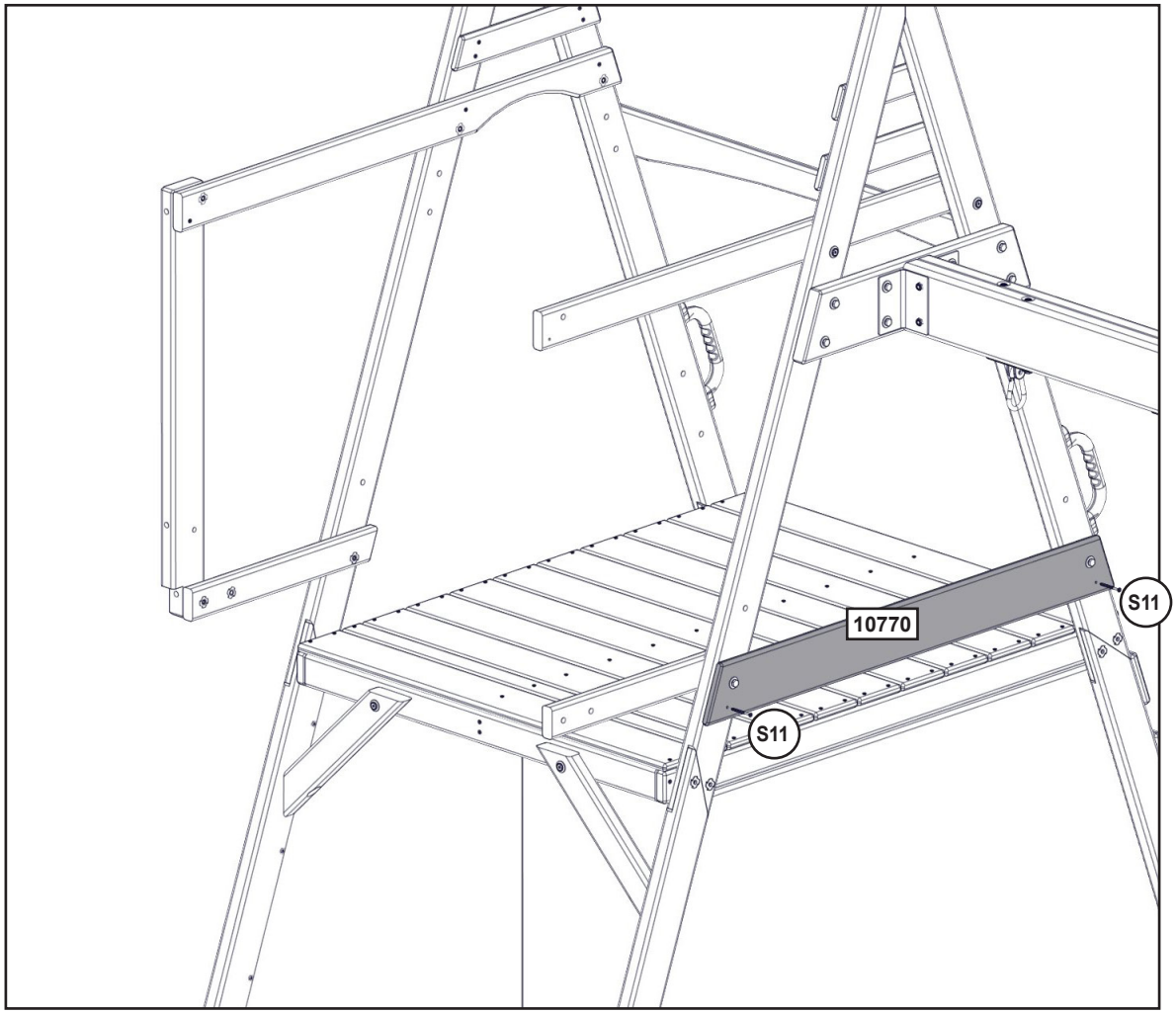

Hardware

2 x (S11) #8 x 50.8mm (#8 x 2")

europecustomerservice@kidkraft.com
+31 20 305 8620
M-F from 09:00 to 17:30 (GMT+1)

parts.kidkraft.eu

51 **Note: Structure partly removed for clarity.**

Assemble T-Nuts first with hammer!

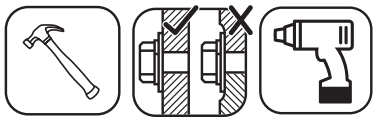

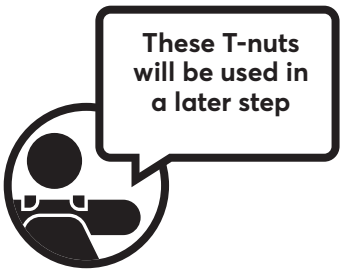

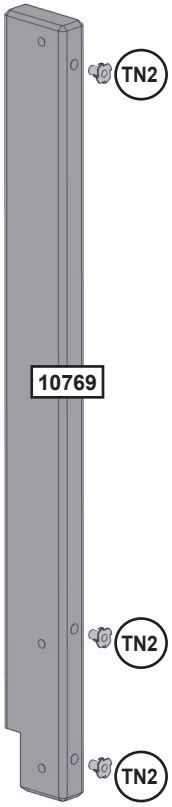

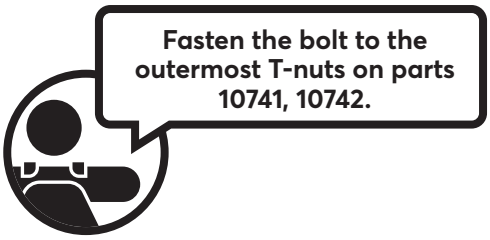

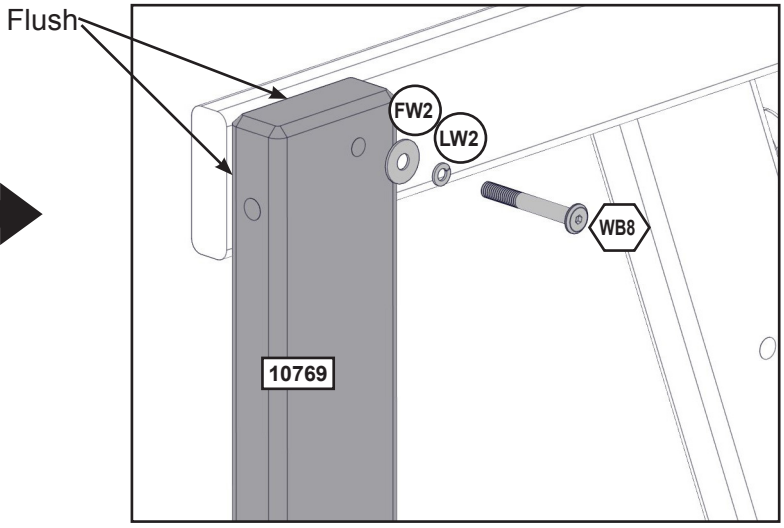

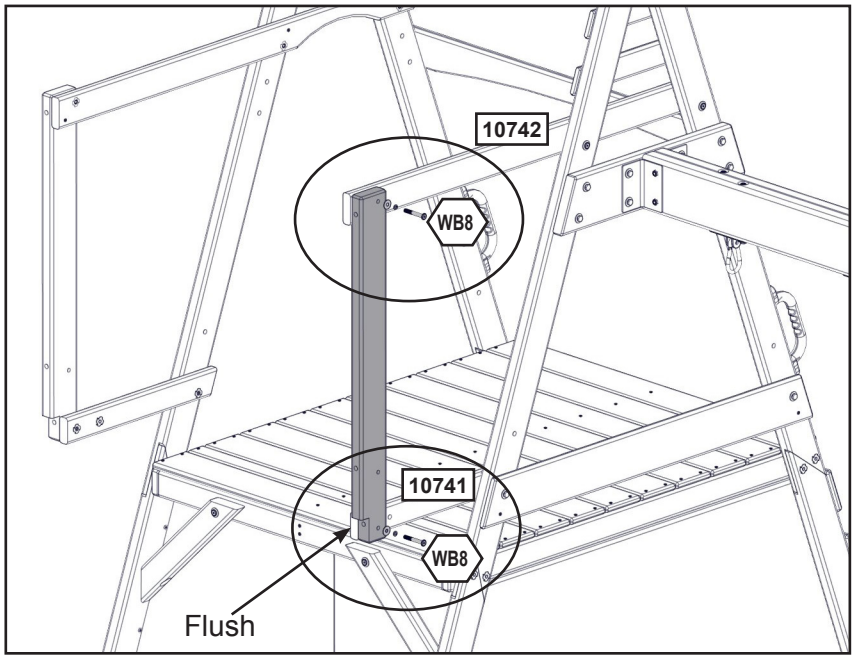

Wood Parts

1 x 10769 34.9 x 85.7 x 850.9 mm (1 3/8" X 3 3/8" X 33 1/2")

Hardware

3 x TN2

2 x WB8 7.9mm x 60.3 mm (5/16 x 2-3/8")(FW2, LW2)

52

Note: Structure partly removed for clarity.

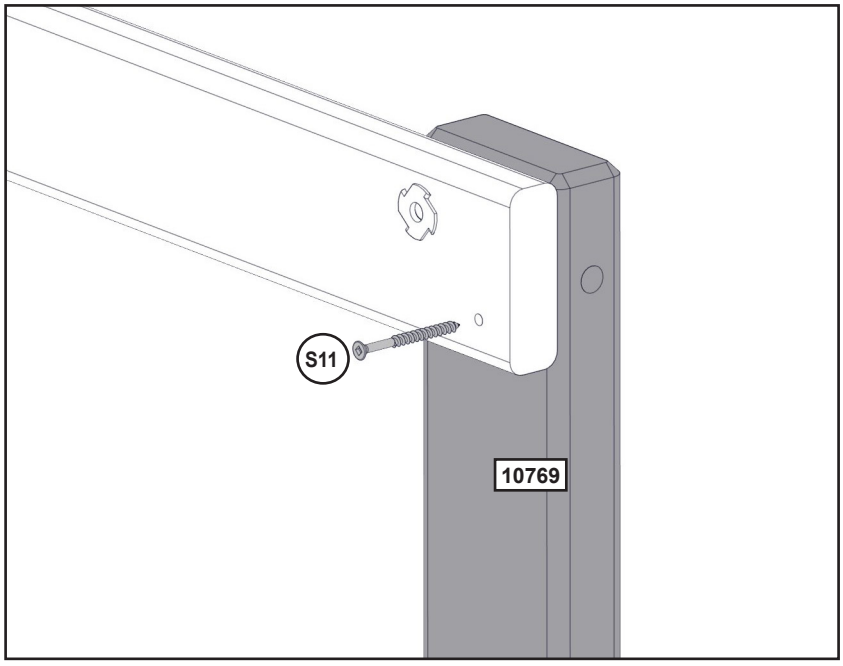

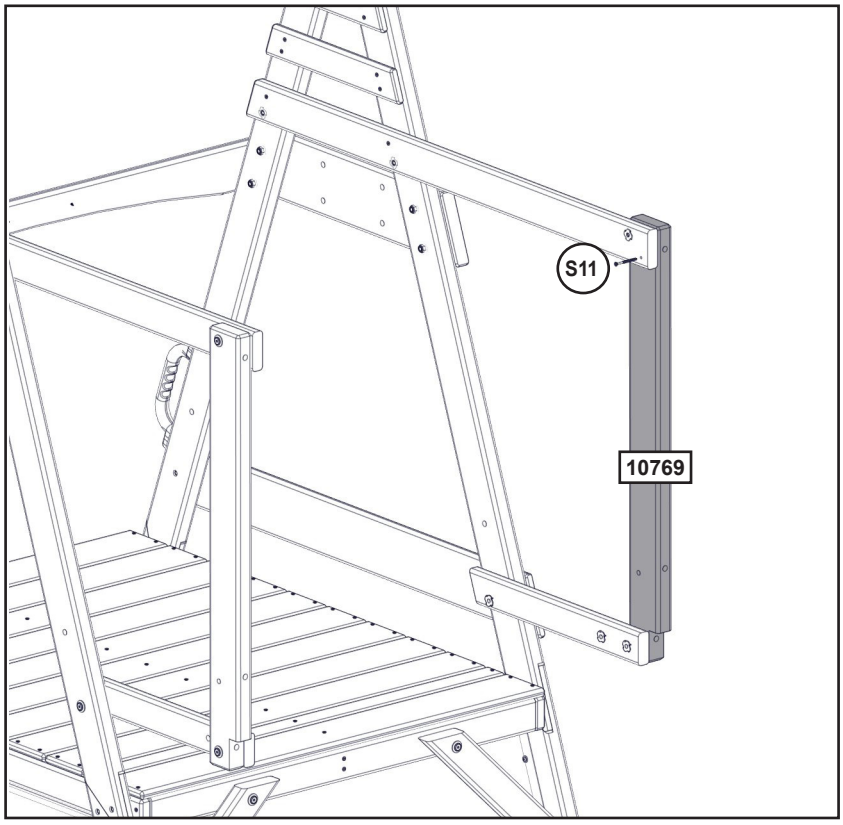

Hardware

1 x (S11) #8 x 50.8mm (#8 x 2")

europecustomerservice@kidkraft.com
+31 20 305 8620
M-F from 09:00 to 17:30 (GMT+1)

parts.kidkraft.eu

53 **Note: Structure partly removed for clarity.**

Assemble T-Nuts first with hammer!

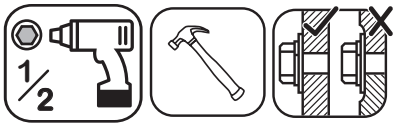

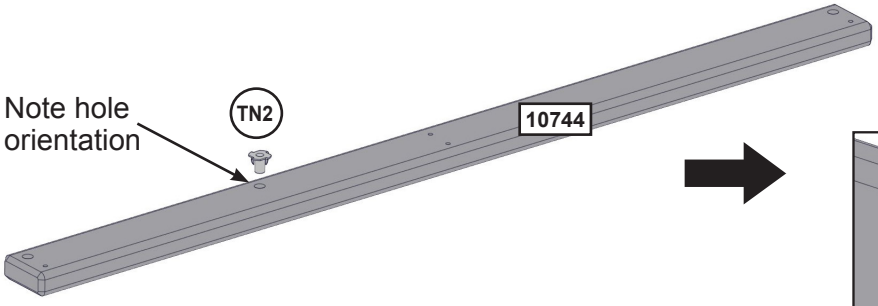

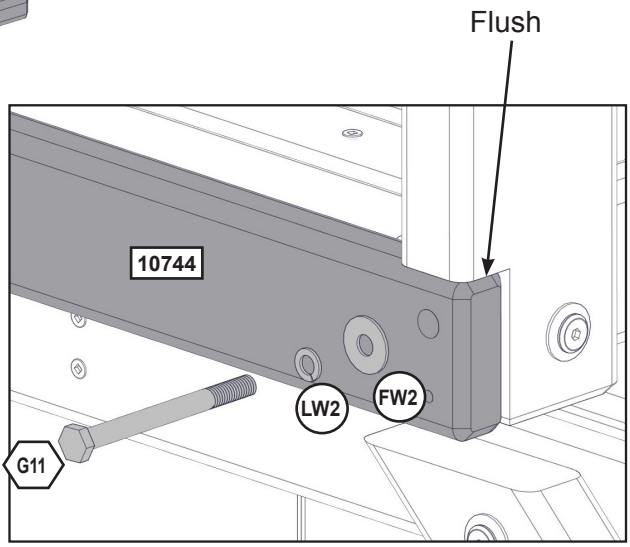

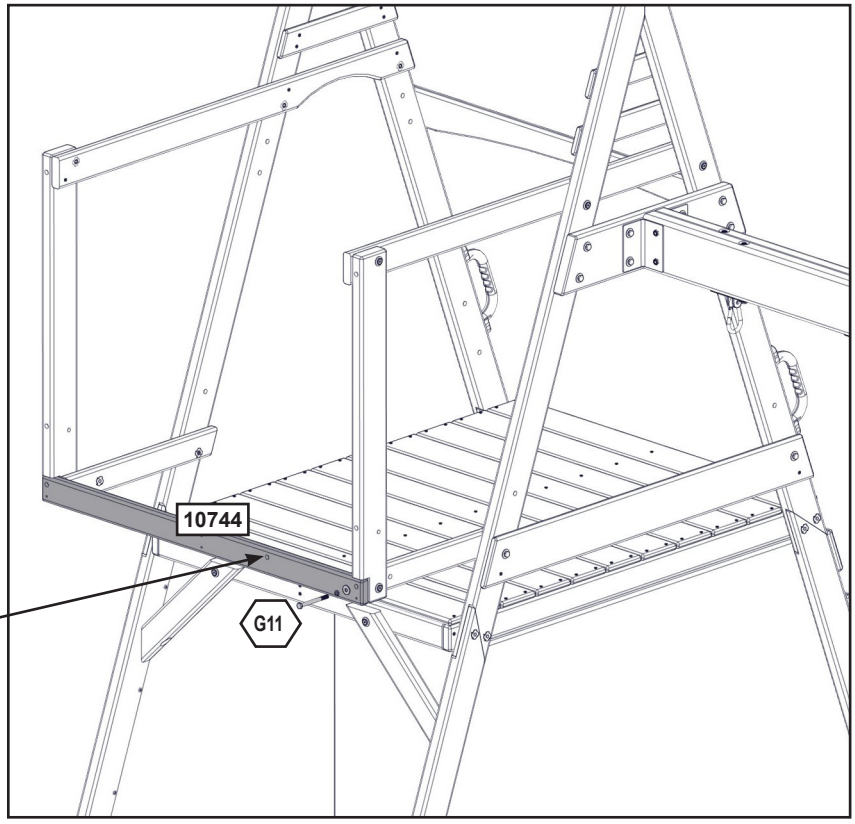

Wood Parts

1 x 10744 25.4 x 63.5 x 1035 mm (1" X 2 1/2" X 40 3/4")

Hardware

1 x TN2

1 x G11 7.9mm x 88.9 mm (5/16 x 3-1/2") (FW2, LW2)

54

Note: Structure partly removed for clarity.

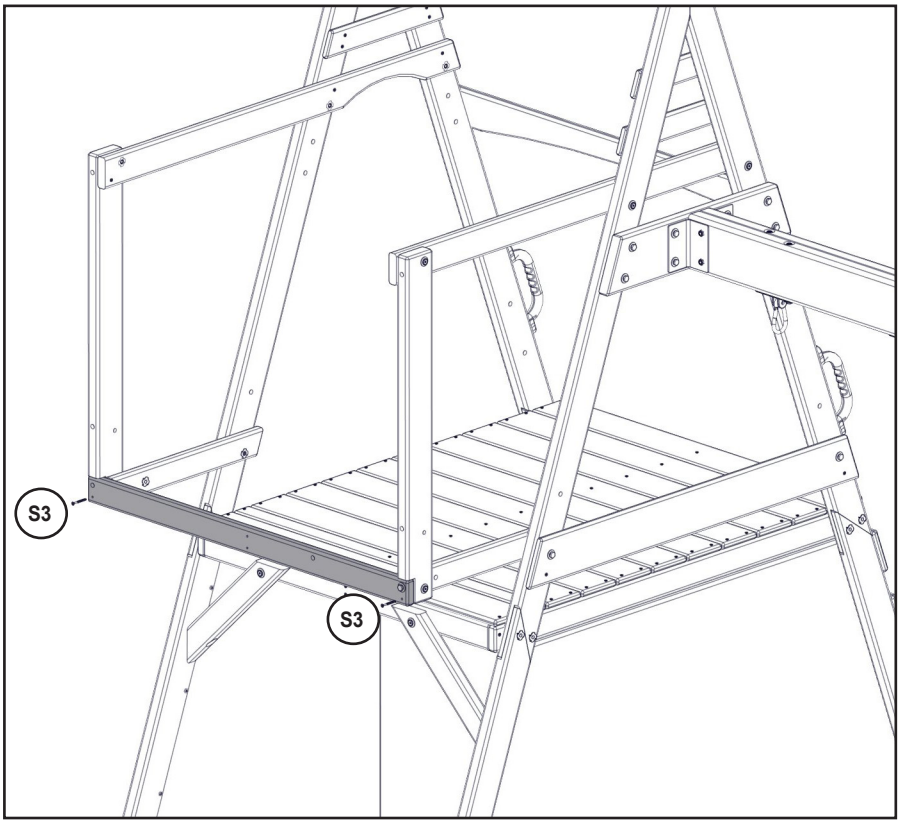

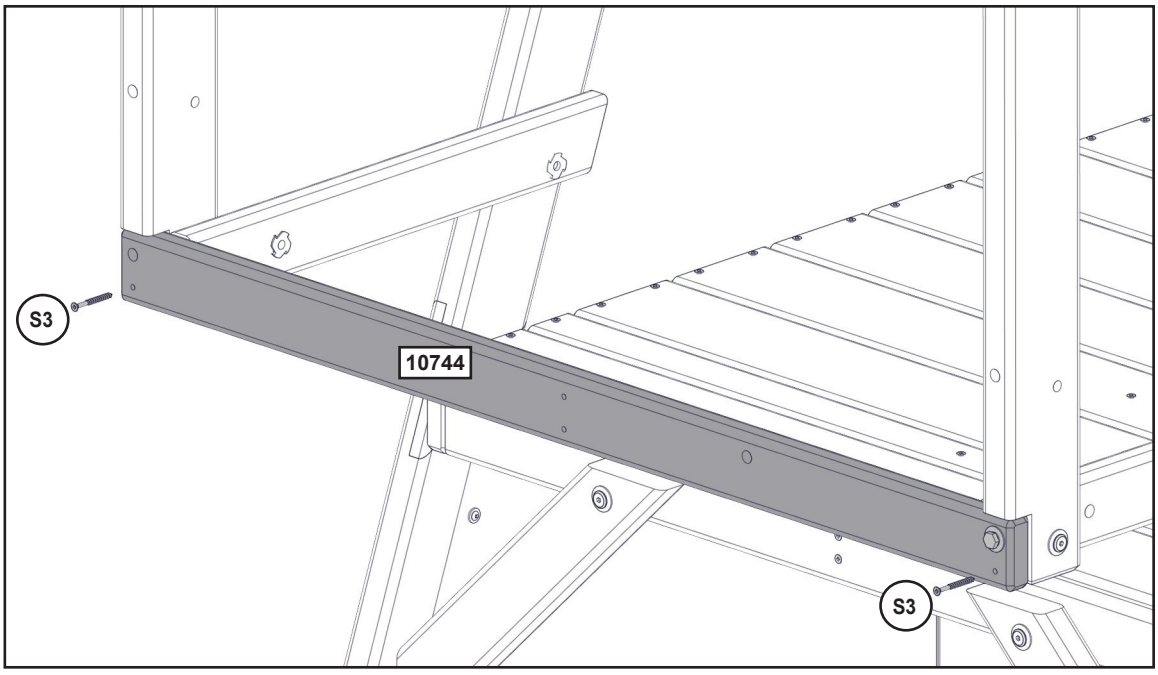

Hardware

2 x (S3) #8 x 63.5mm (#8 x 2-1/2")

europecustomerservice@kidkraft.com
+31 20 305 8620
M-F from 09:00 to 17:30 (GMT+1)

parts.kidkraft.eu

55 **Note: Structure partly removed for clarity.**

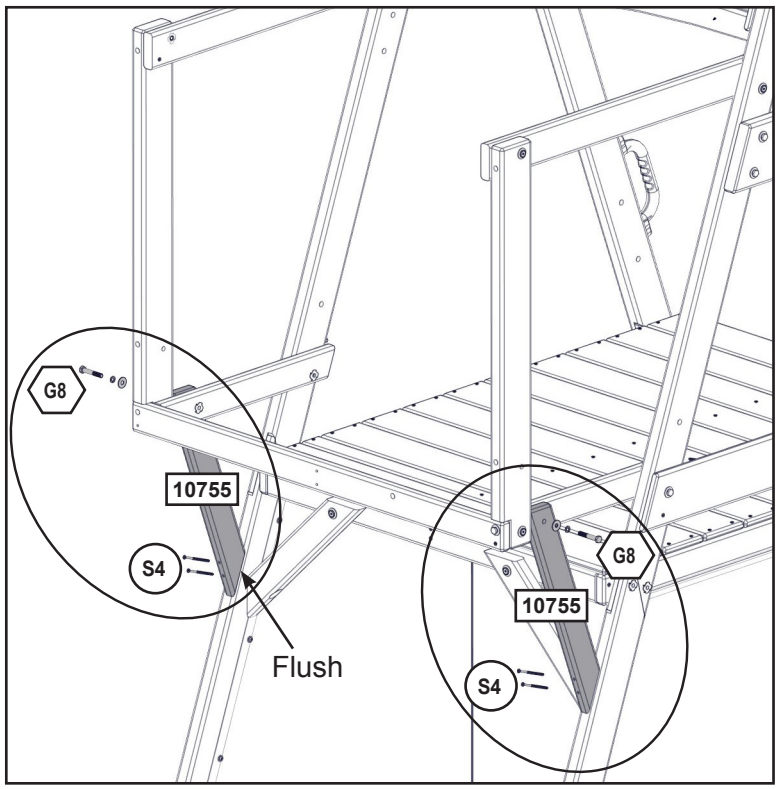

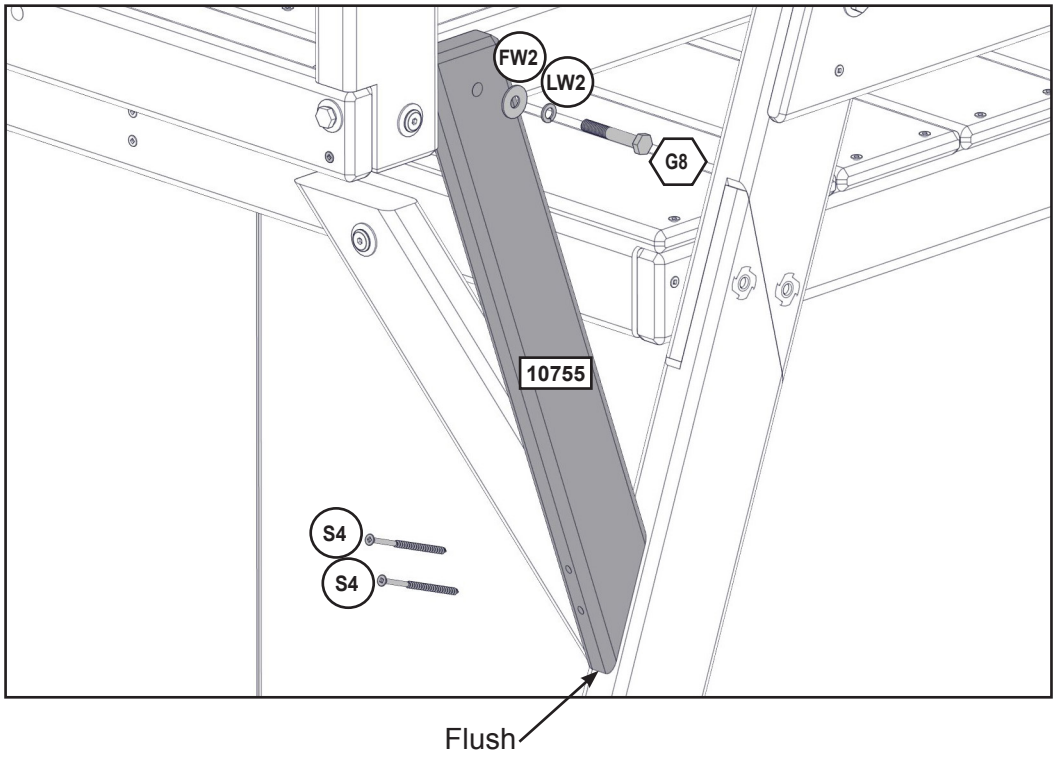

Wood Parts

2 x 10755 25.4 x 63.5 x 500 mm (1" X 2 1/2" X 19 11/16")

Hardware

2 x G8 7.9mm x 50.8mm (5/16" x 2")(FW2, LW2)

4 x S4 #8 x 76.2mm (#8 x 3")

56 **Note: Structure partly removed for clarity.**

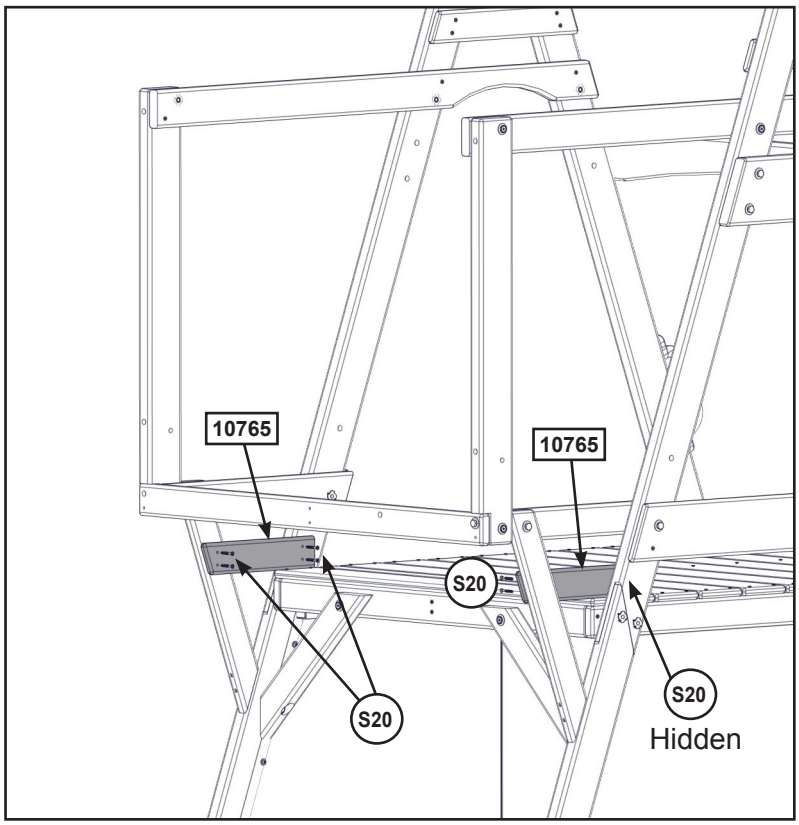

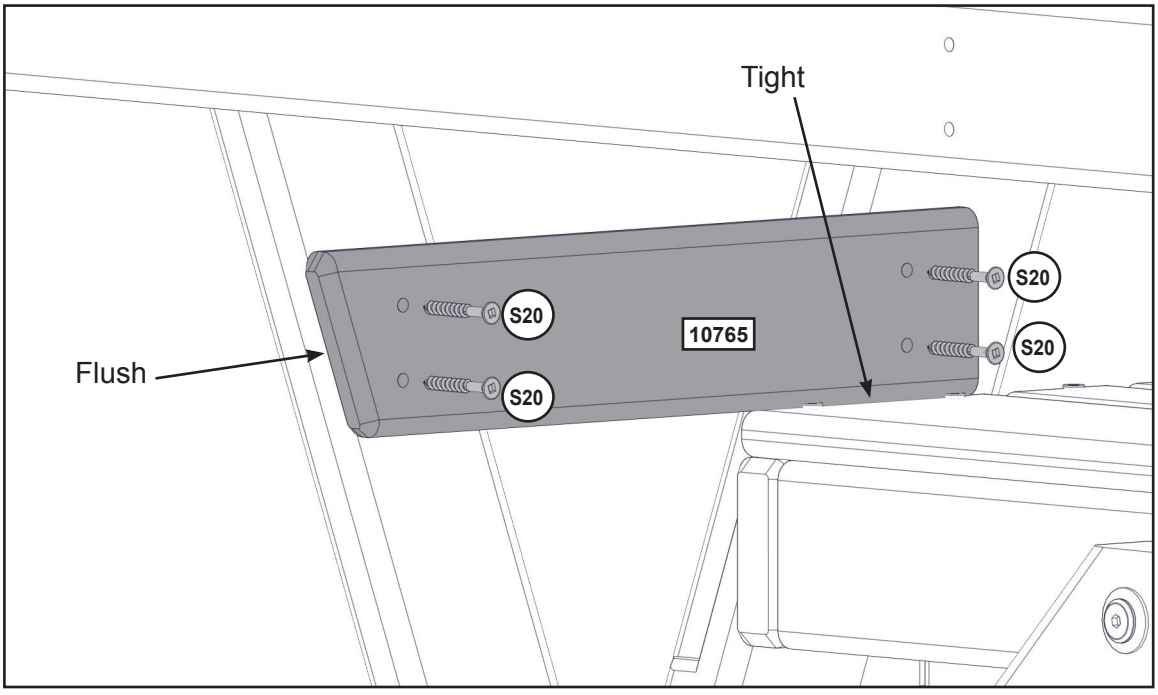

Wood Parts

2 x 10765 15.9 x 63.5 x 293 mm (5/8" X 2 1/2" X 11 9/16")

Hardware

8 x S20 #8 x 34.9mm (#8 x 1-3/8")

europecustomerservice@kidkraft.com
+31 20 305 8620
M-F from 09:00 to 17:30 (GMT+1)

parts.kidkraft.eu

57 **Note: Structure partly removed for clarity.**
Evenly space the boards

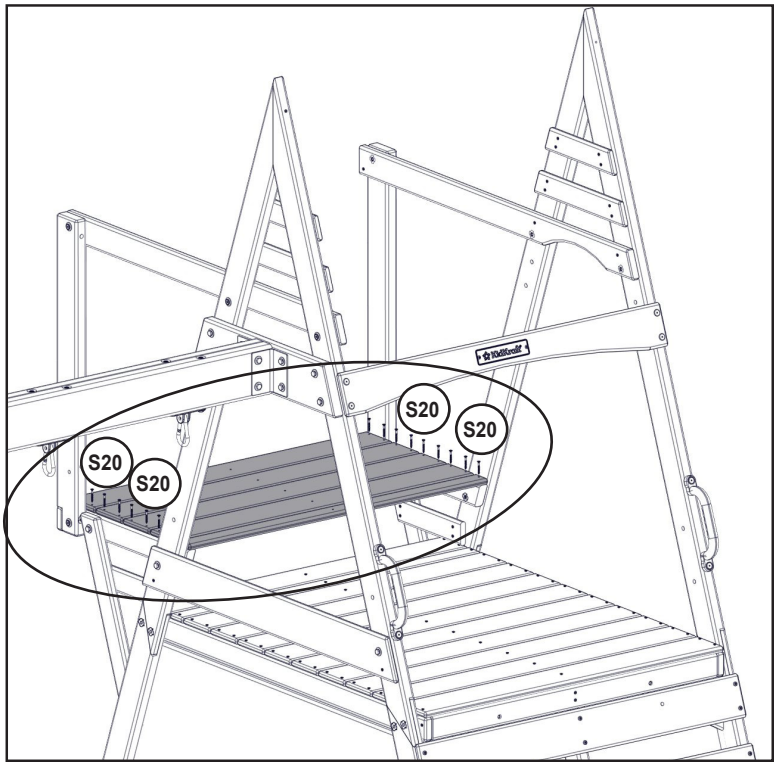

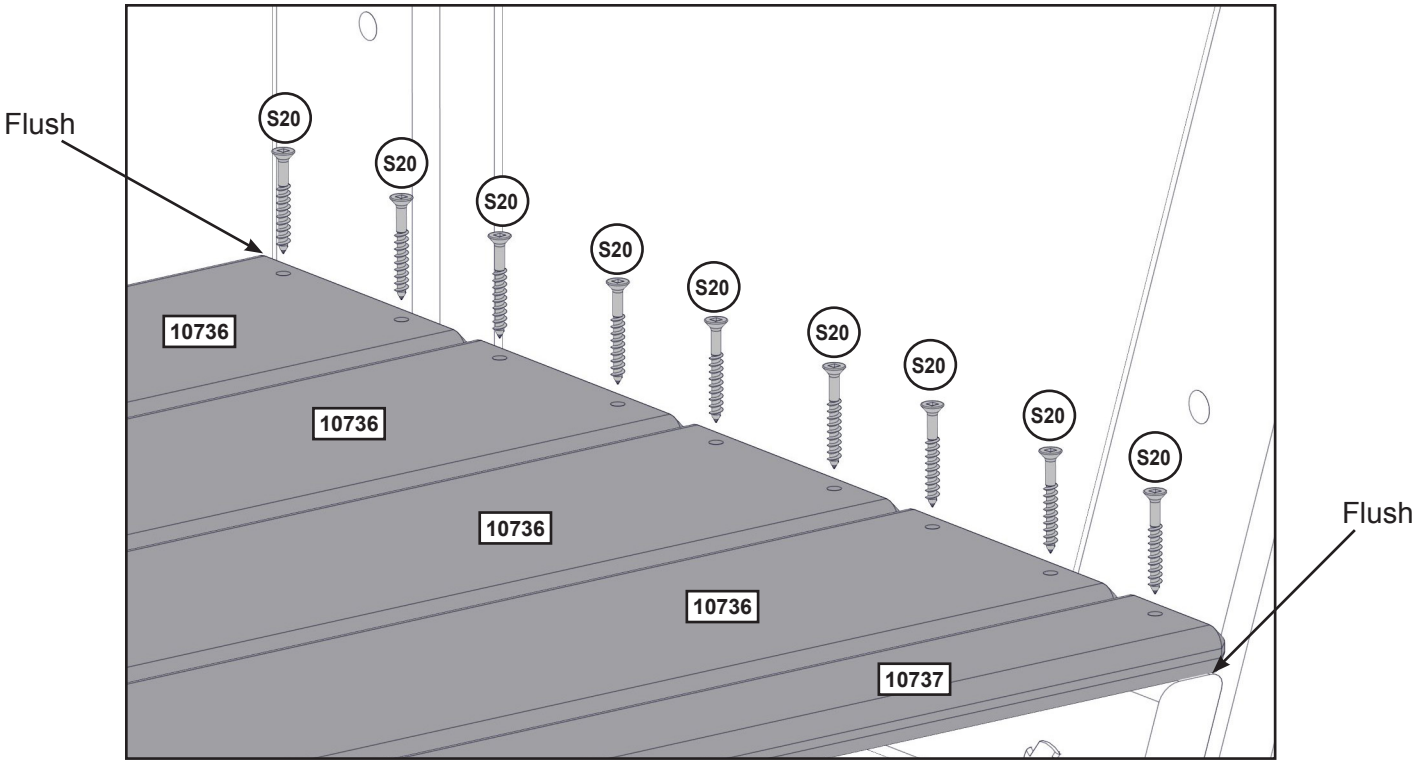

Wood Parts

4 x 10736 15.9 x 114.3 x 963 mm (5/8" X 4 1/2" X 37 15/16")
1 x 10737 15.9 x 53.5 x 963 mm (5/8" X 2 1/8" X 37 15/16")

Hardware

18 x S20 #8 x 34.9mm (#8 x 1-3/8")

58

Note: Structure partly removed for clarity.

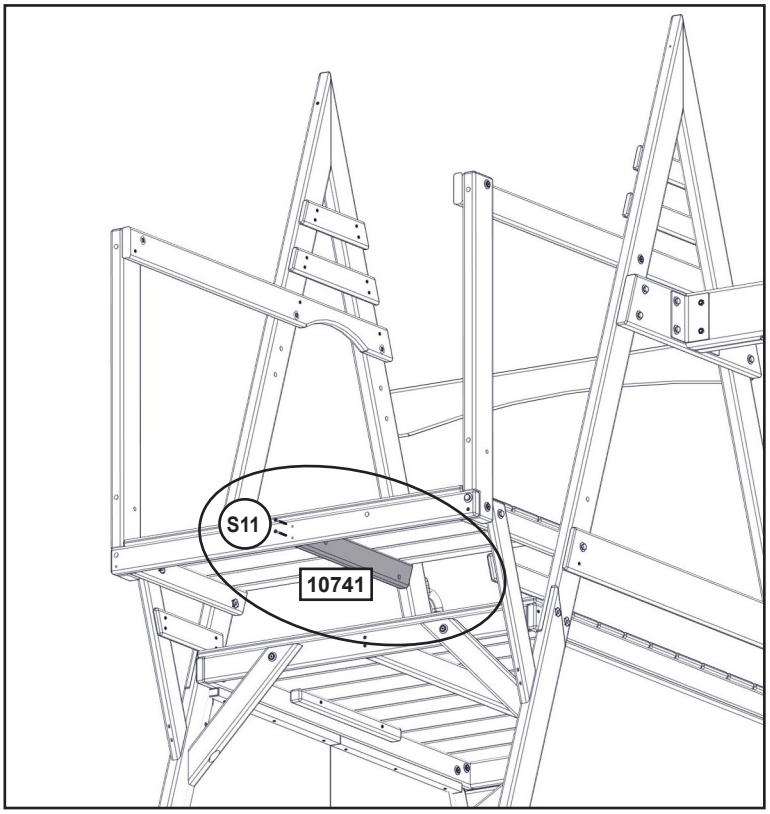

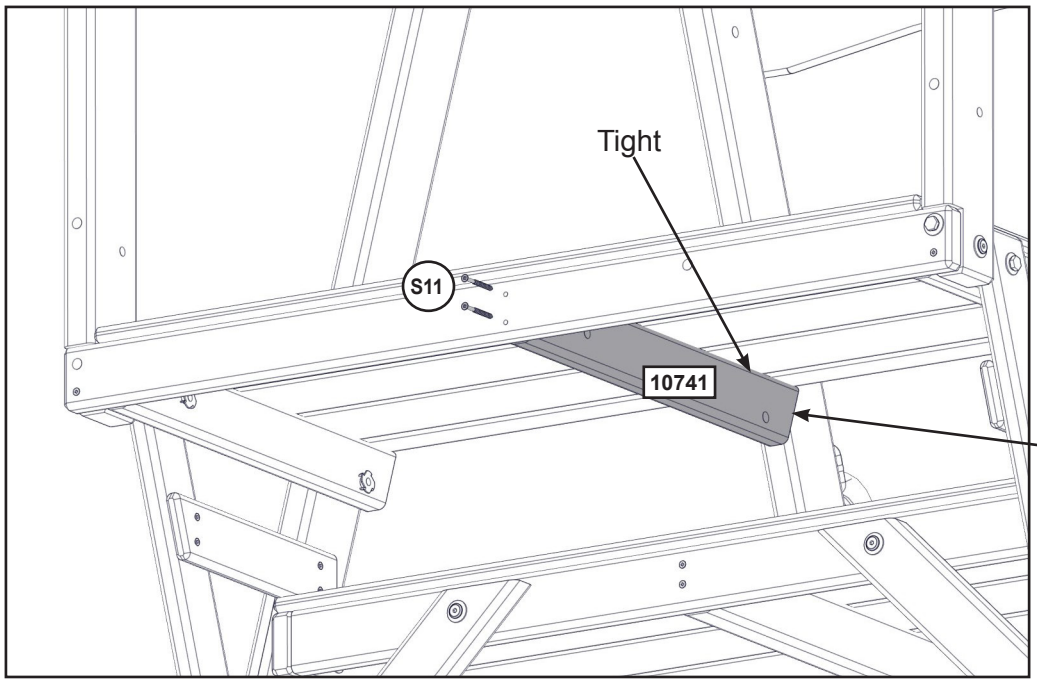

Wood Parts

1 x [10741] 25.4 x 63.5 x 491.3 mm (1" X 2 1/2" X 19 5/16")

Hardware

2 x (S11) #8 x 50.8mm (#8 x 2")

europecustomerservice@kidkraft.com
+31 20 305 8620
M-F from 09:00 to 17:30 (GMT+1)

parts.kidkraft.eu

59 **Note: Structure partly removed for clarity.**

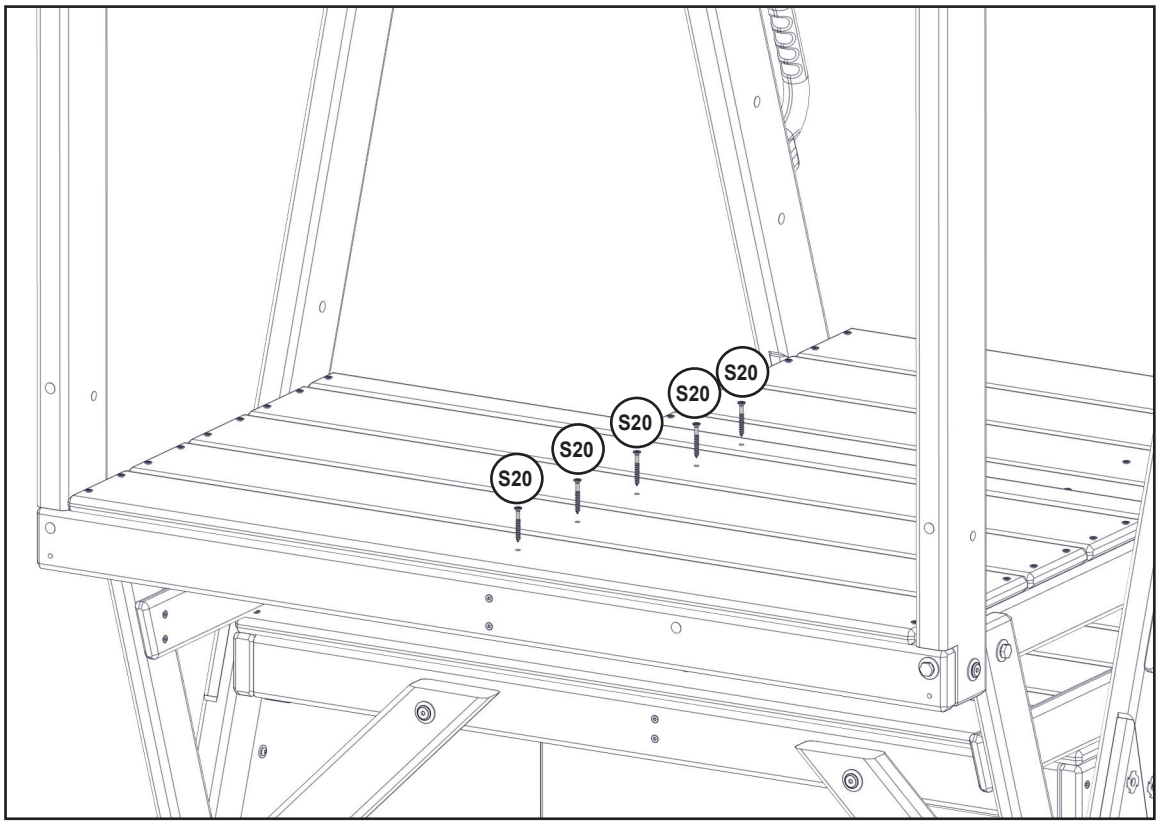

Hardware

5 x (S20) #8 x 34.9mm (#8 x 1-3/8")

60 **Note: Structure partly removed for clarity.**

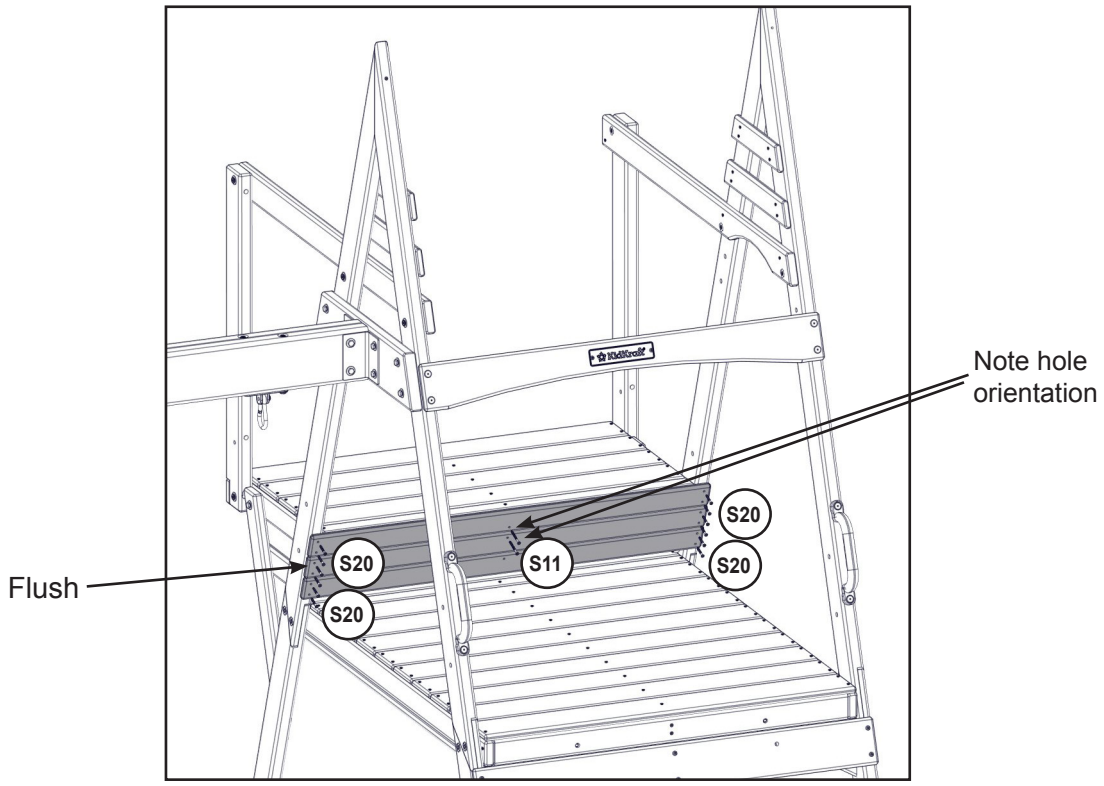

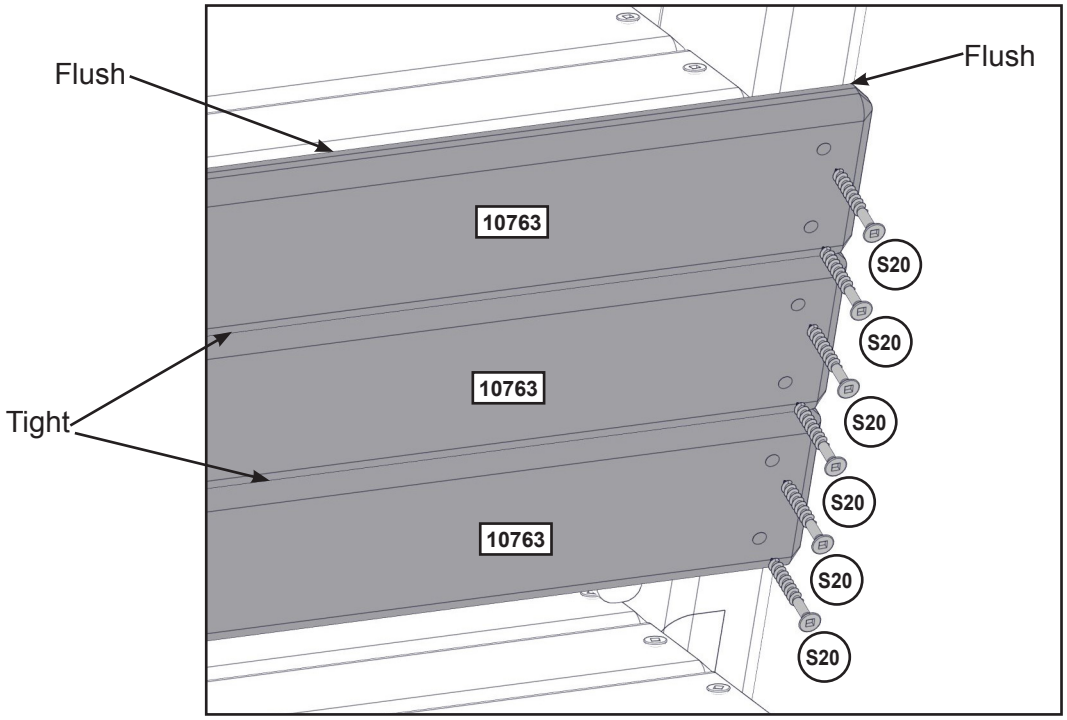

Wood Parts

3 x [10763] 15.9 x 63.5 x 1035 mm (5/8" X 2 1/2" X 40 3/4")

Hardware

12 x (S20) #8 x 34.9mm (#8 x 1-3/8")

2 x (S11) #8 x 50.8mm (#8 x 2")

europecustomerservice@kidkraft.com
+31 20 305 8620
M-F from 09:00 to 17:30 (GMT+1)

parts.kidkraft.eu

61

Note: Structure partly removed for clarity.

Assemble T-Nuts first with hammer!

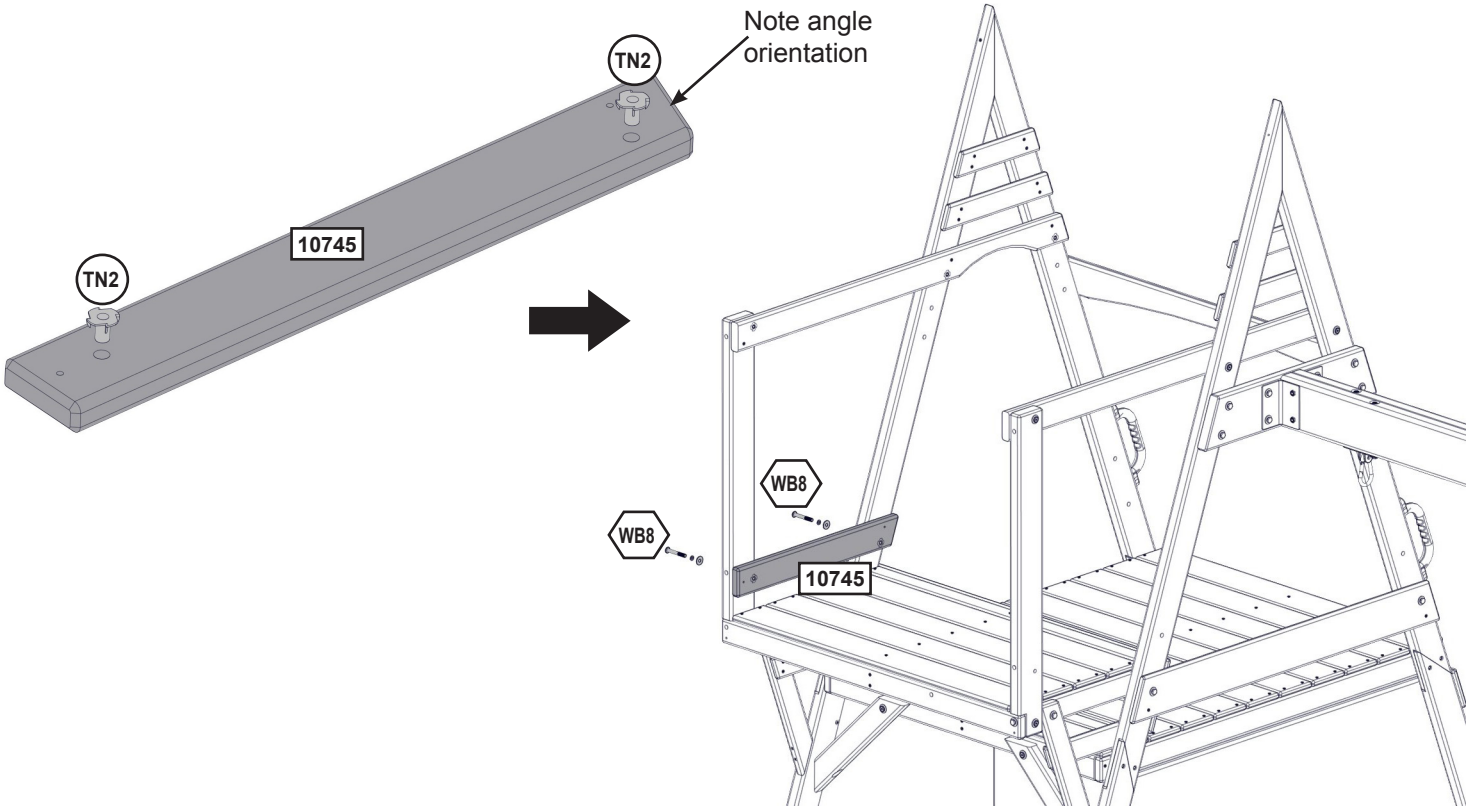

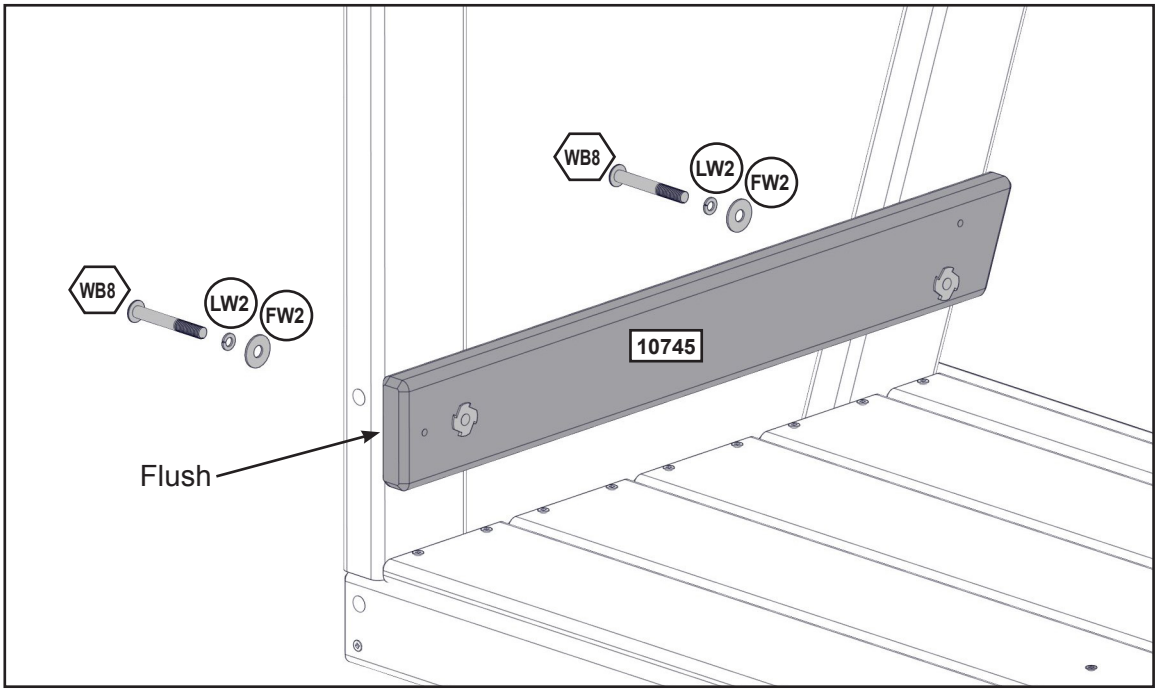

Wood Parts

1 x 10745 23.8 x 76.2 x 568.7 mm (15/16" X 3" X 22 5/16")

Hardware

2 x TN2

2 x WB8 7.9mm x 60.3 mm (5/16 x 2-3/8")(FW2, LW2)

62 **Note: Structure partly removed for clarity.**

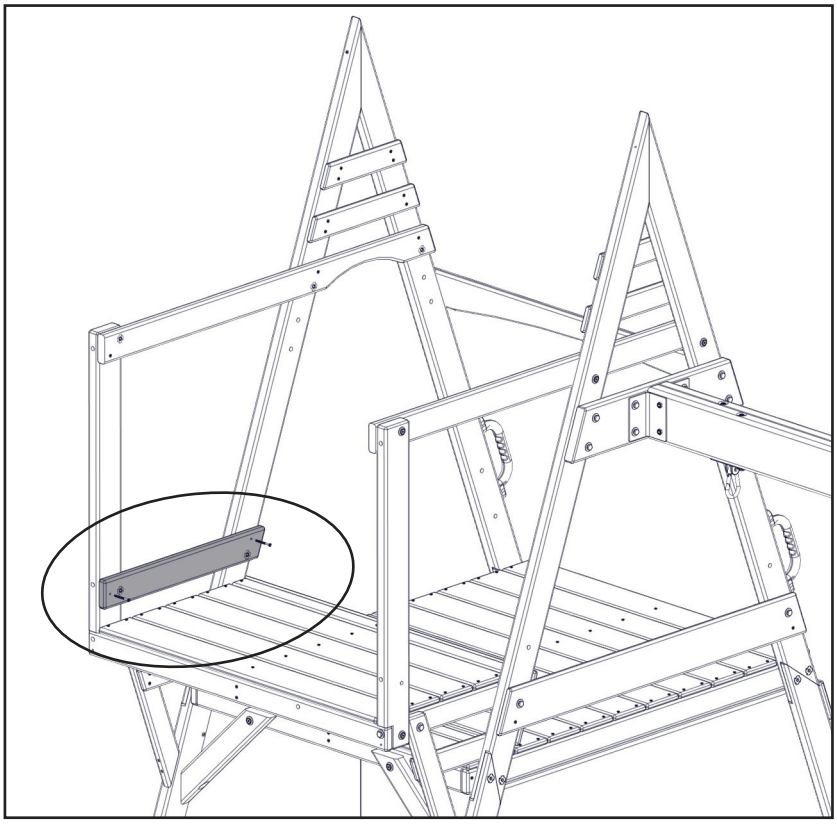

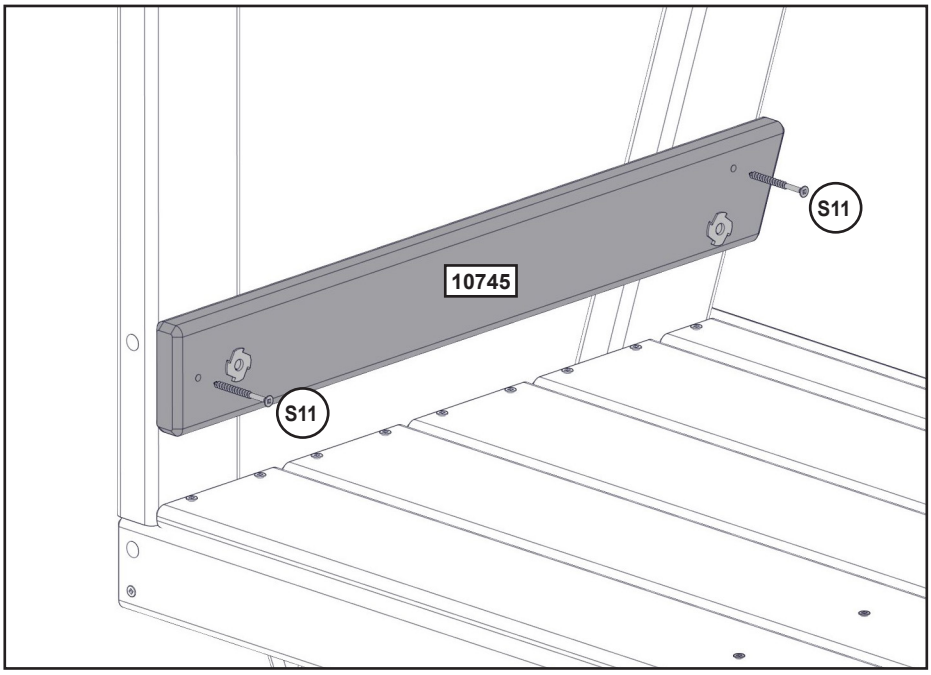

Hardware

2 x (S11) #8 x 50.8mm (#8 x 2")

europecustomerservice@kidkraft.com
+31 20 305 8620
M-F from 09:00 to 17:30 (GMT+1)

parts.kidkraft.eu

63

Note: Structure partly removed for clarity.

Assemble T-Nuts first with hammer!

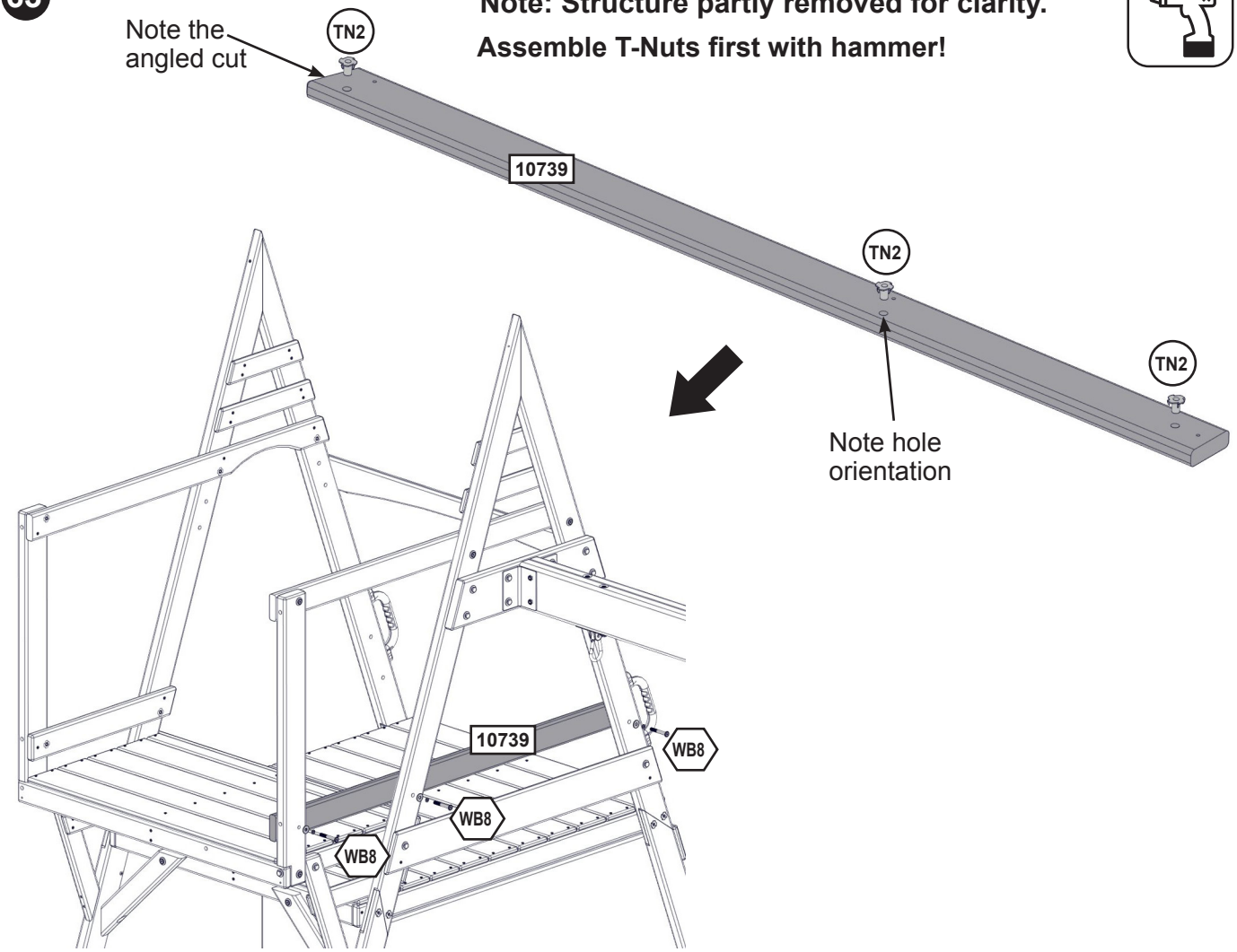

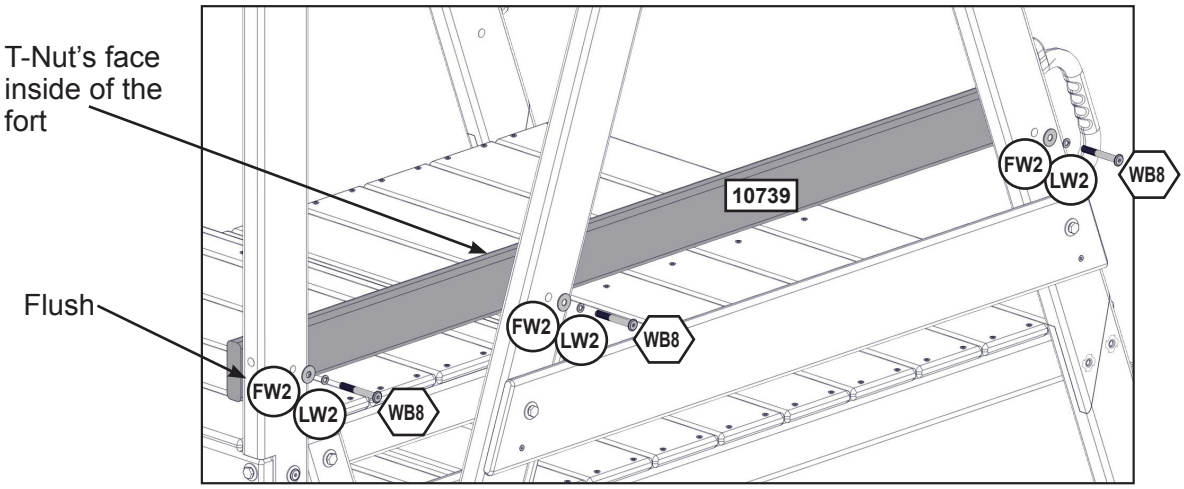

Wood Parts

1 x 10739 23.8 x 76.2 x 1404.3 mm (15/16" X 3" X 55 5/16")

Hardware

3 x TN2

3 x WB8 7.9mm x 60.3 mm (5/16 x 2-3/8")(FW2, LW2)

64 **Note: Structure partly removed for clarity.**

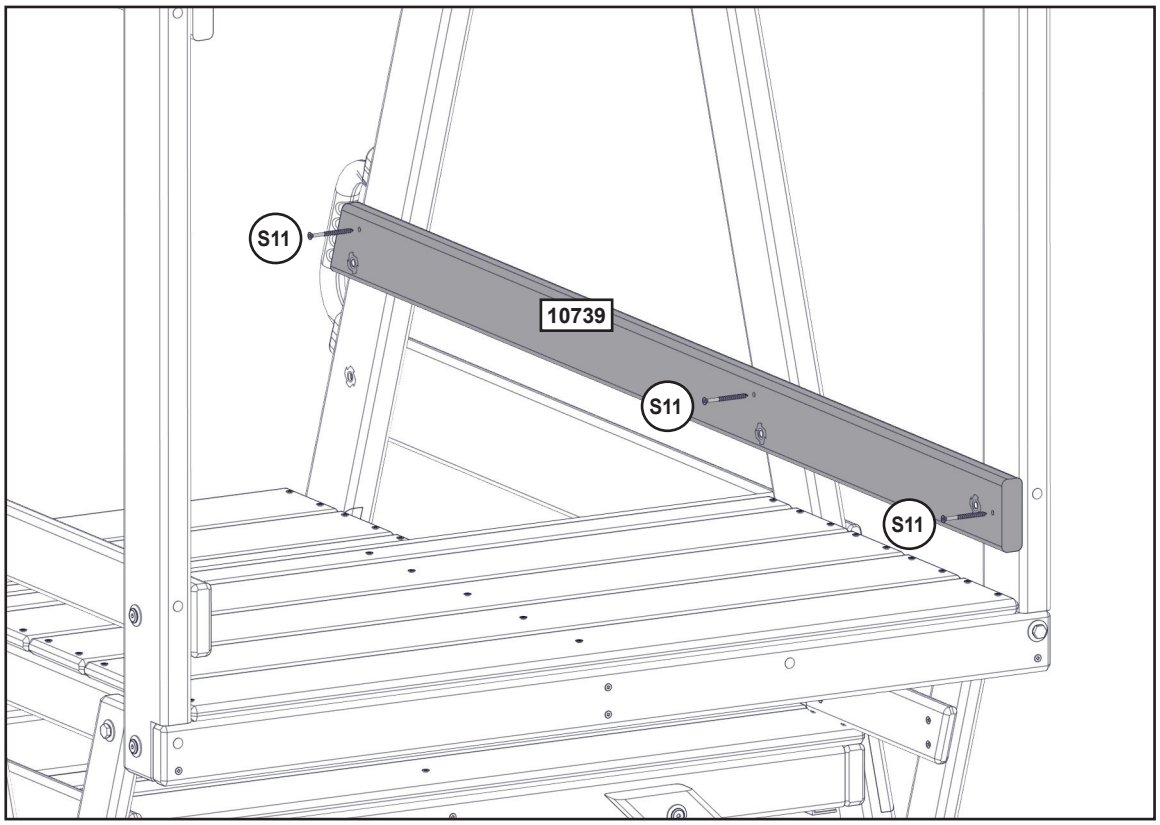

Hardware

3 x (S11) #8 x 50.8mm (#8 x 2")

europecustomerservice@kidkraft.com
+31 20 305 8620
M-F from 09:00 to 17:30 (GMT+1)

parts.kidkraft.eu

65



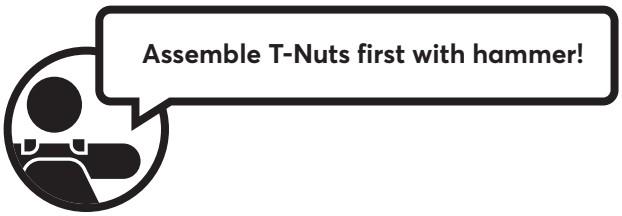

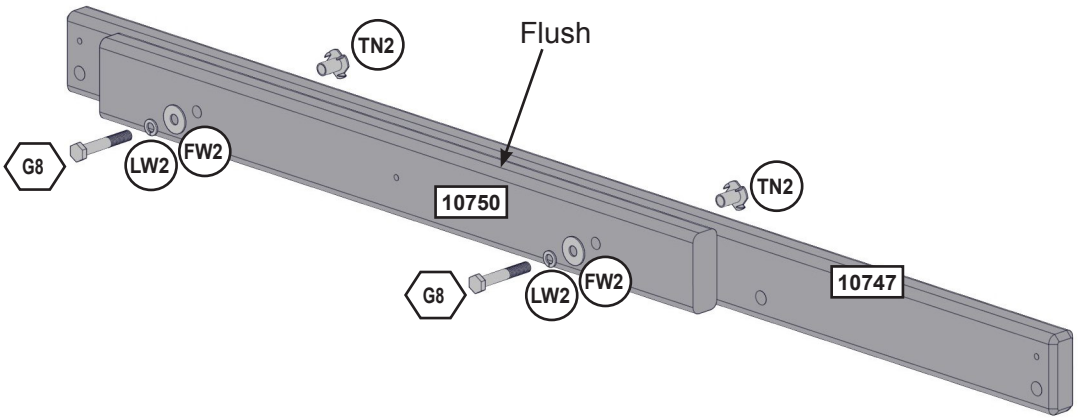

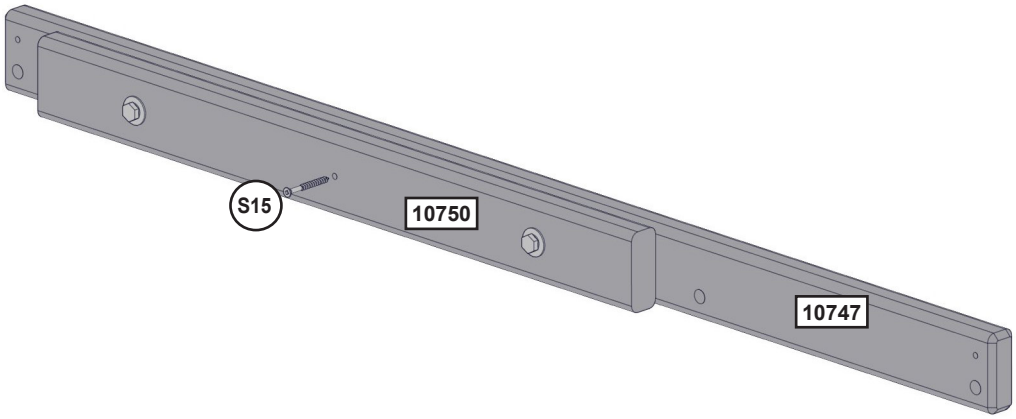

Wood Parts

1 x 10747 25.4 x 63.5 x 1035 mm (1" X 2 1/2" X 40 3/4")
1 x 10750 25.4 x 63.5 x 620 mm (1" X 2 1/2" X 24 7/16")

Hardware

1 x S15 #8 x 44.5mm (#8 x 1-3/4")
2 x G8 7.9mm x 50.8mm (5/16" x 2")(FW2, LW2, TN2)

66

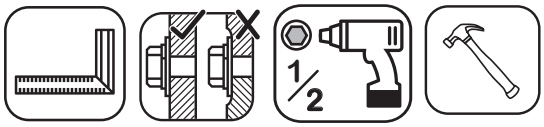



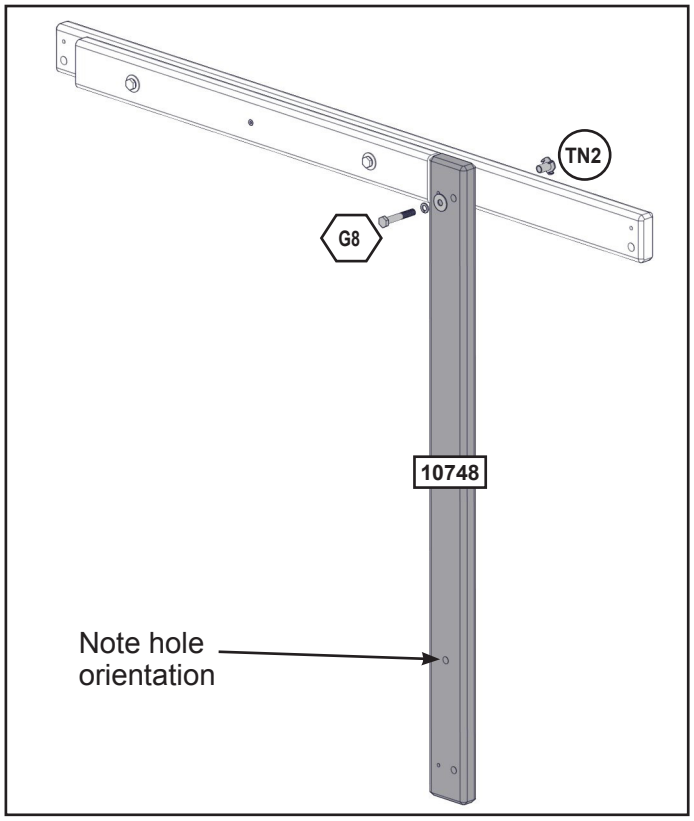

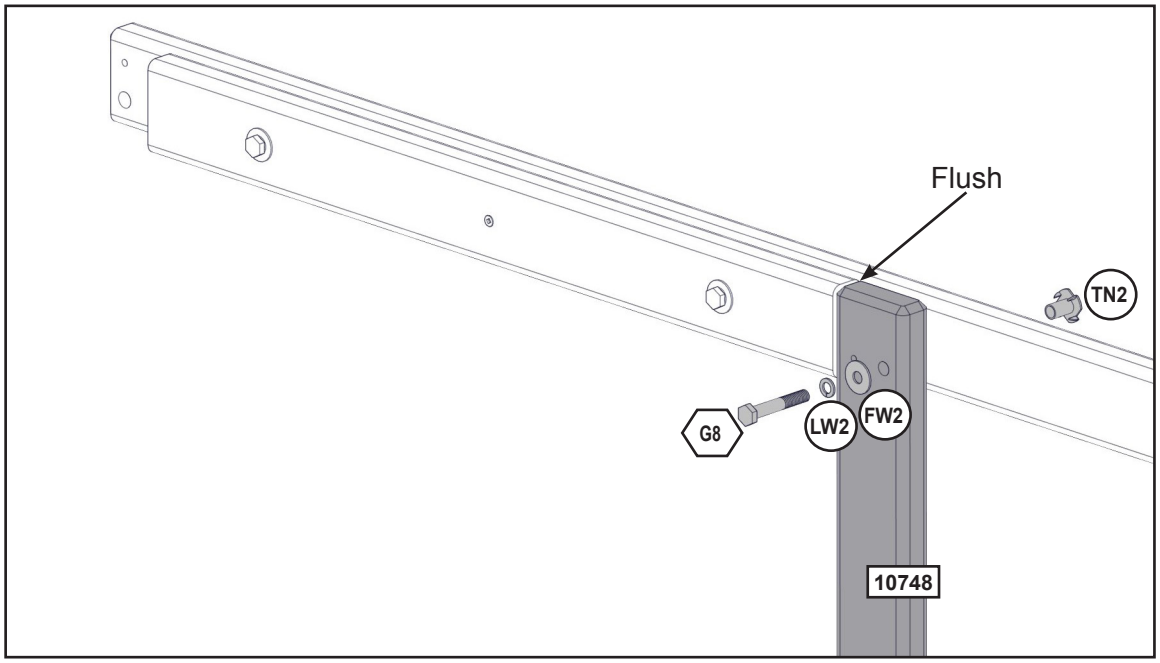

Wood Parts

1 x 10748 25.4 x 63.5 x 850.9 mm (1" X 2 1/2" X 33 1/2")

Hardware

1 x G8 7.9mm x 50.8mm (5/16" x 2")(FW2, LW2,TN2)

europecustomerservice@kidkraft.com
+31 20 305 8620
M-F from 09:00 to 17:30 (GMT+1)

parts.kidkraft.eu

67

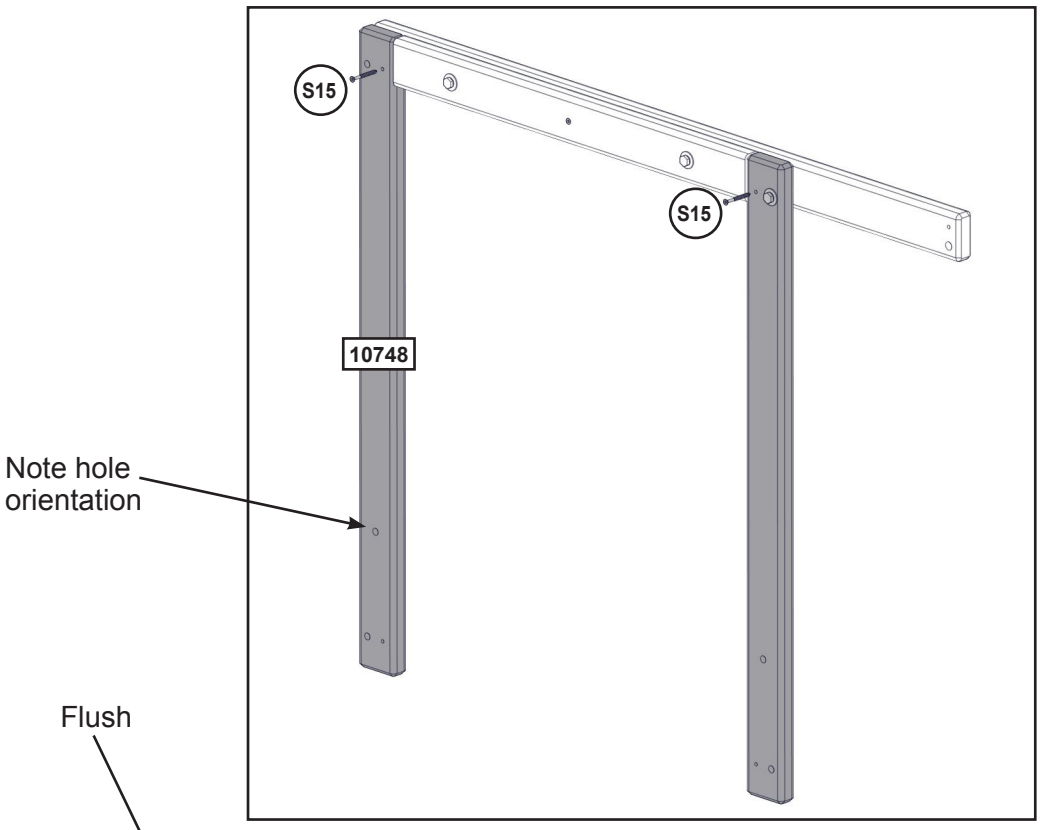

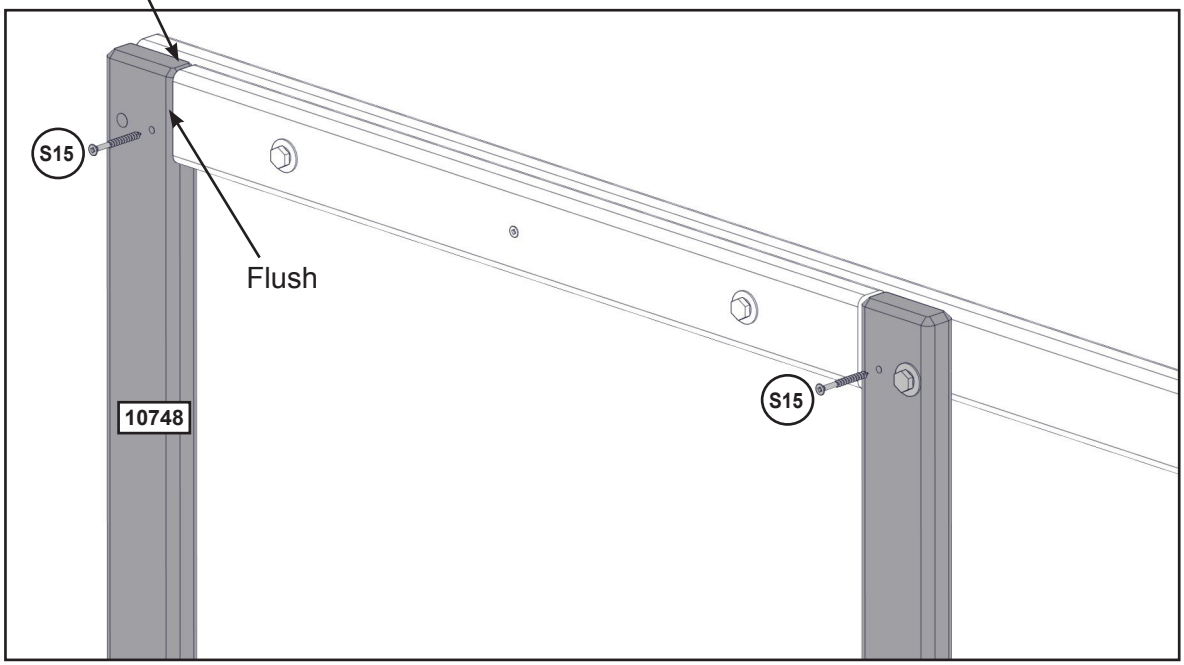

Wood Parts

1 x 10748 25.4 x 63.5 x 850.9 mm (1" X 2 1/2" X 33 1/2")

Hardware

2 x S15 #8 x 44.5mm (#8 x 1-3/4")

68

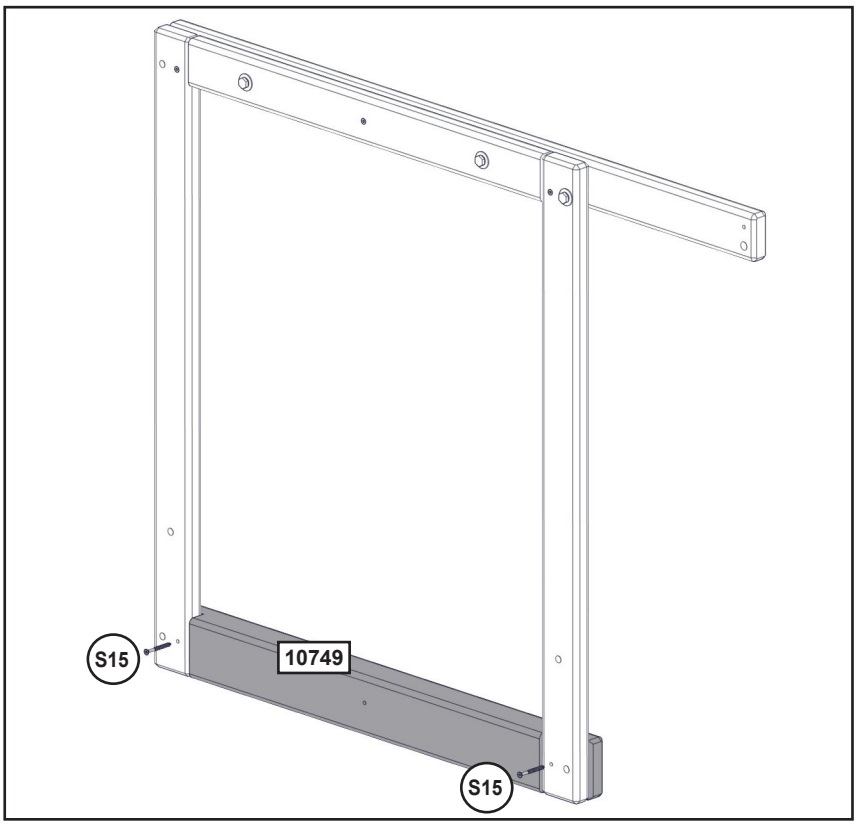

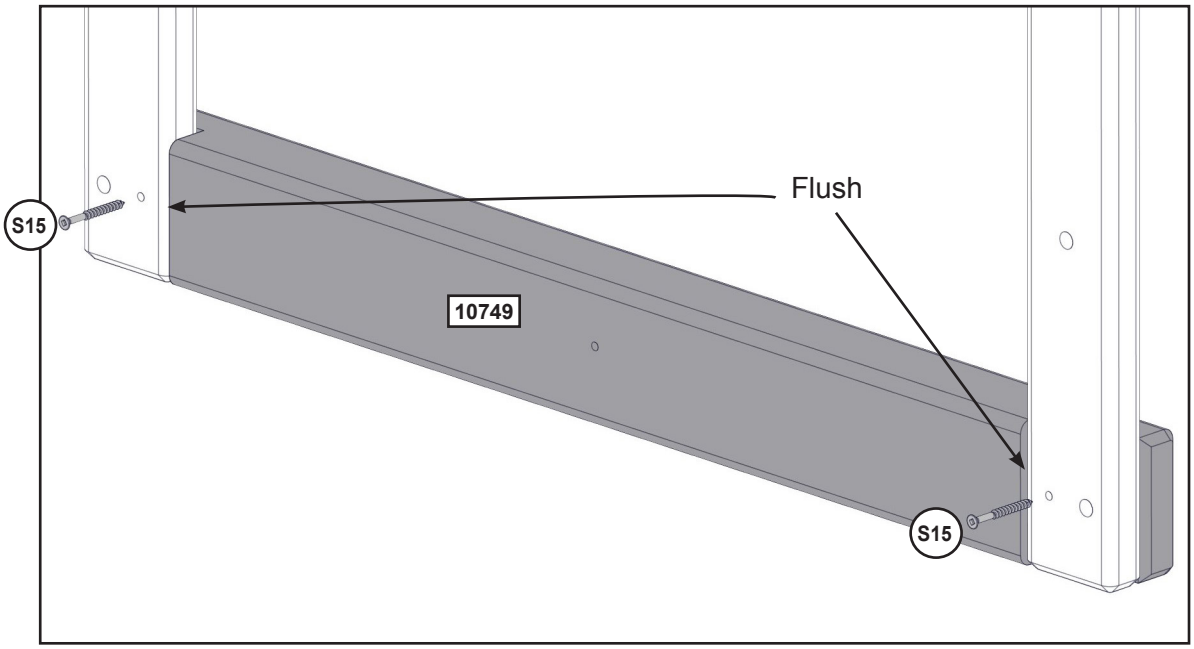

Wood Parts

1 x 10749 50.8 x 79.4 x 747 mm (2” X 3 1/8” X 29 7/16”)

Hardware

2 x S15 #8 x 44.5mm (#8 x 1-3/4”)

europecustomerservice@kidkraft.com
+31 20 305 8620
M-F from 09:00 to 17:30 (GMT+1)

parts.kidkraft.eu

69 **Note: Structure partly removed for clarity.**

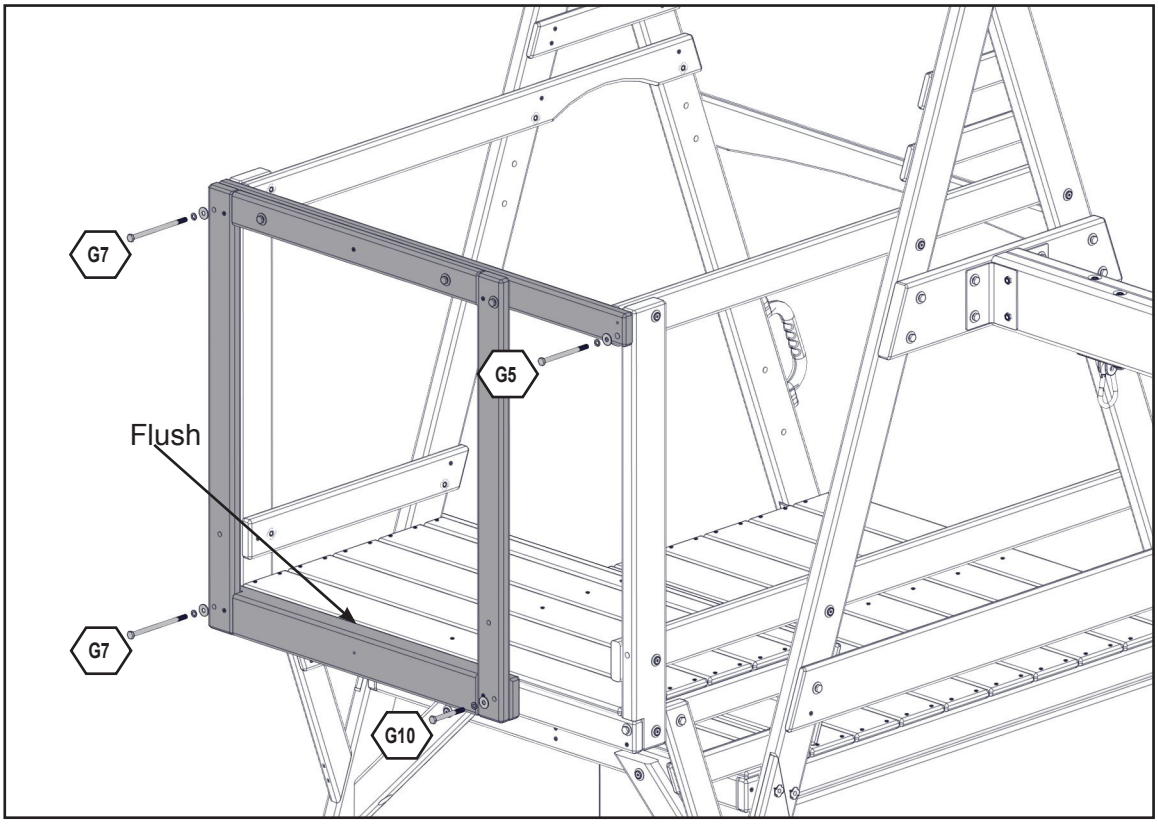

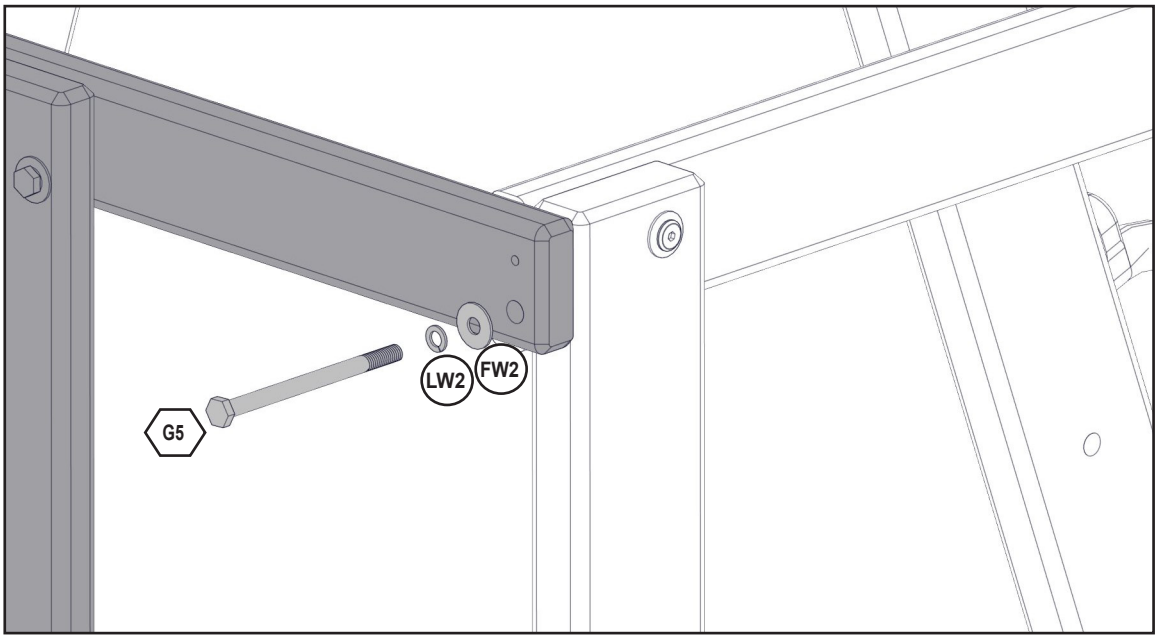

Hardware

1 x G5 7.9mm x 114.3mm (5/16 x 4-1/2")(LW2,FW2)

2 x G7 7.9mm x 139.7 mm (5/16 x 5-1/2") (FW2, LW2)

1 x G10 7.9mm x 76.2mm (5/16" x 3")(FW2, LW2)

70 **Note: Structure partly removed for clarity.**

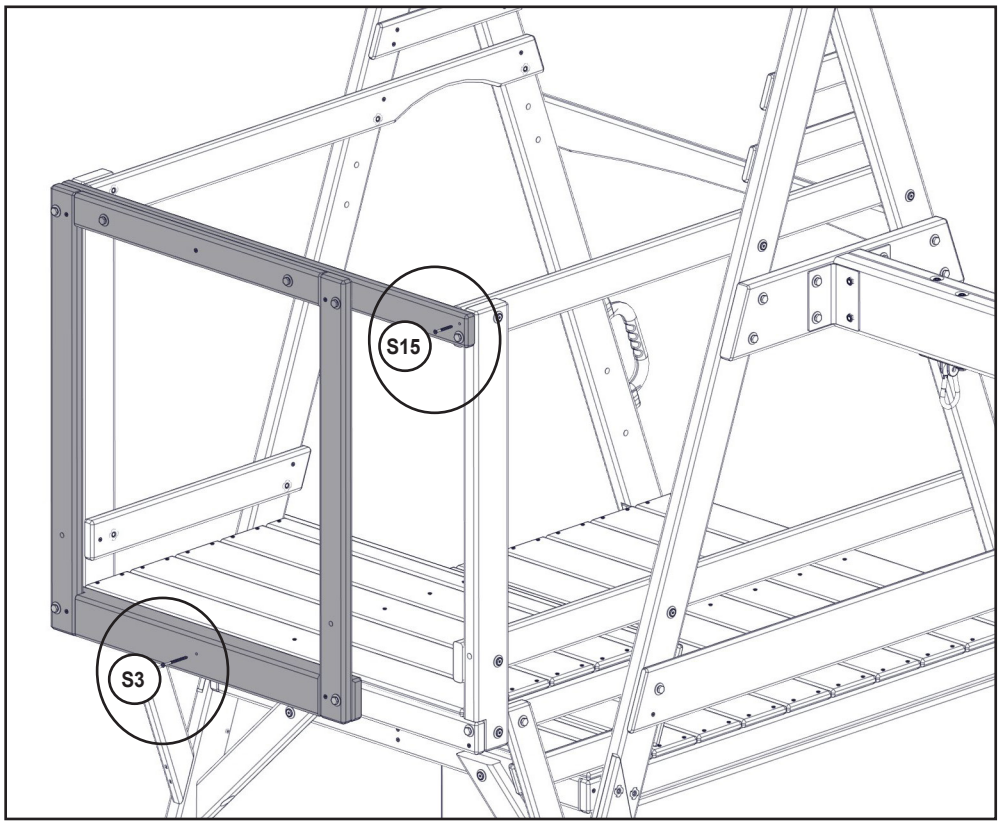

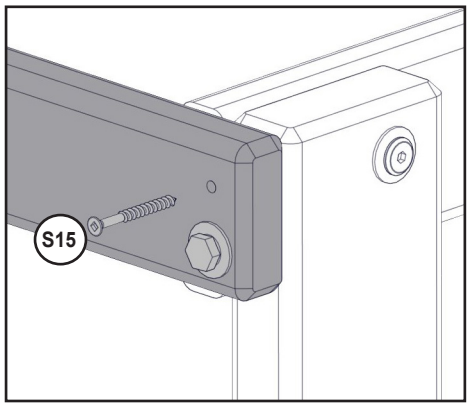

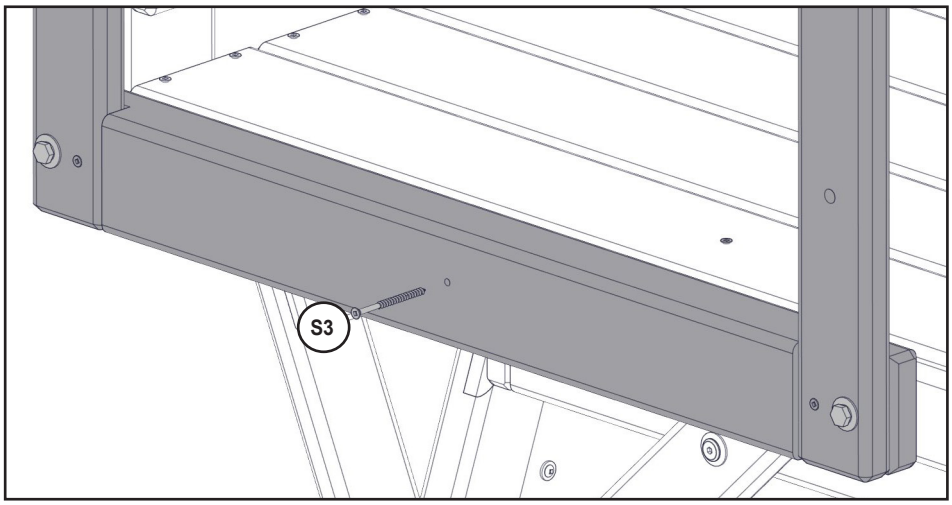

Hardware

1 x (S3) #8 x 63.5mm (#8 x 2-1/2")

1 x (S15) #8 x 44.5mm (#8 x 1-3/4")

71

Note: Structure partly removed for clarity.

Assemble T-Nuts first with hammer!



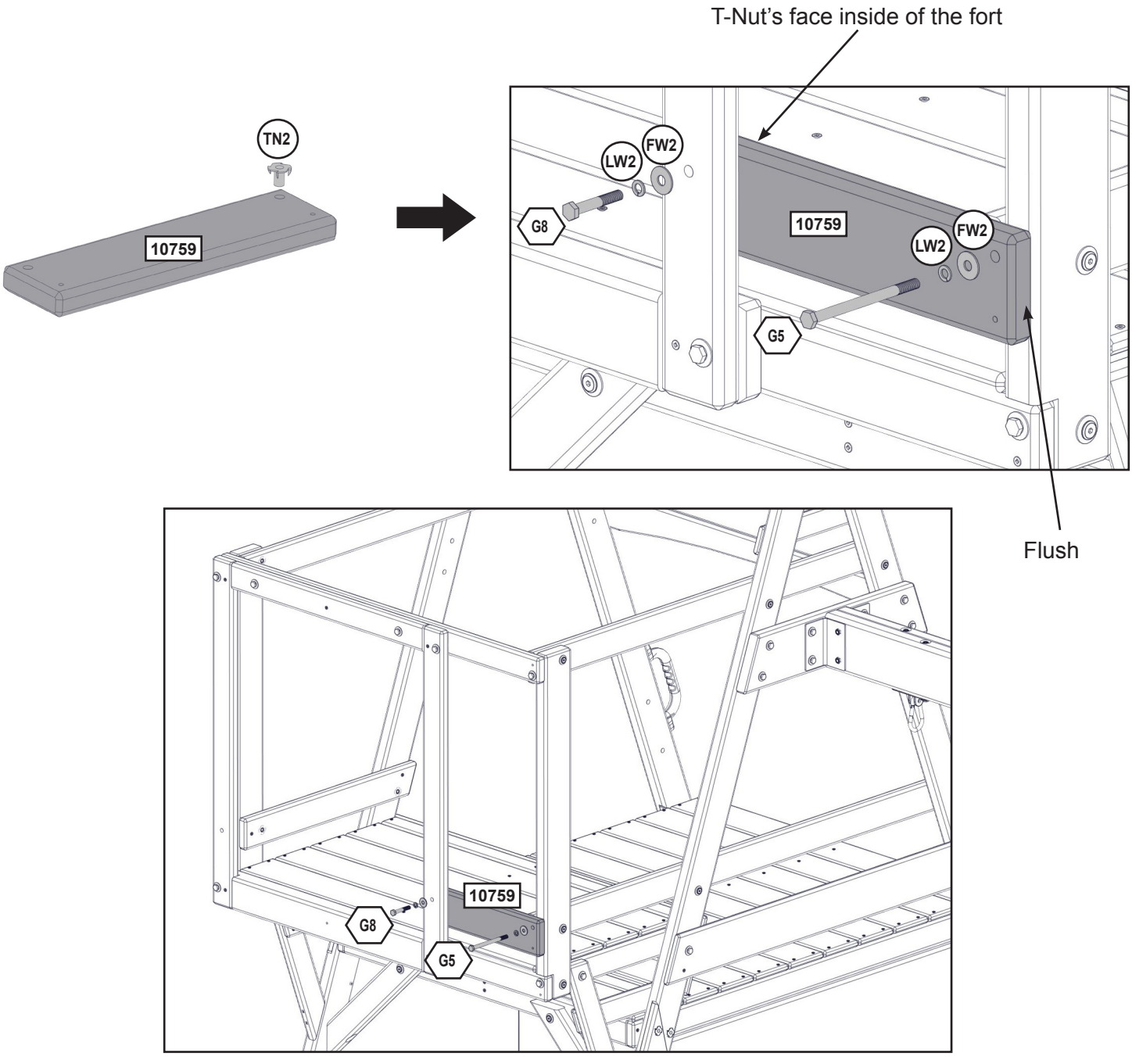

Wood Parts

1 x 10759 25.4 x 88.9 x 338.4 mm (1" X 3 1/2" X 13 5/16")

Hardware

1 x G5 7.9mm x 114.3mm (5/16 x 4-1/2")(LW2,FW2)

1 x G8 7.9mm x 50.8mm (5/16" x 2")(FW2, LW2) 1 x TN2

72 **Note: Structure partly removed for clarity.**

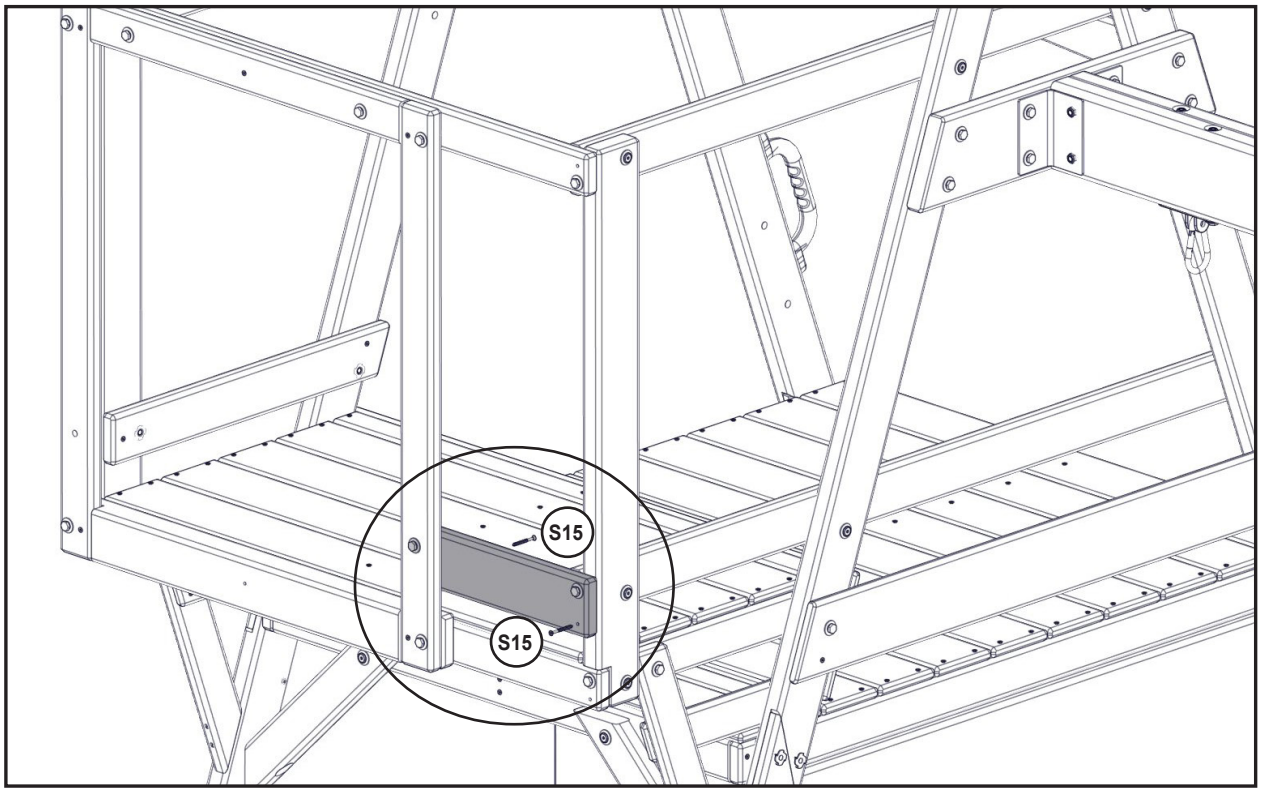

Outside View

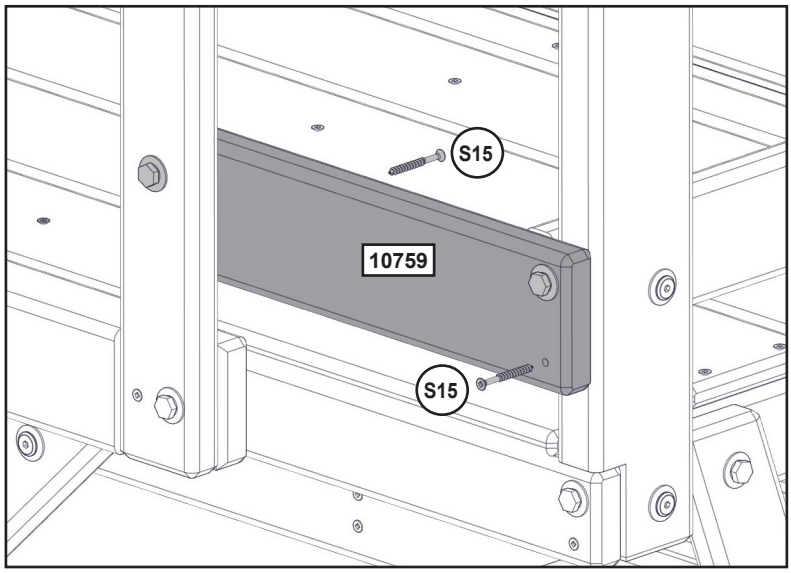

Rotated Interior view

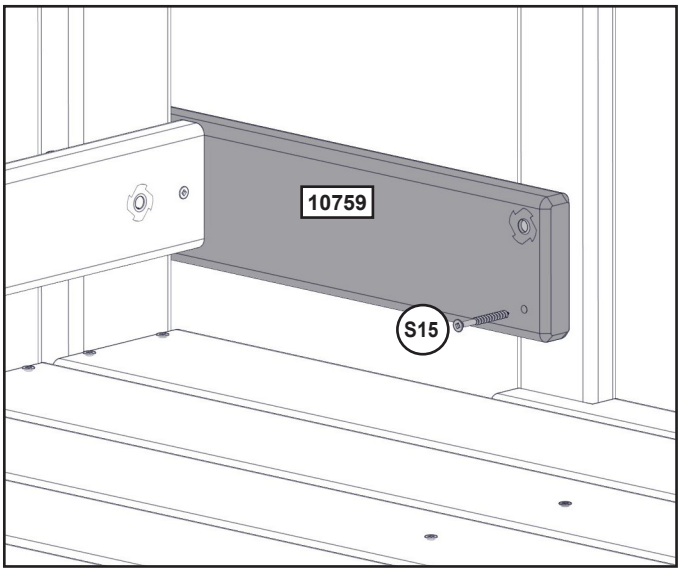

Hardware

2 x (S15) #8 x 44.5mm (#8 x 1-3/4")

europecustomerservice@kidkraft.com
+31 20 305 8620
M-F from 09:00 to 17:30 (GMT+1)

parts.kidkraft.eu

73 **Note: Structure partly removed for clarity.**

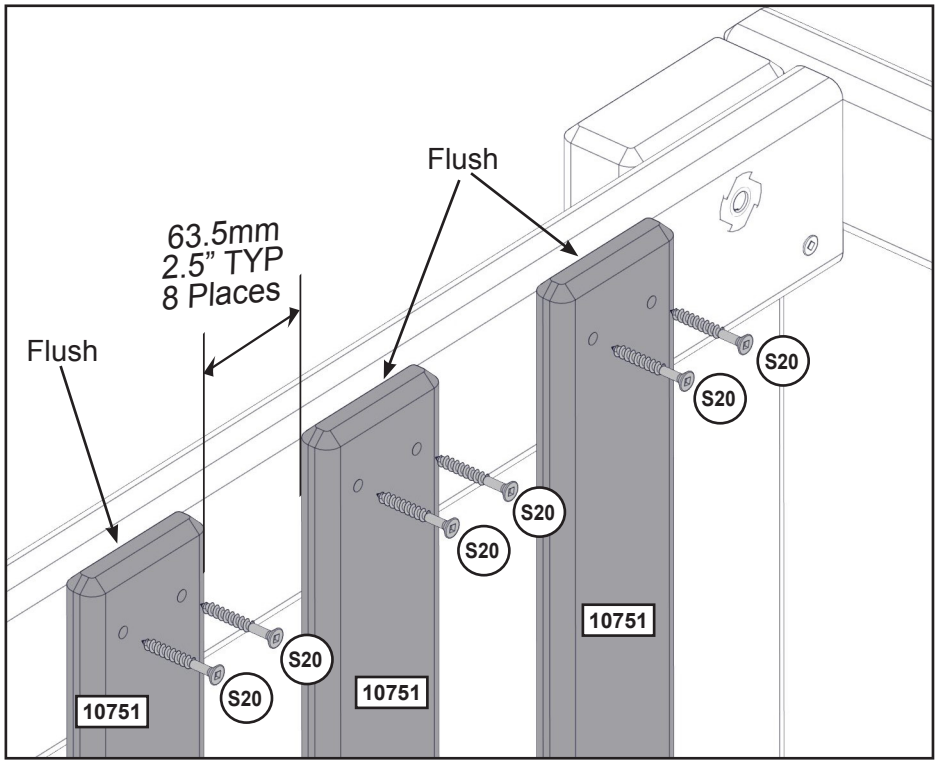

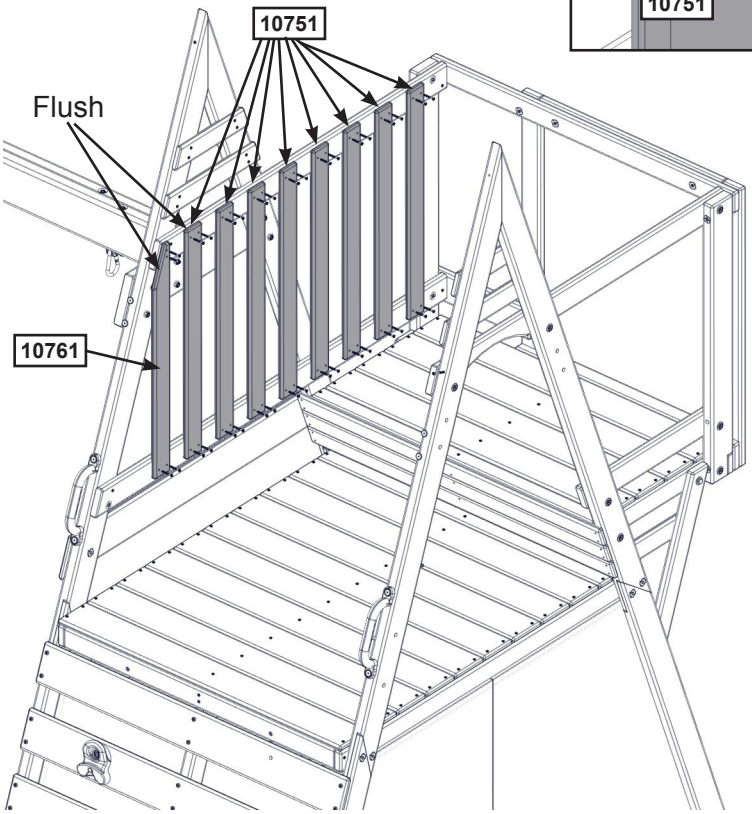

Wood Parts

8 x [10751] 15.9 x 63.5 x 700 mm (5/8" X 2 1/2" X 27 9/16")
1 x [10761] 15.9 x 63.5 x 700 mm (5/8" X 2 1/2" X 27 9/16")

Hardware

36 x (S20) #8 x 34.9mm (#8 x 1-3/8")

74

Note: Structure partly removed for clarity.

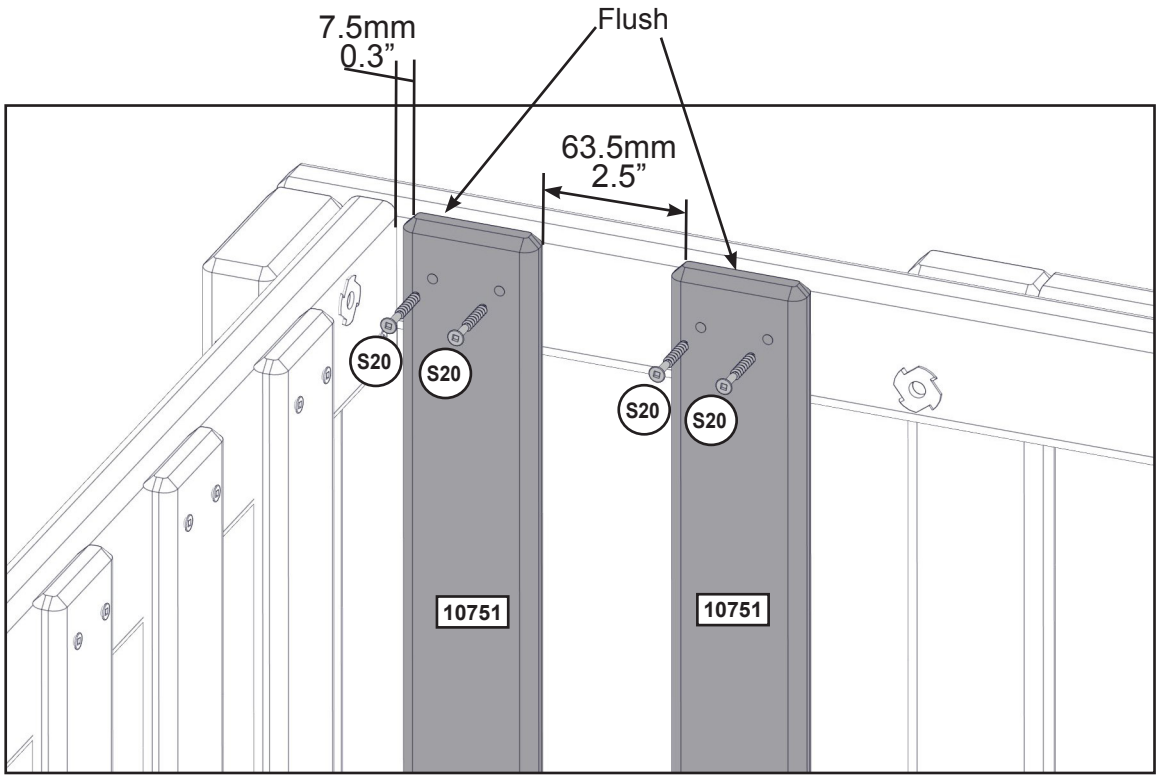

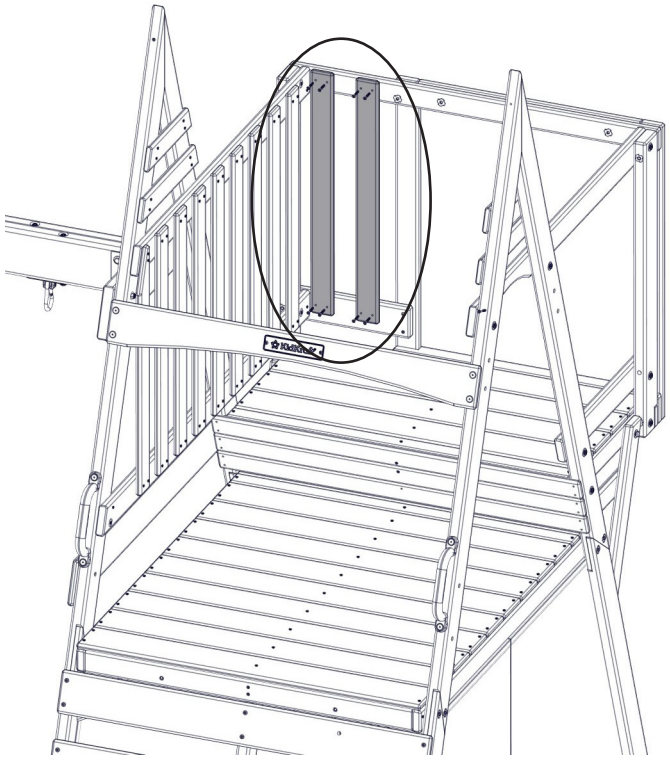

Wood Parts

2 x 10751 15.9 x 63.5 x 700 mm (5/8” X 2 1/2” X 27 9/16”)

Hardware

8 x S20 #8 x 34.9mm (#8 x 1-3/8”)

europecustomerservice@kidkraft.com
+31 20 305 8620
M-F from 09:00 to 17:30 (GMT+1)

parts.kidkraft.eu

75

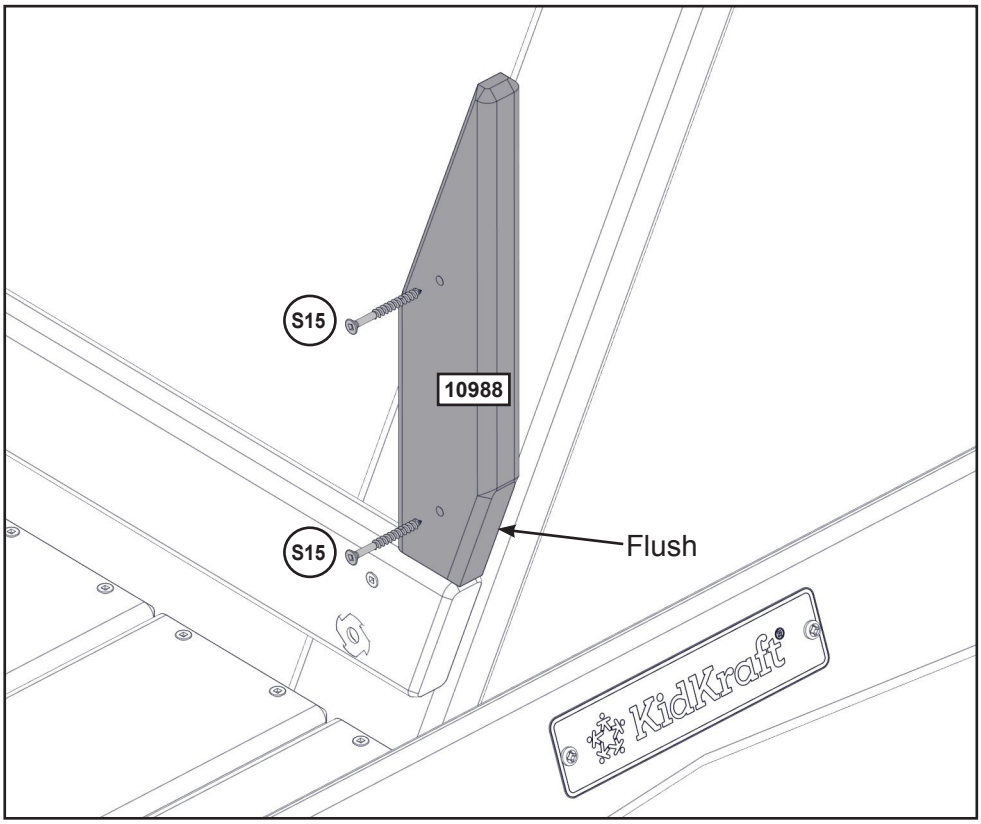

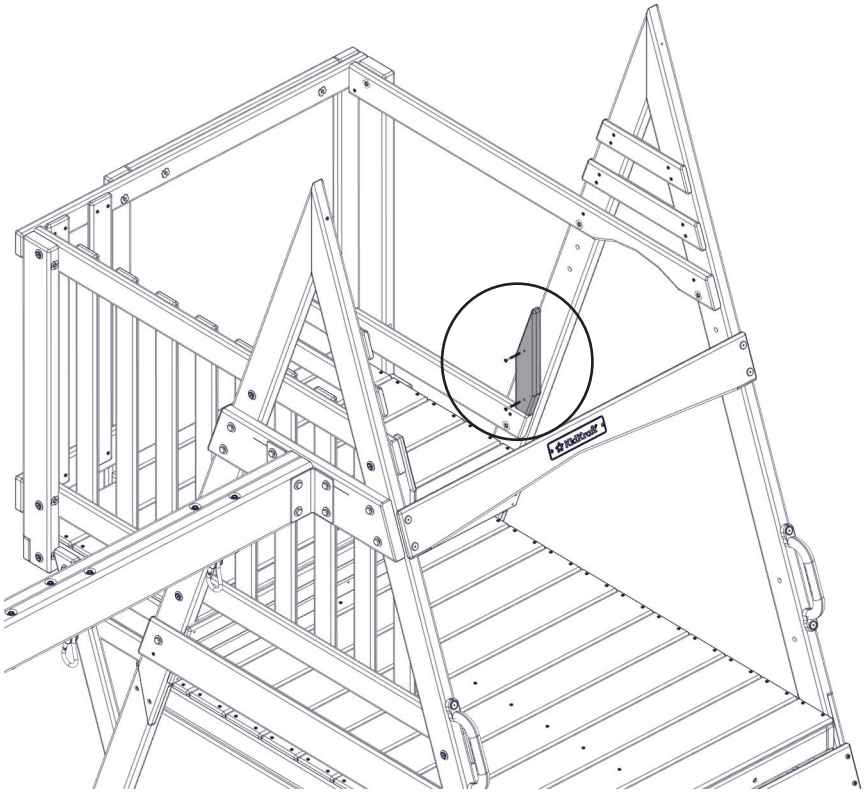

Wood Parts

1 x 10988 23.8 x 63.5 x 285 mm (15/16” x 2 1/2” x 11 1/4”)

Hardware

2 x S15 #8 x 44.5mm (#8 x 1-3/4”)

76

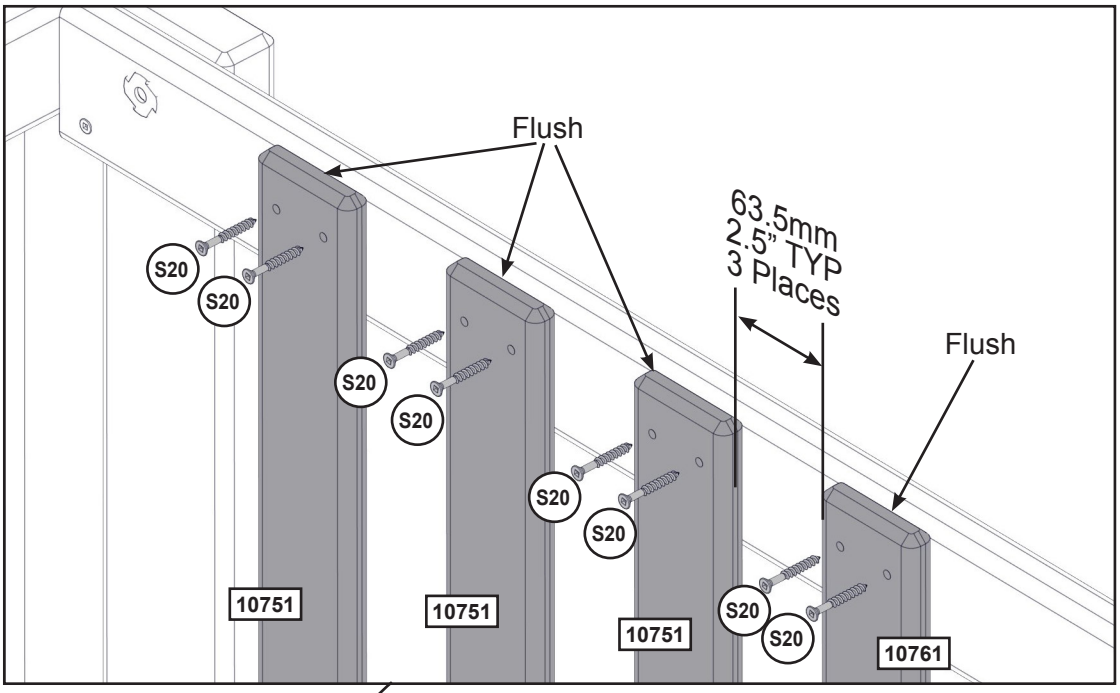

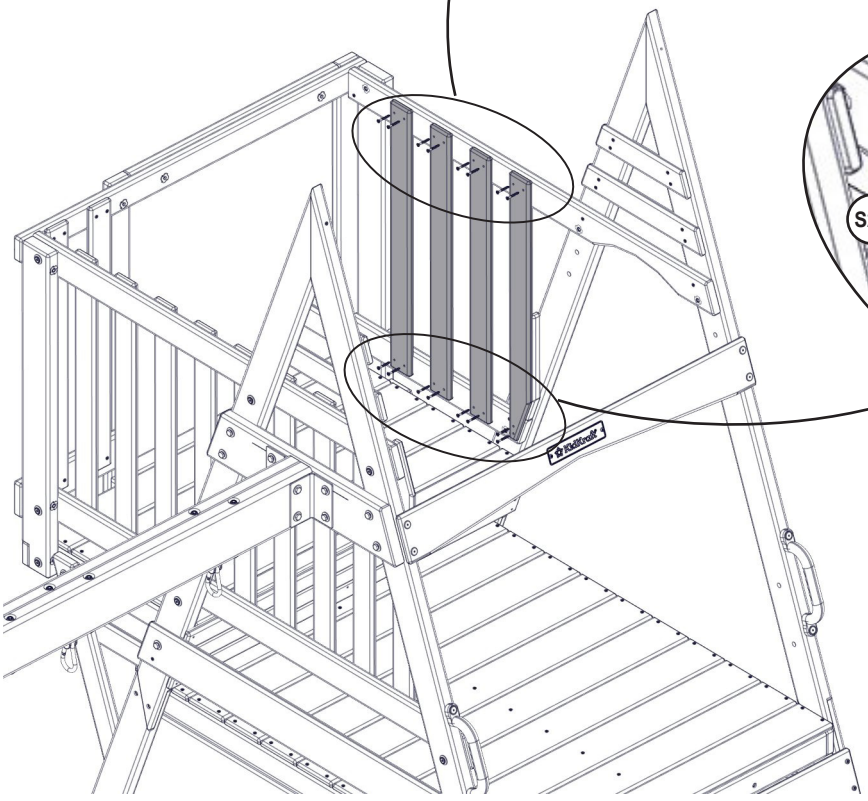

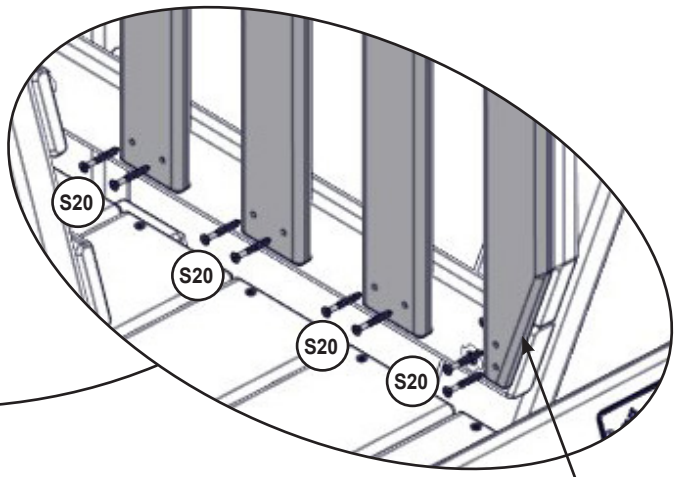

Wood Parts

3 x 10751 15.9 x 63.5 x 700 mm (5/8" X 2 1/2" X 27 9/16")

1 x 10761 15.9 x 63.5 x 700 mm (5/8" X 2 1/2" X 27 9/16")

Hardware

16 x S20 #8 x 34.9mm (#8 x 1-3/8")

europecustomerservice@kidkraft.com
+31 20 305 8620
M-F from 09:00 to 17:30 (GMT+1)

parts.kidkraft.eu

77 **Note: Structure partly removed for clarity.**

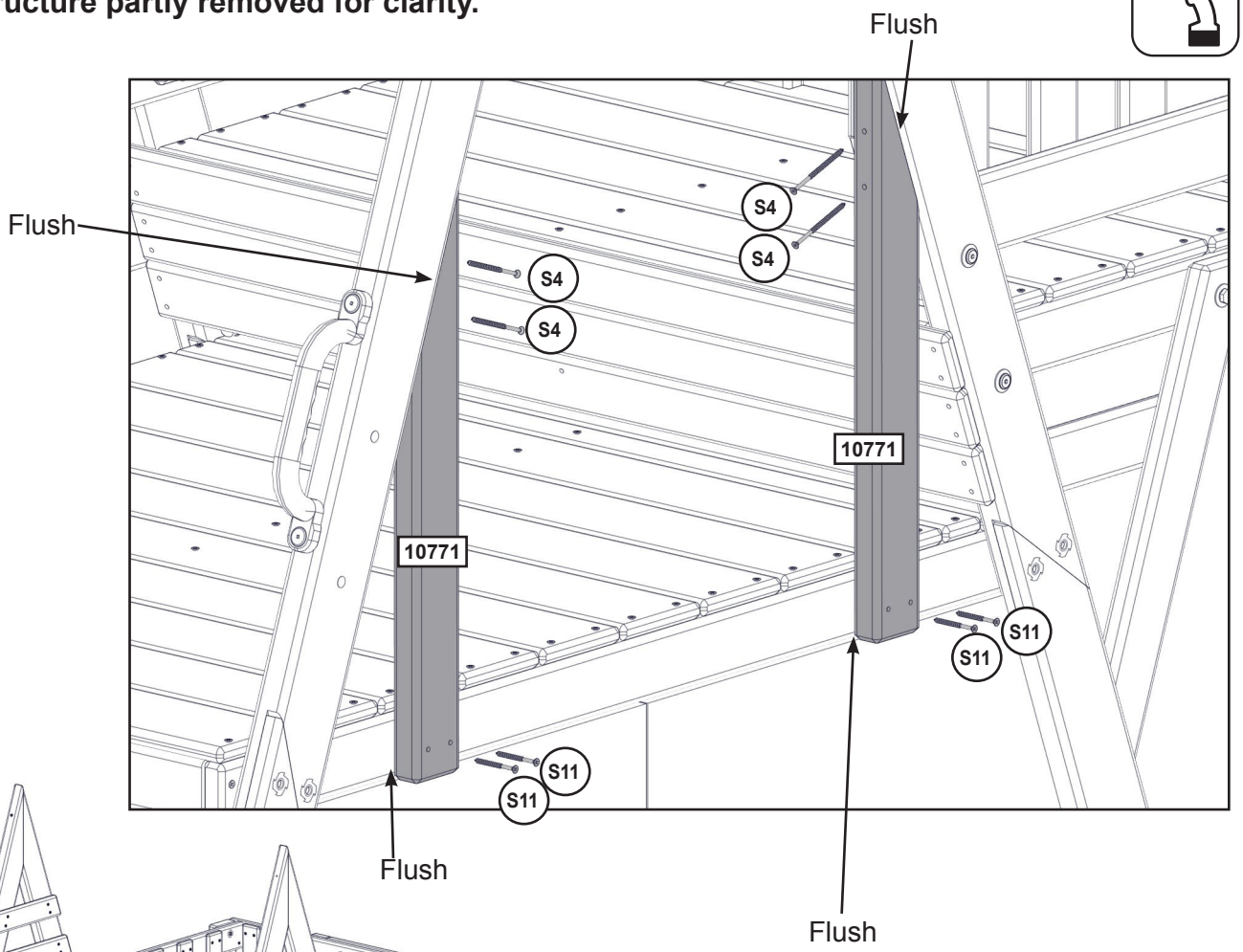

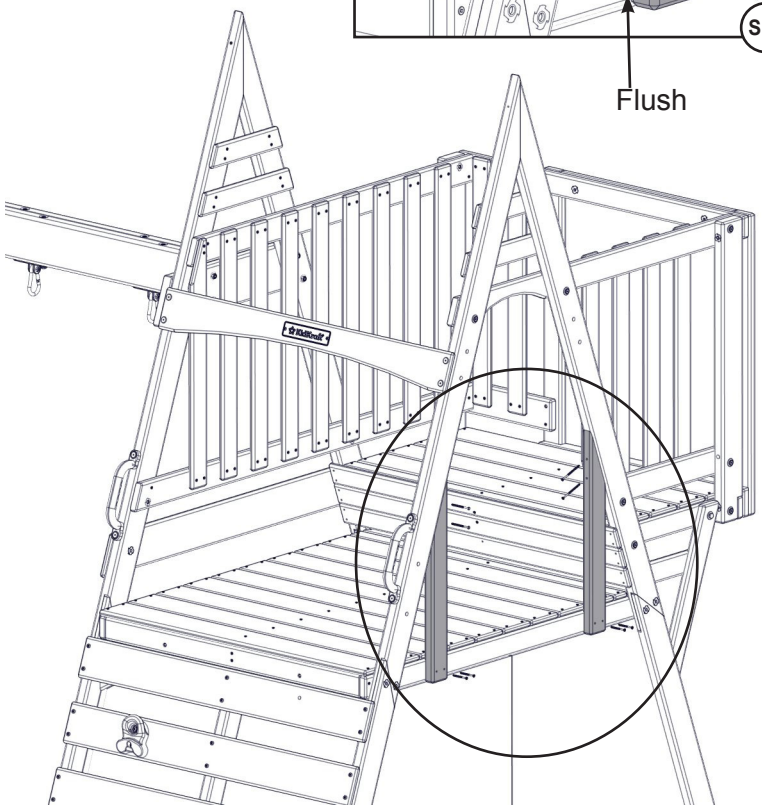

Wood Parts

2 x [10771] 31.8 x 63.5 x 577.3 mm (1 1/4" x 2 1/2" x 22 3/4")

Hardware

4 x (S4) #8 x 76.2mm (#8 x 3")

4 x (S11) #8 x 50.8mm (#8 x 2")

78

Note: Structure partly removed for clarity.

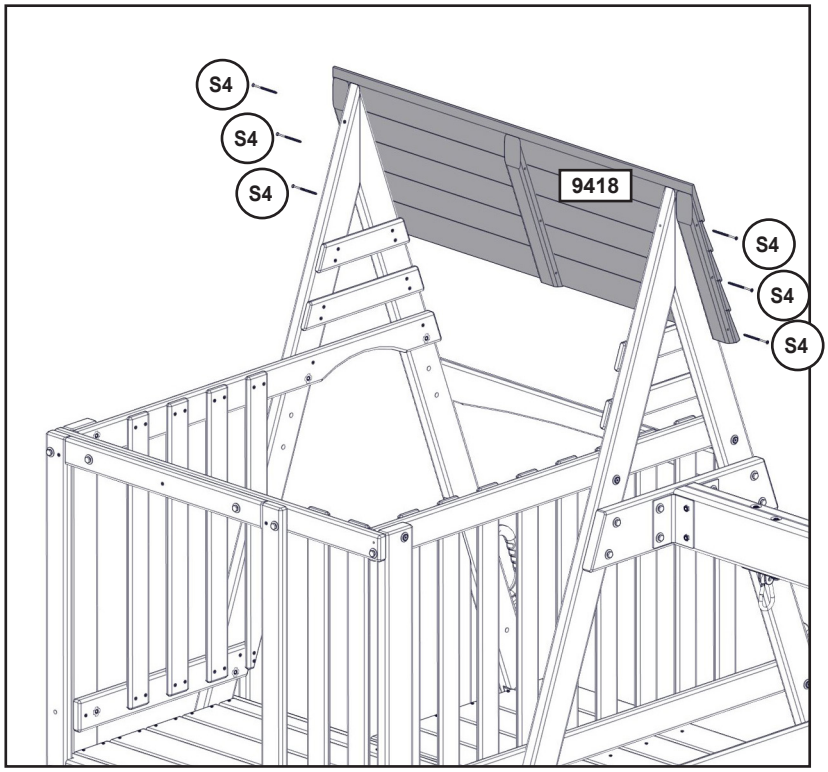

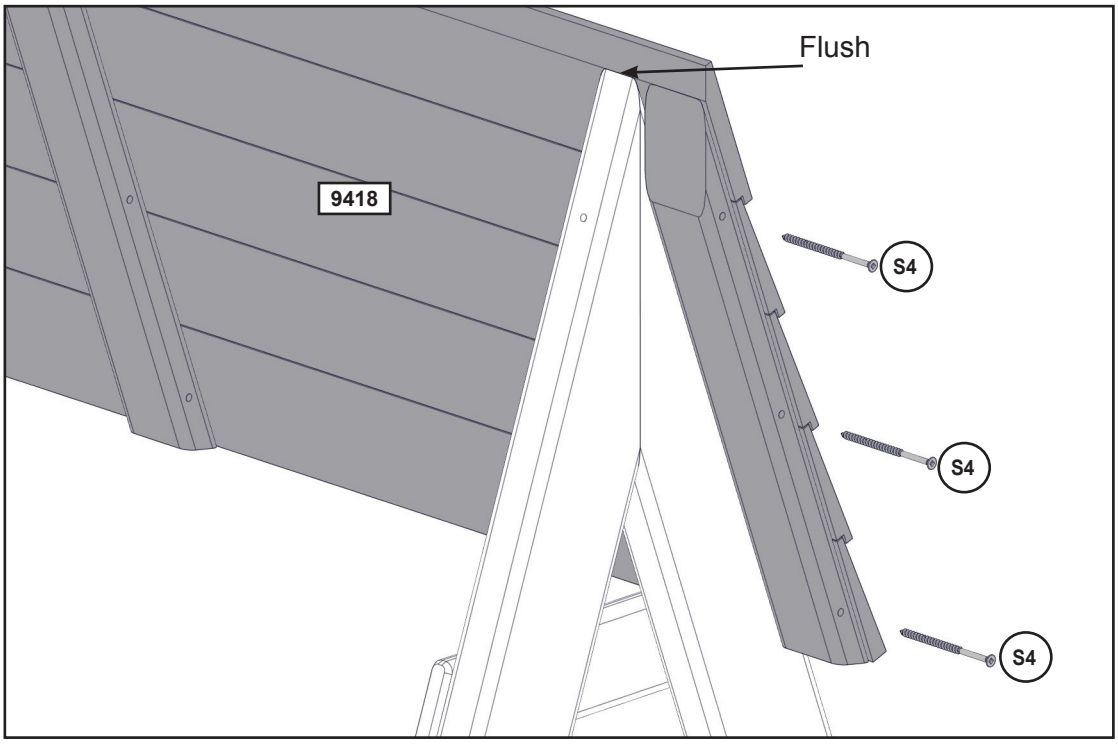

Wood Parts

1 x 9418 38.1 x 435.6 x 1140.6 mm (1 1/2" x 17 1/8" x 44 7/8")

Hardware

6 x S4 #8 x 76.2mm (#8 x 3")

europecustomerservice@kidkraft.com
+31 20 305 8620
M-F from 09:00 to 17:30 (GMT+1)

79 **Note: Structure partly removed for clarity.**

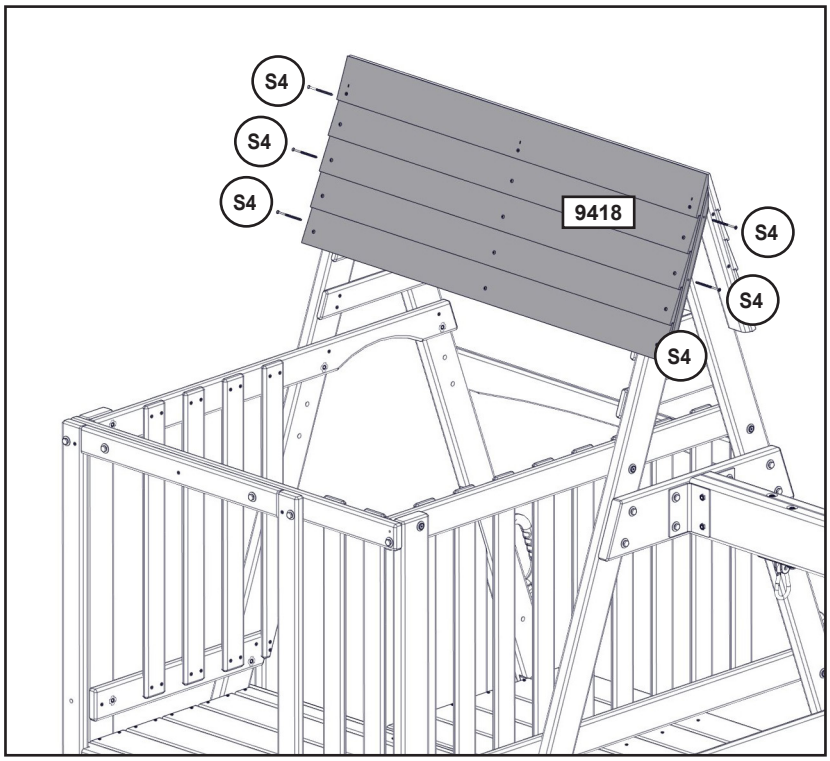

Outside View

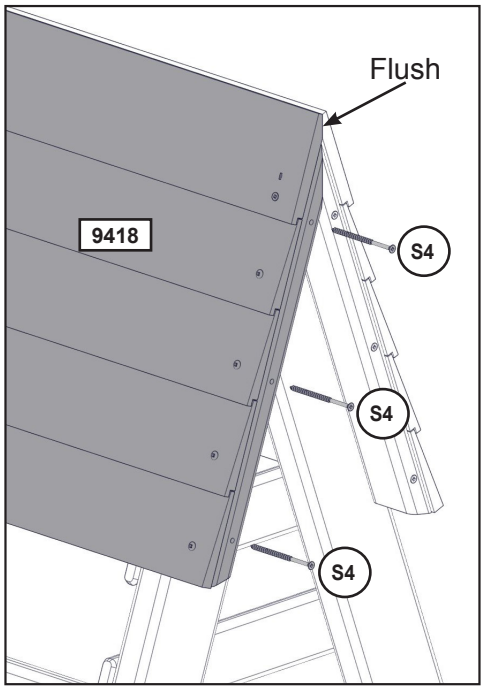

Wood Parts

1 x 9418 38.1 x 435.6 x 1140.6 mm (1 1/2" x 17 1/8" x 44 7/8")

Hardware

6 x S4 #8 x 76.2mm (#8 x 3")

80

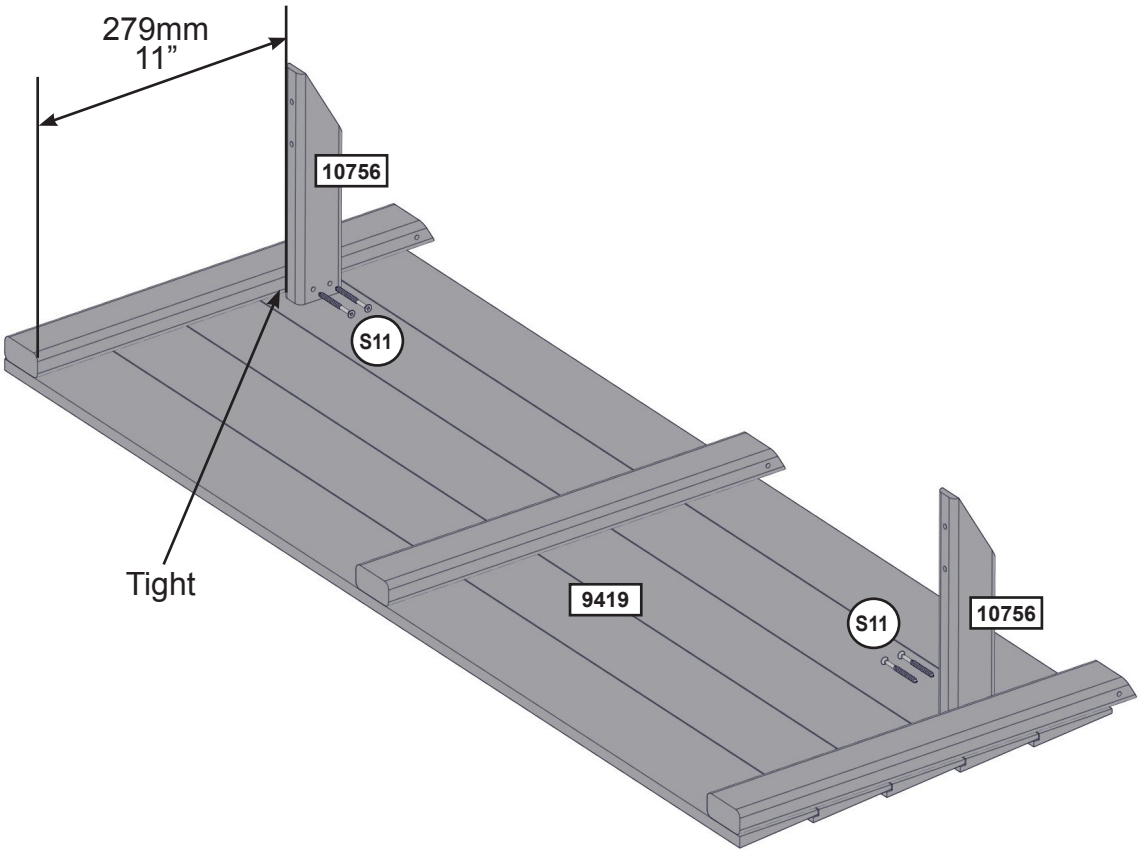

Wood Parts

1 x 9419 38.1 x 453 x 1140.6 mm (1 1/2” x 17 13/16” x 44 7/8”)

2 x 10756 25.4 x 50.8 x 240 mm (1” X 2” X 9 7/16”)

Hardware

4 x S11 #8 x 50.8mm (#8 x 2”)

81 **Note: Structure partly removed for clarity.**

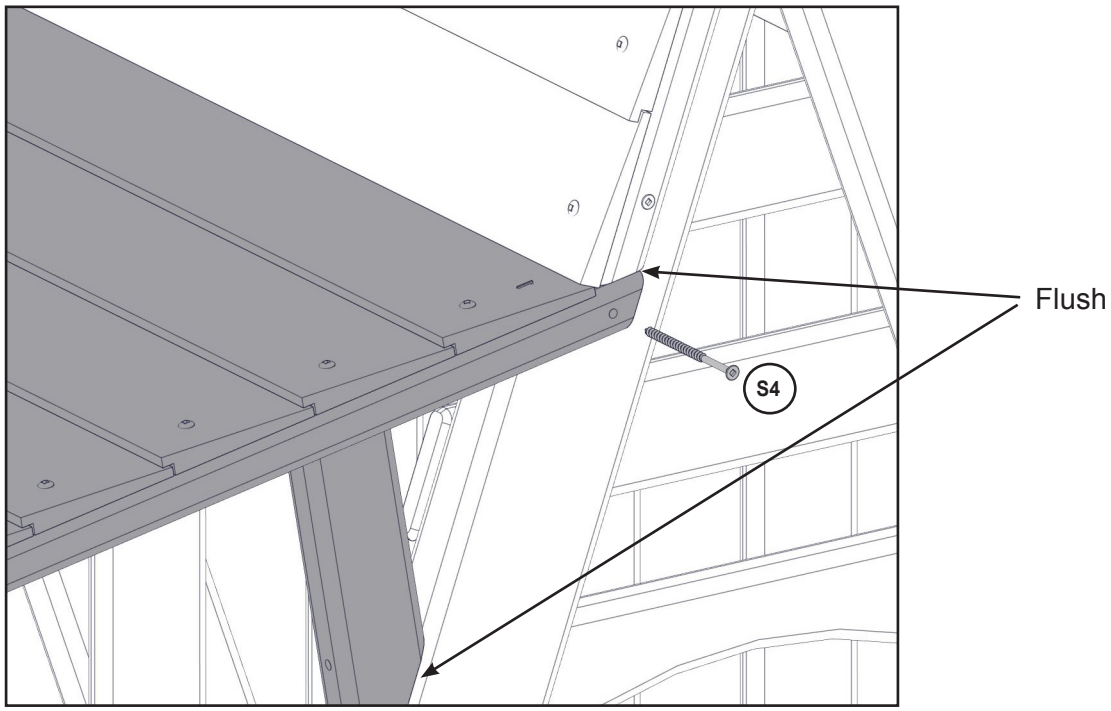

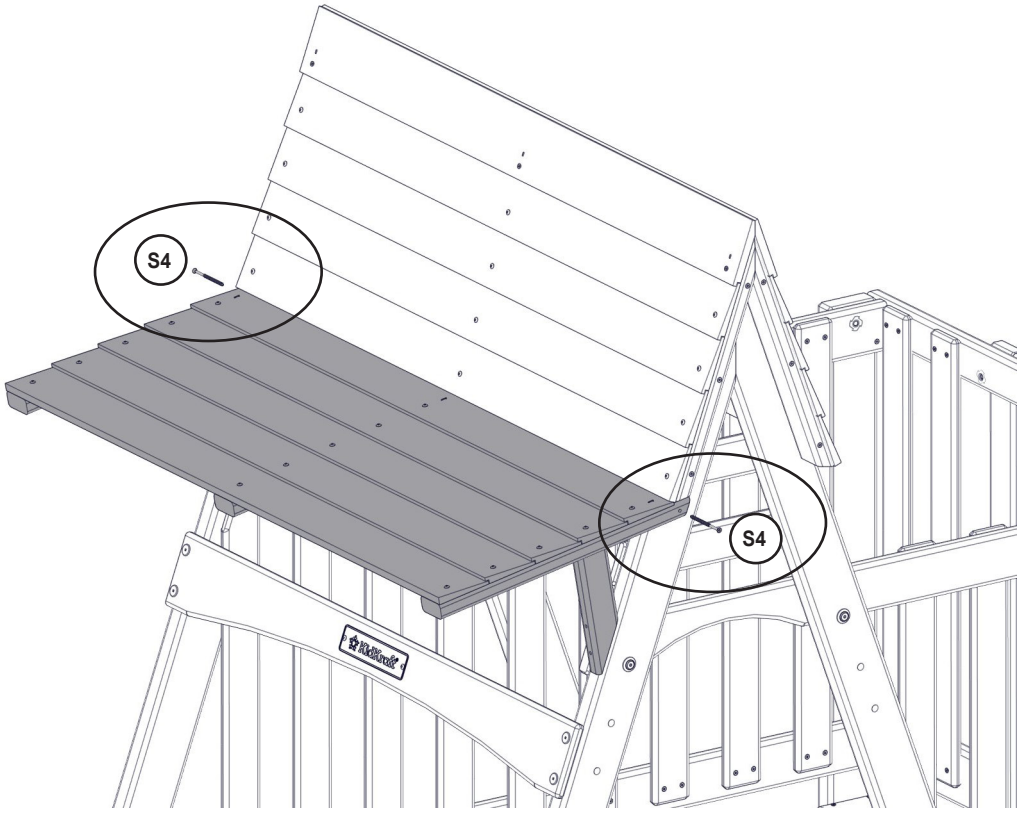

Hardware

2 x (S4) #8 x 76.2mm (#8 x 3")

82 **Note: Structure partly removed for clarity.**

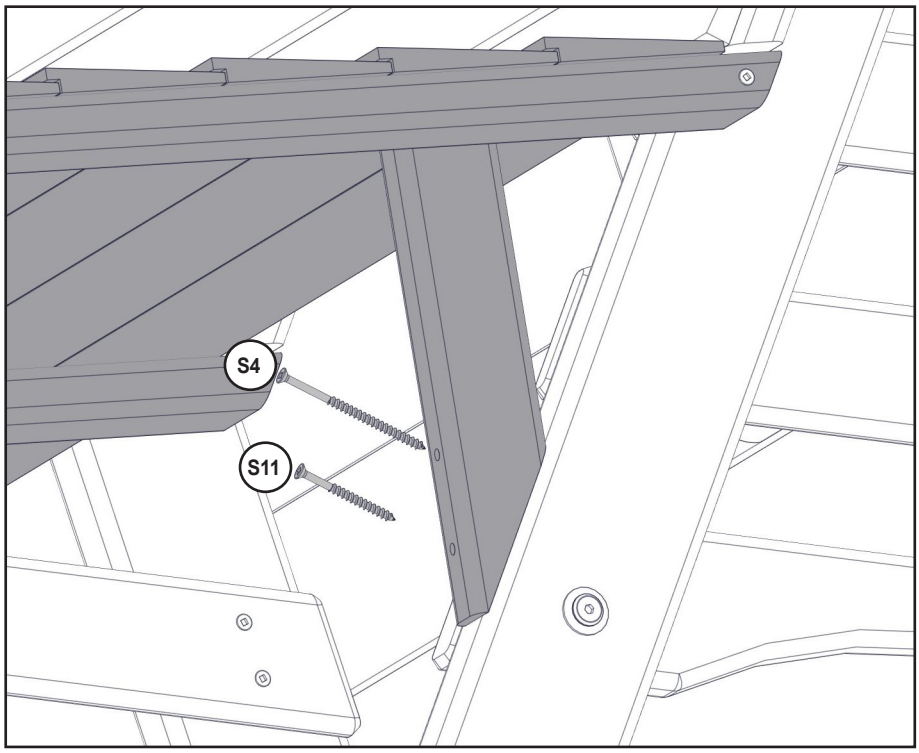

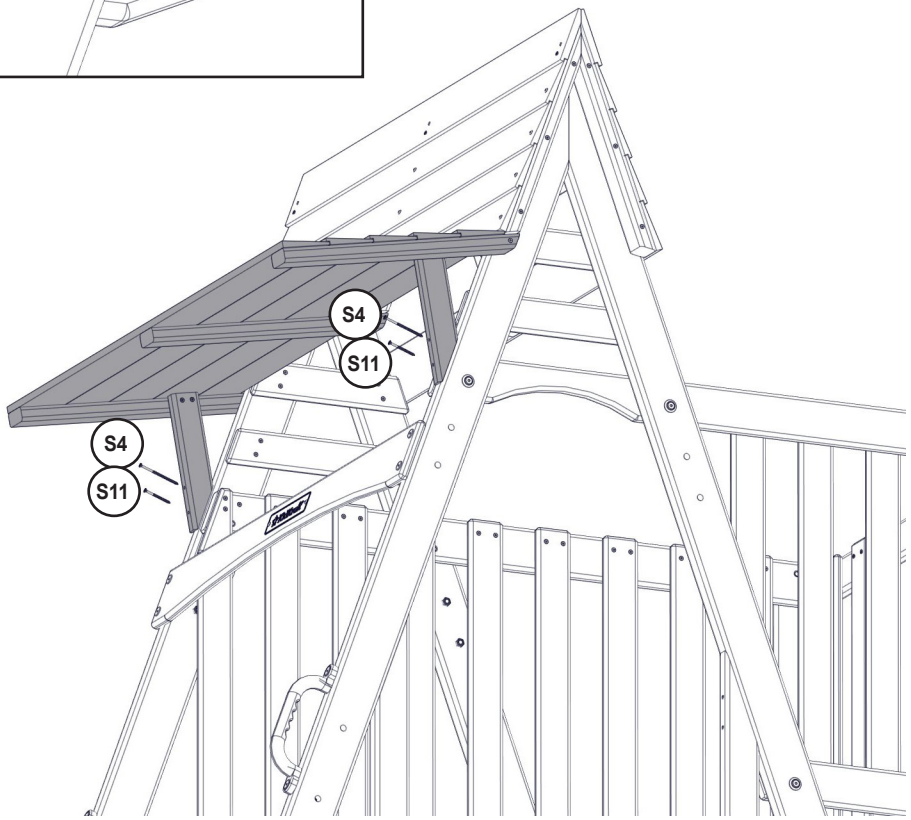

Hardware

2 x (S4) #8 x 76.2mm (#8 x 3")

2 x (S11) #8 x 50.8mm (#8 x 2")

europecustomerservice@kidkraft.com
+31 20 305 8620
M-F from 09:00 to 17:30 (GMT+1)

parts.kidkraft.eu

83 **Note: Structure partly removed for clarity.**

Inside and underneath view

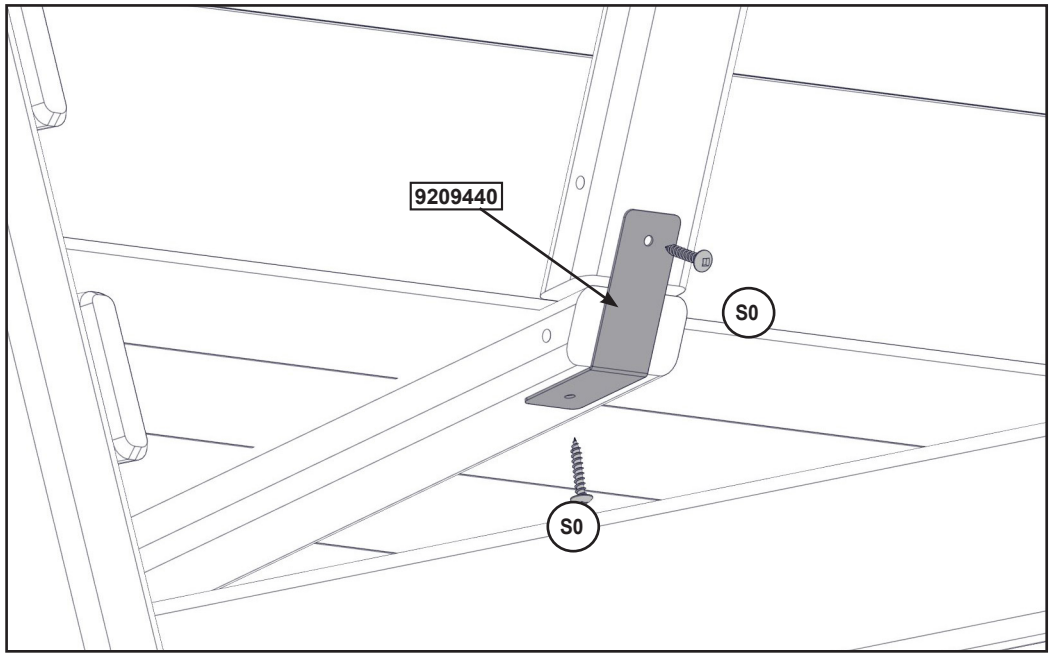

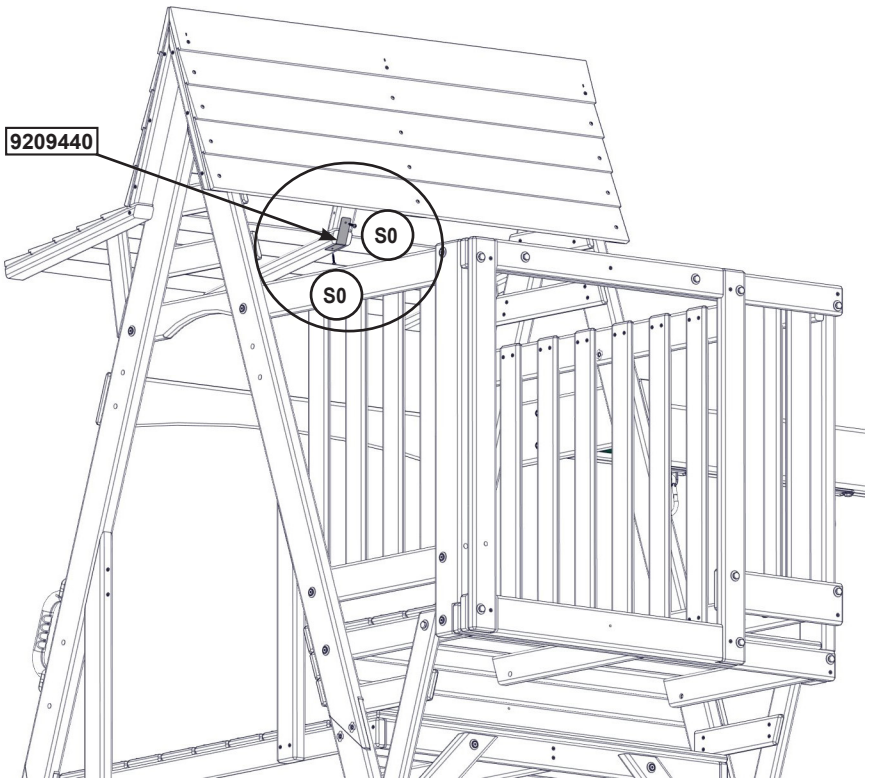

Hardware

2 x S0 #8 x 22.2mm (#8 x 7/8")

Other Parts

1 x 9209440

84

ATTACH THIS WARNING & I.D. PLAQUE TO THIS LOCATION ON YOUR PLAY EQUIPMENT!

This provides warnings concerning safety and important contact information. A Tracking Number is provided to allow you to get critical information or order replacement parts for this specific model.

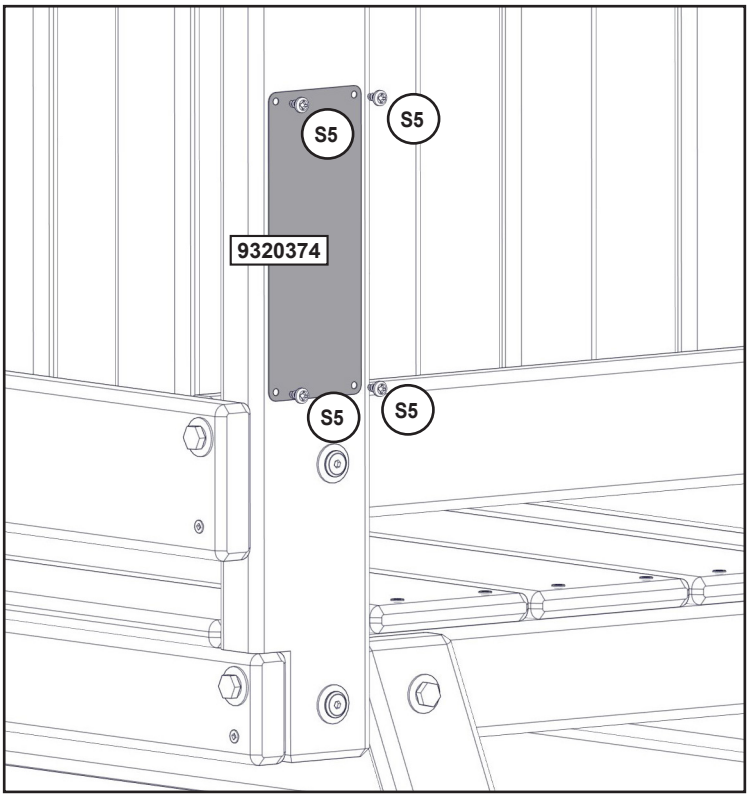



WARNING
AVERTISSEMENT

CONTINUOUS ADULT SUPERVISION REQUIRED!

STRANGULATION HAZARDS

Never allow children to play with ropes, clotheslines, pet leashes, cables, chains or cord-like items when using this playset or to attach these items to play-set.

Never allow children to wear loose fitting clothing, ponchos, hoods, scarves, capes, necklaces, or items with draw-strings, cords or ties when using this play-set.

Never allow children to wear bike or sport helmets when using this play-set.

Failure to prohibit these items increases the risk of serious injury and death to children from entanglement and strangulation.

SERIOUS HEAD INJURY HAZARD

Maintain shock absorbing material under and around play-set as recommended in the Installation & Operating Instructions. Installation over concrete, asphalt, dirt, grass, carpet and other hard surfaces creates a risk of serious injury or death from falls to the ground.

SURVEILLANCE CONSTANTE D'ADULTES REQUISE!

Risques d'étranglement

Ne jamais laisser les enfants jouer avec des cordes, cordes à linge, laisses pour animaux , des câbles,des chaînes ou ce type d'articles pendant l'utilisation de ce centre de jeu ou attacher un de ces éléments à la structure.

Ne jamais laissez les enfants porter des vêtements amples, des ponchos, des capuchons, des foulards, des capes, des colliers ou des articles avec cordons ou cordes libres pendant l'utilisation de ce centre de jeu.

Ne jamais laissez les enfants porter un casque de vélo ou de sport quand ils utilisent ce centre de jeu.

Ne pas respecter ces consignes augmente le risque de blessures graves ou de décès des enfants par enchevêtrement ou étranglement.

RISQUE DE BLESSURES GRAVES À LA TÊTE

Entretenir le matériau d'absorption des chocs sous et autour de la structure de jeu tel que recommandé dans les instructions d'installation. L'installation sur du béton, de l'asphalte, le sol, l'herbe, le tapie et autres surafces dures crée un risque de blessure à la tête grave ou mortelle en cas de chute.

THIS PRODUCT IS INTENDED FOR USE BY CHILDREN FROM AGES 3 TO 10; weight limit of 110 lbs. per child. Maximum number of users, Installation & Operating Instructions; other information is available at:

POUR LES ENFANTS DE 3 À 10 ANS D'ÂGE; limite de 110 Livres par enfant. Nombre maximum d' utilisateurs, installation et d'utilisation; d'autres informations sont disponibles sur:

www.KidKraft.com
Contact us at: KidKraft
Dallas, TX 75244 USA
1-800-933-0771

Tracking Number:
Numéro de Suivi:

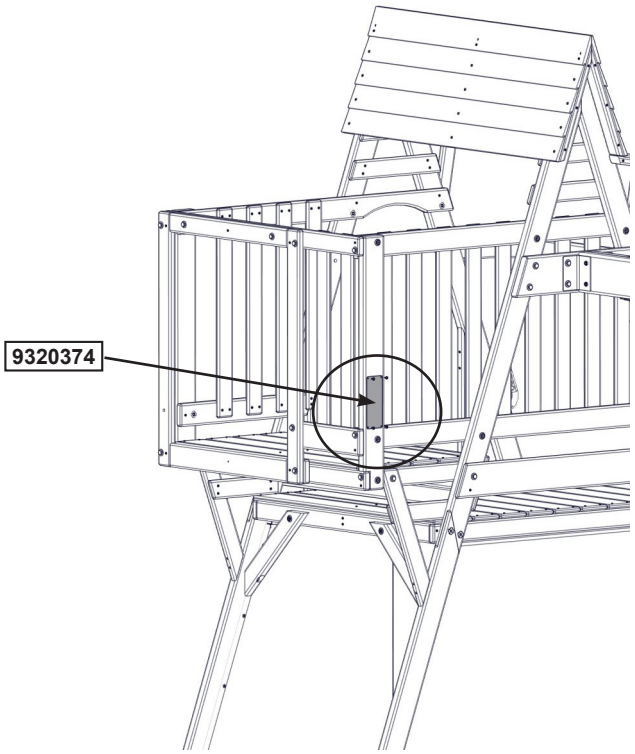

Hardware

4 x (S5) #8 x 12.7mm(#8 x 1/2")

Other Parts

1 x 9320374

europecustomerservice@kidkraft.com
+31 20 305 8620
M-F from 09:00 to 17:30 (GMT+1)

parts.kidkraft.eu

85

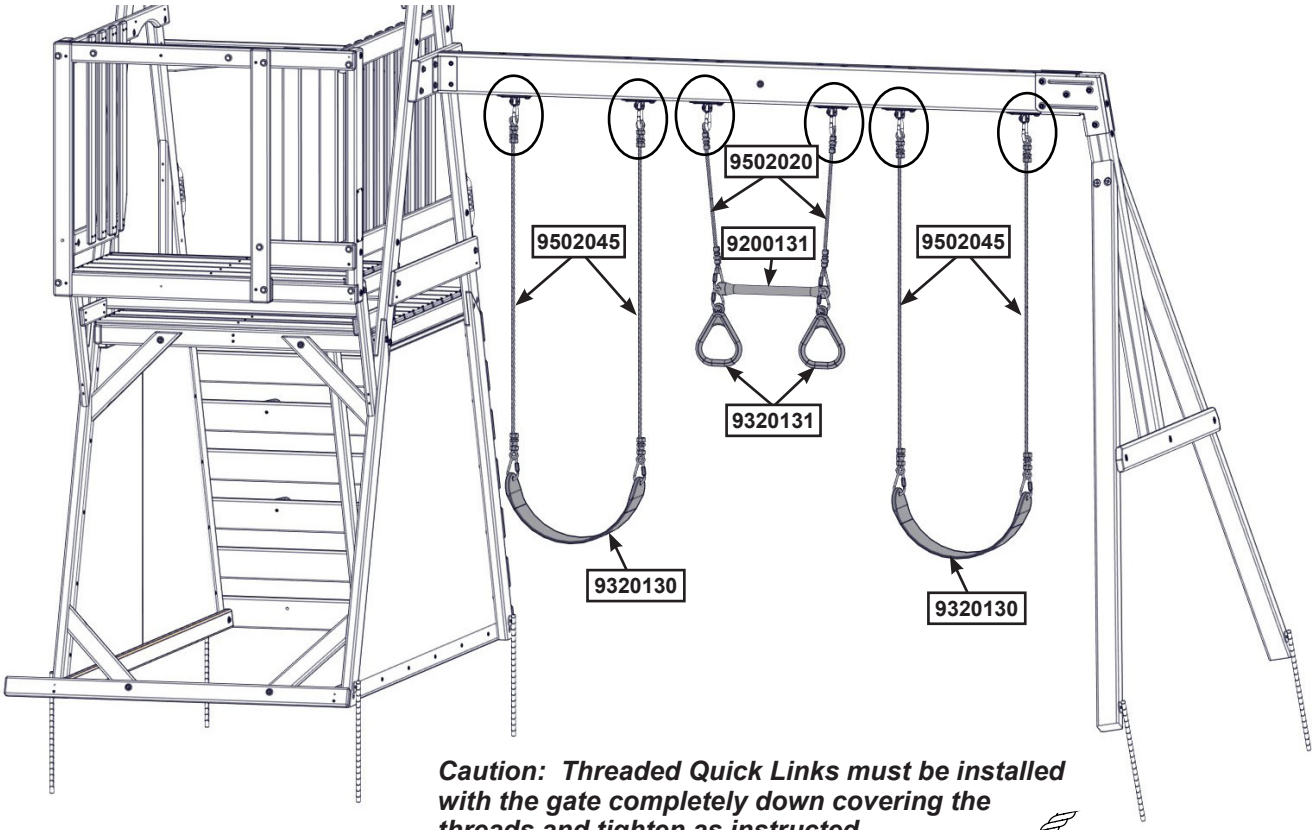

Caution: Threaded Quick Links must be installed with the gate completely down covering the threads and tighten as instructed.

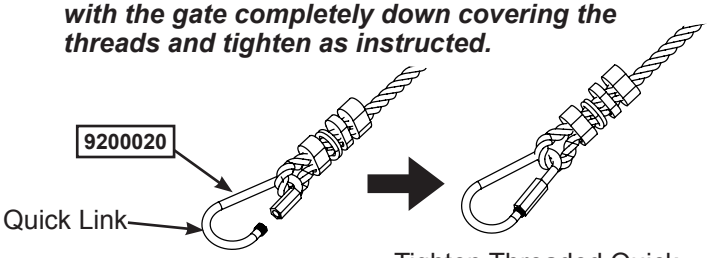

Threaded Quick Links attach to seat.

Tighten Threaded Quick Link using adjustable wrench

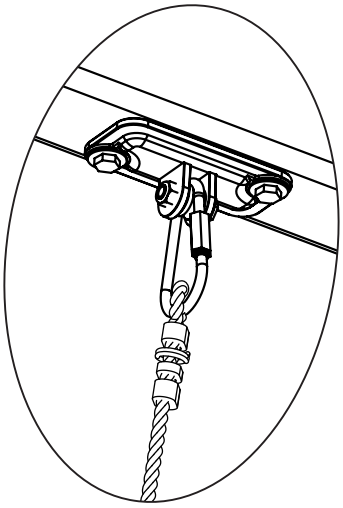

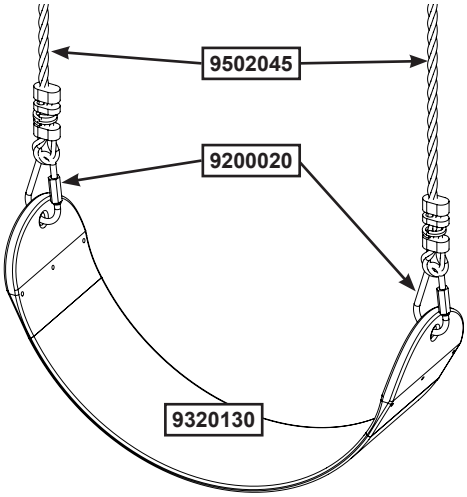

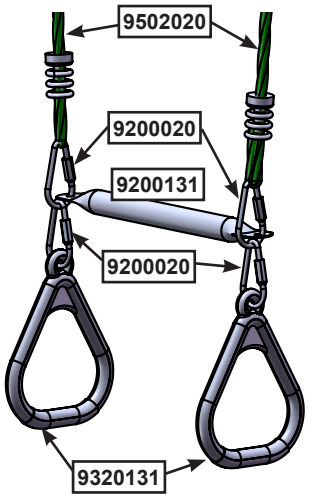

Other Parts

2 x	9320130	4 x	9502045	1 x	9200131
2 x	9320131	2 x	9502020	8 x	9200020

86 **Note: Structure partly removed for clarity.**

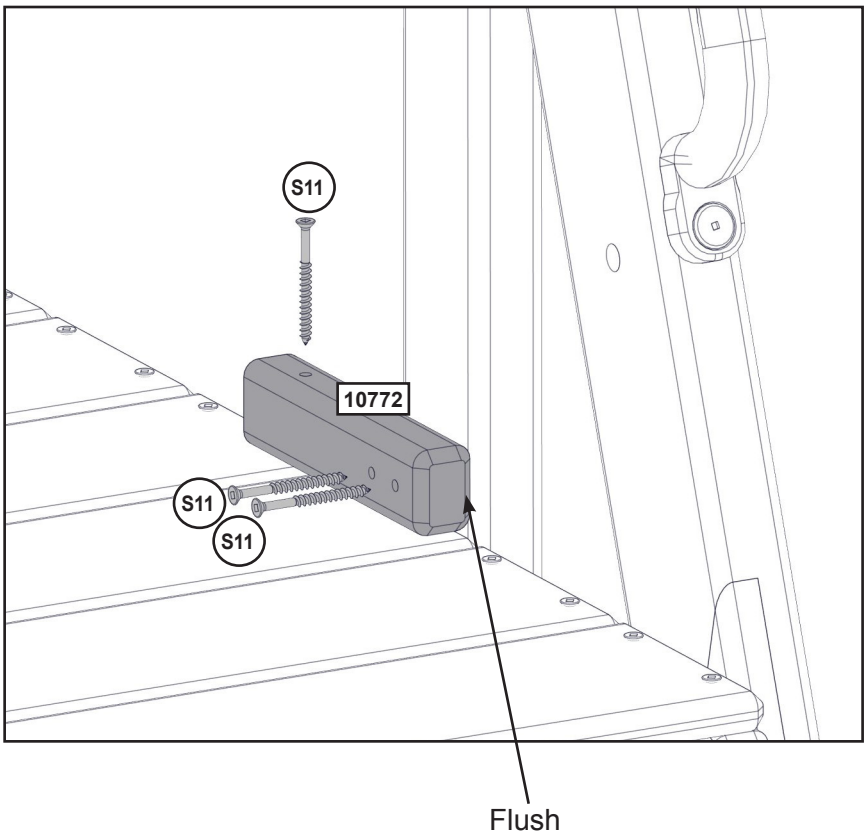

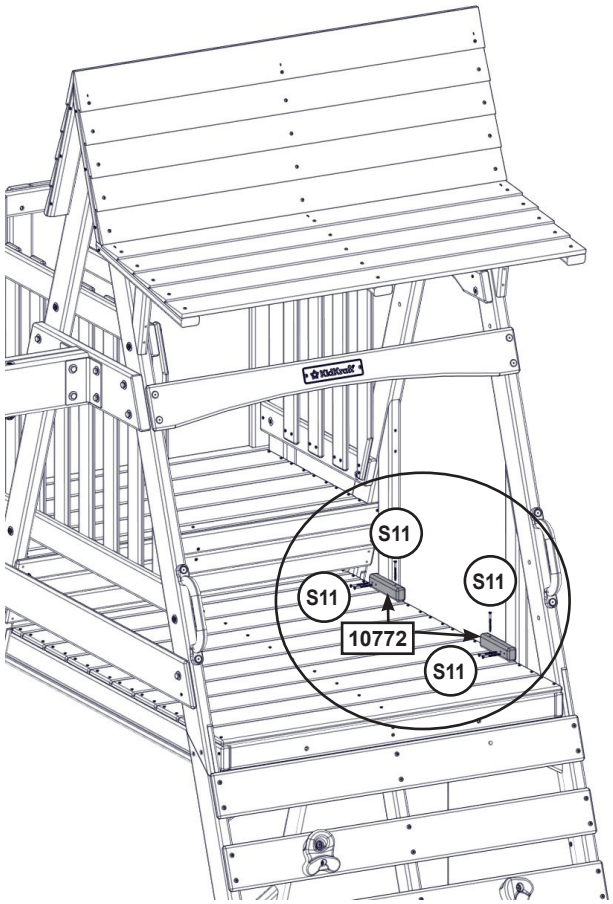

Wood Parts

2 x [10772] 25.4 x 34.9 x 147 mm (1" x 1 3/8" x 5 13/16")

Hardware

6 x (S11) #8 x 50.8mm (#8 x 2")

europecustomerservice@kidkraft.com
+31 20 305 8620
M-F from 09:00 to 17:30 (GMT+1)

parts.kidkraft.eu

87



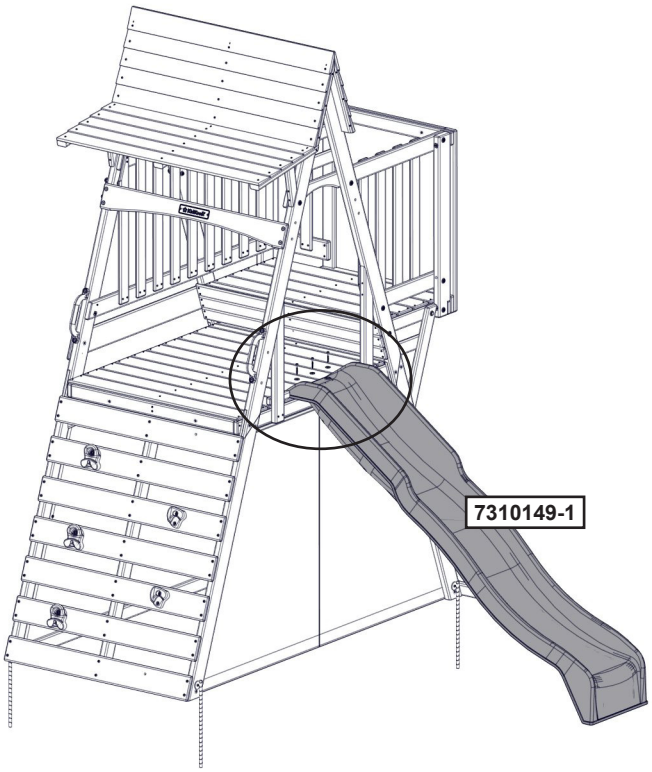

Note: Pre-drill all holes using a 1/8” drill bit before installing the pan screws.

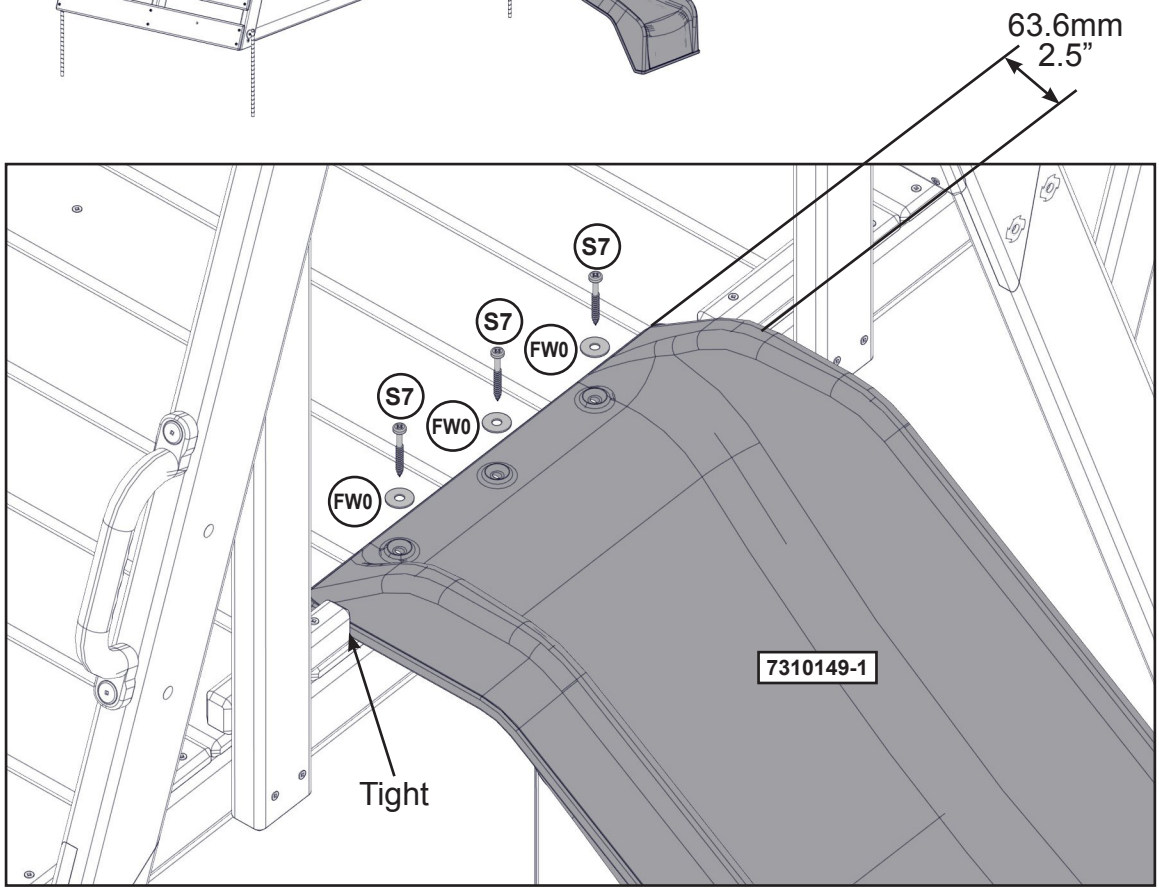

Hardware

3 x S7 #12 x 2” (50.8 mm)

3 x FW0

Other Parts

1 x 7310149-1

88

Complete this step 4 times

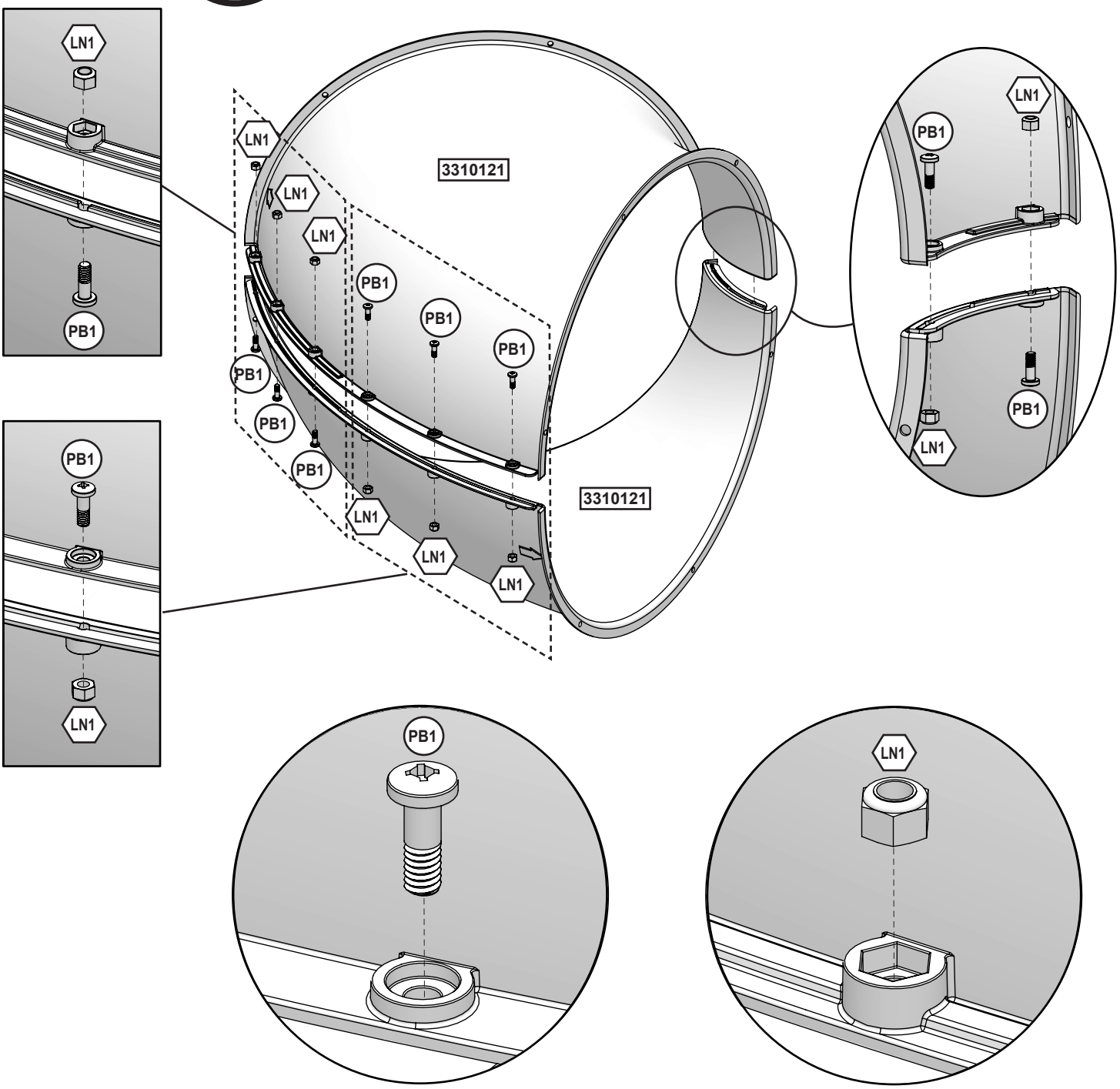

Hardware

32 x (PB1) 6.3mm x 19 mm (1/4 x 3/4") (LN1)

Other Parts

8 x 3310121

europecustomerservice@kidkraft.com
+31 20 305 8620
M-F from 09:00 to 17:30 (GMT+1)

parts.kidkraft.eu

89

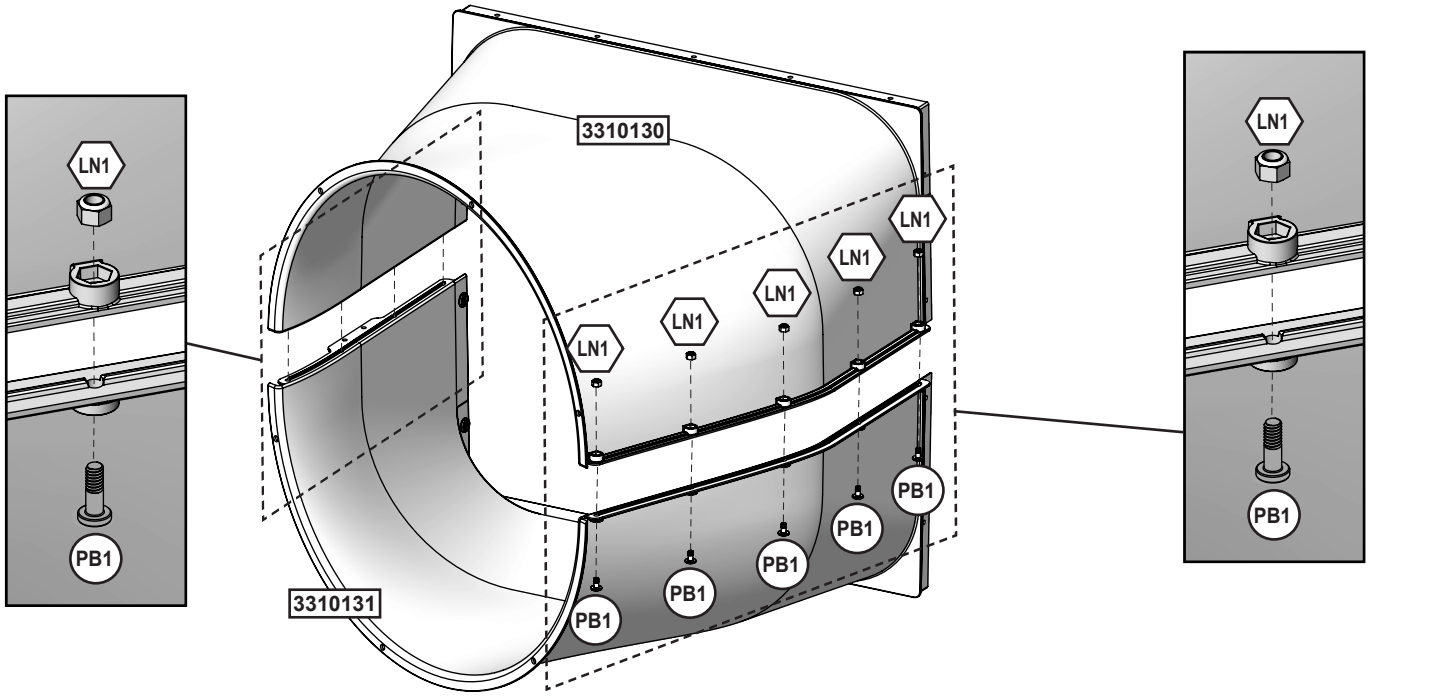

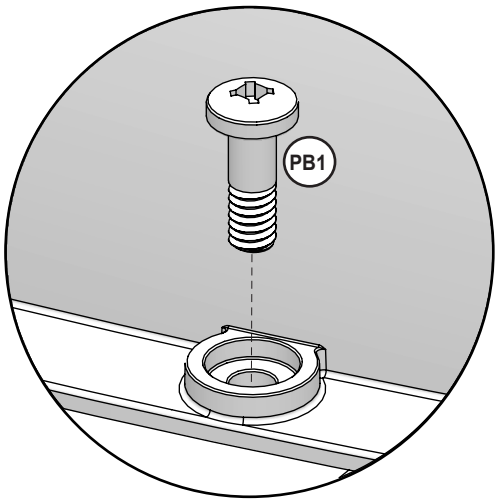

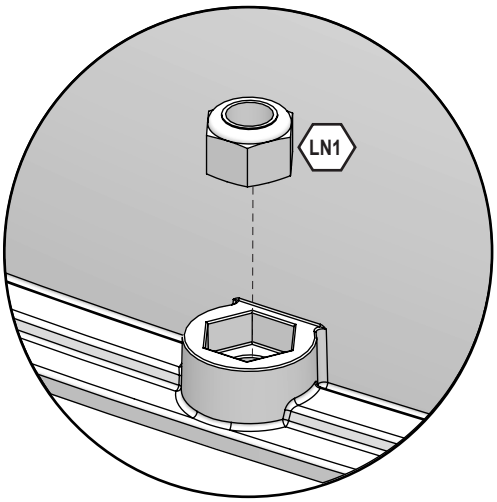

Hardware

9 x (PB1) 6.3mm x 19 mm (1/4 x 3/4") (LN1)

Other Parts

1 x 3310130
1 x 3310131

90

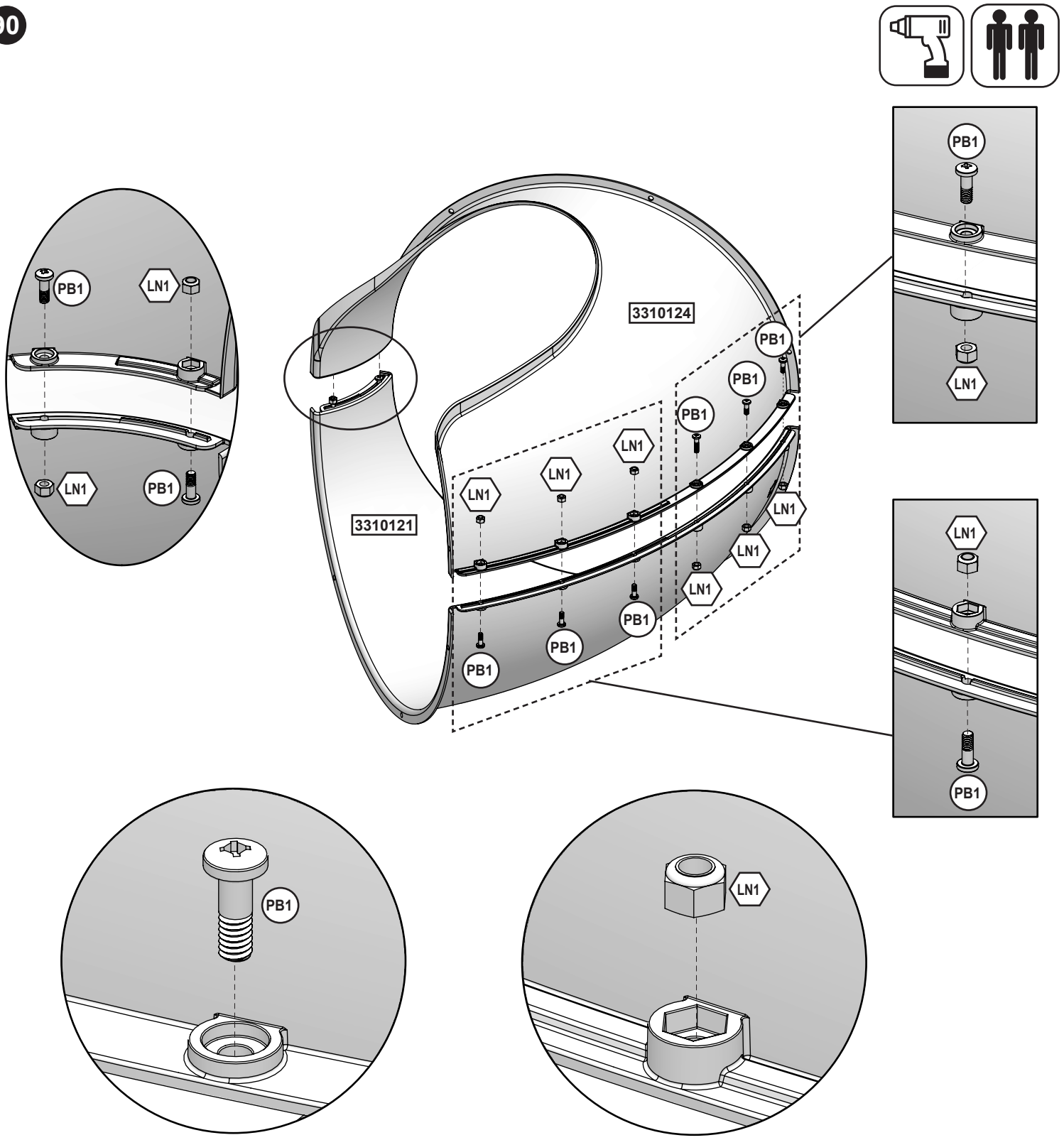

Hardware

8 x (PB1) 6.3mm x 19 mm (1/4 x 3/4") (LN1)

Other Parts

1 x 3310124

1 x 3310121

europecustomerservice@kidkraft.com
+31 20 305 8620
M-F from 09:00 to 17:30 (GMT+1)

parts.kidkraft.eu

91

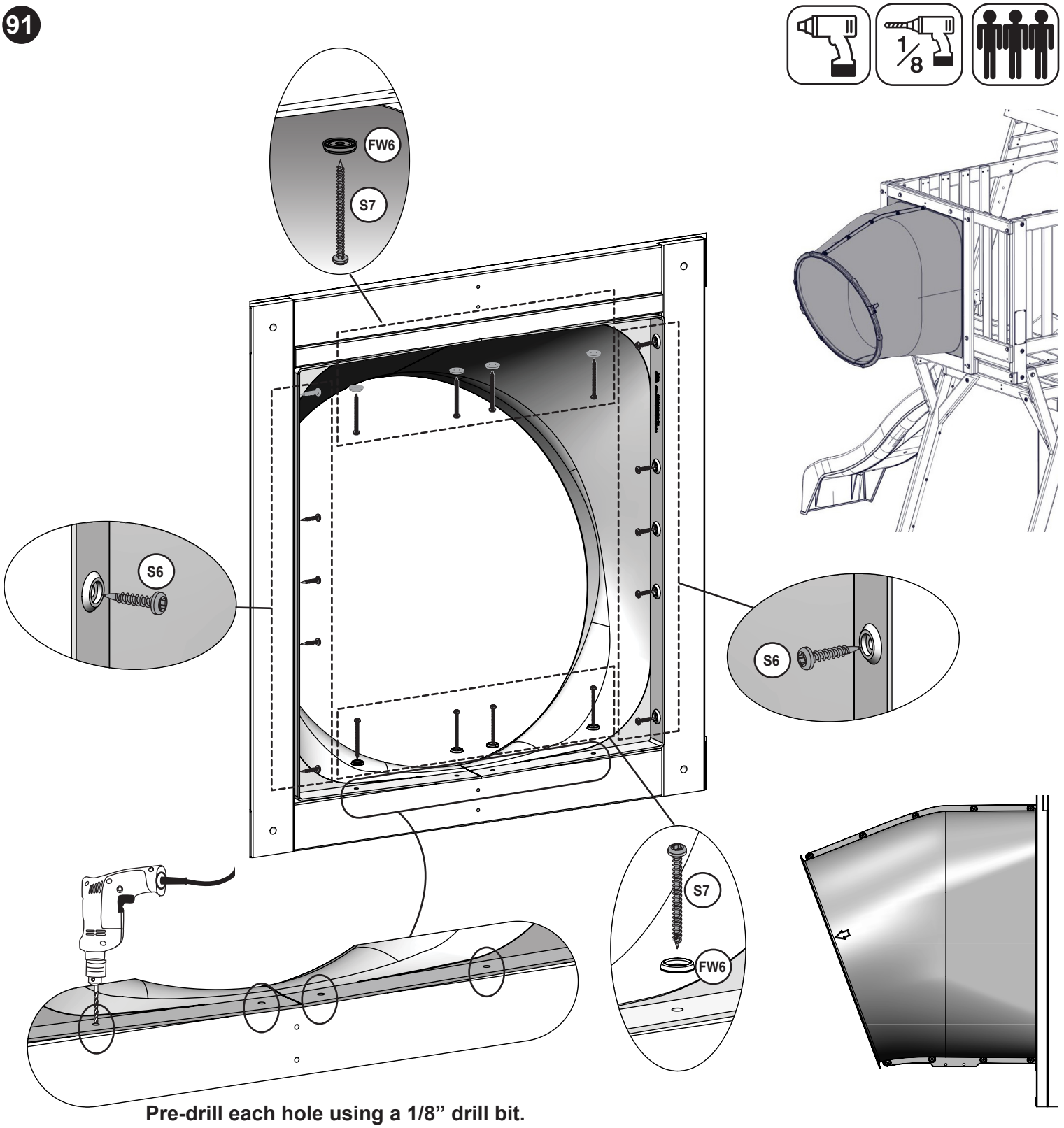

Pre-drill each hole using a 1/8” drill bit.
Making sure the pre-drilled holes are a minimum of 1” deep.

Hardware

10 x (S6) #12 x 25.4mm (#12 x 1”)
8 x (S7) #12 x 50.8mm (#12 x 2”)
8 x (FW6) #12

92 **Note: Keep all bolts loose until further step.**

Use Quadrex Driver as a guide pin for each hole before inserting bolt.

Align each elbow using the molded arrows.

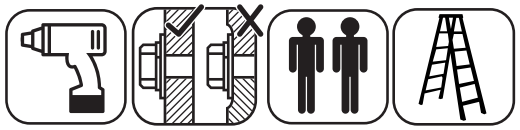

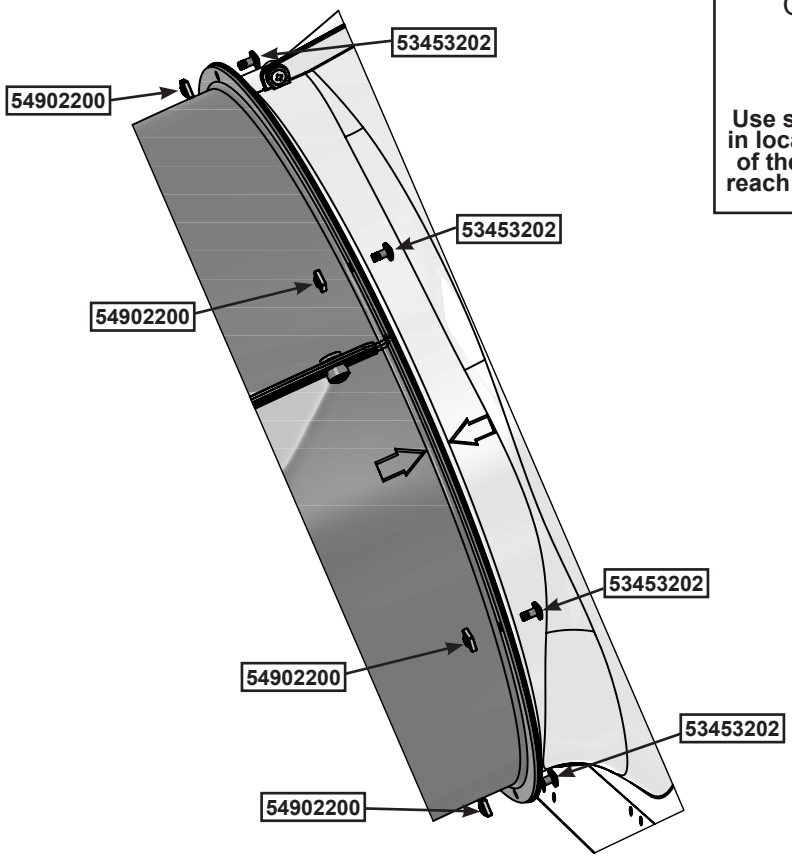

Quadrex Driver



Use special driver provided in locations where the curve of the elbow are difficult to reach with a standard driver.

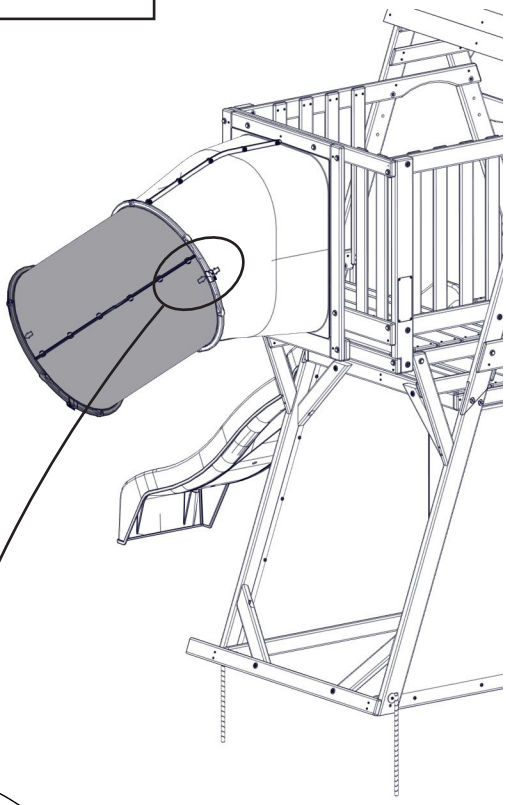

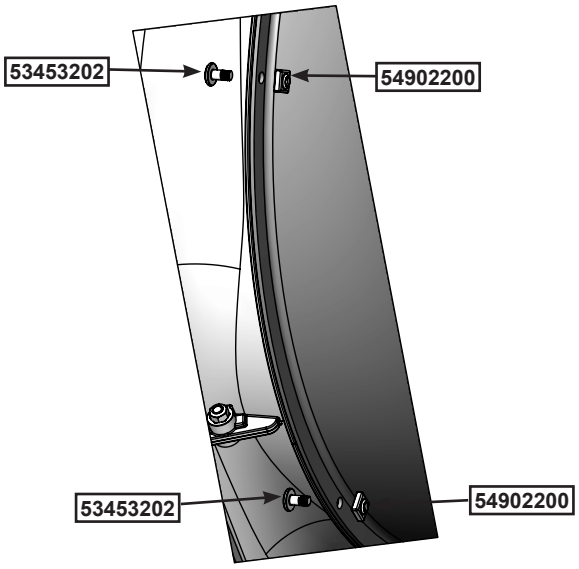

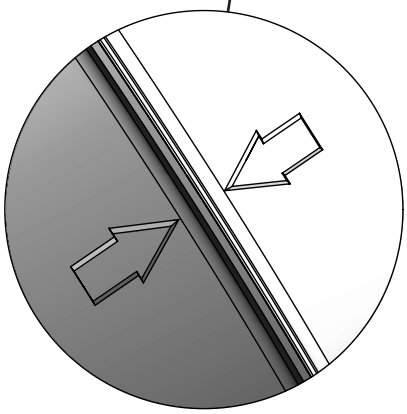

Align each elbow using the molded arrows.

Other Parts

6 x 54902200

6 x 53453202 1/4" x 12.7mm

93

Complete this three times

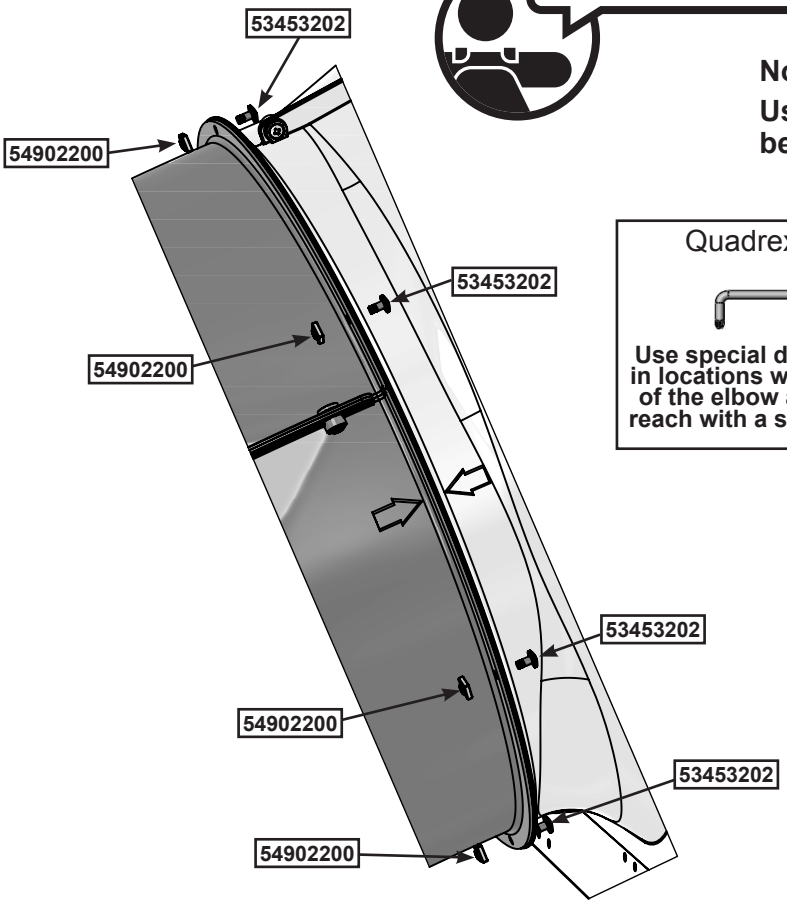

Note: Keep all bolts loose until further step.

Use Quadrex Driver as a guide pin for each hole before inserting bolt.

Quadrex Driver



Use special driver provided in locations where the curve of the elbow are difficult to reach with a standard driver.

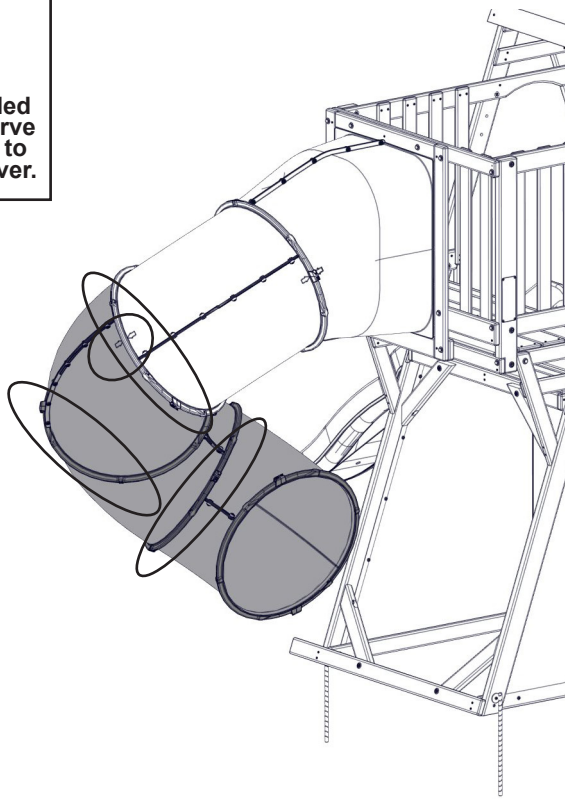

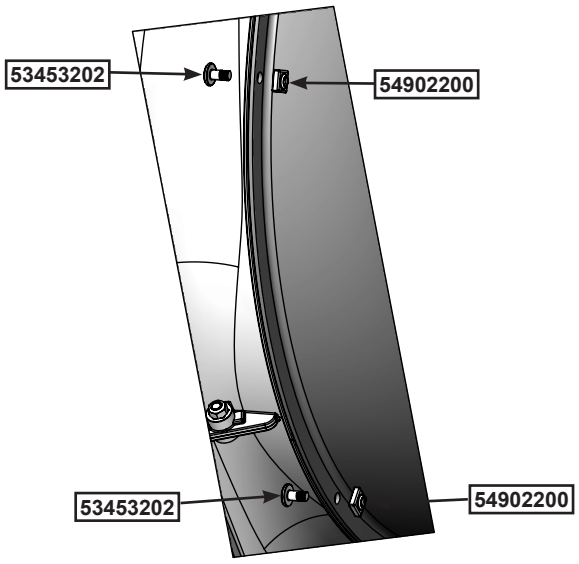

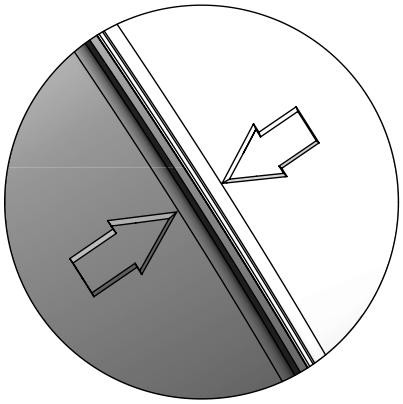

Align each elbow using the molded arrows.

Other Parts

18 x 54902200

18 x 53453202 1/4" x 12.7mm

94

Use a 7/16” open end wrench to hold nut and then tighten bolt with Quadrex Driver.

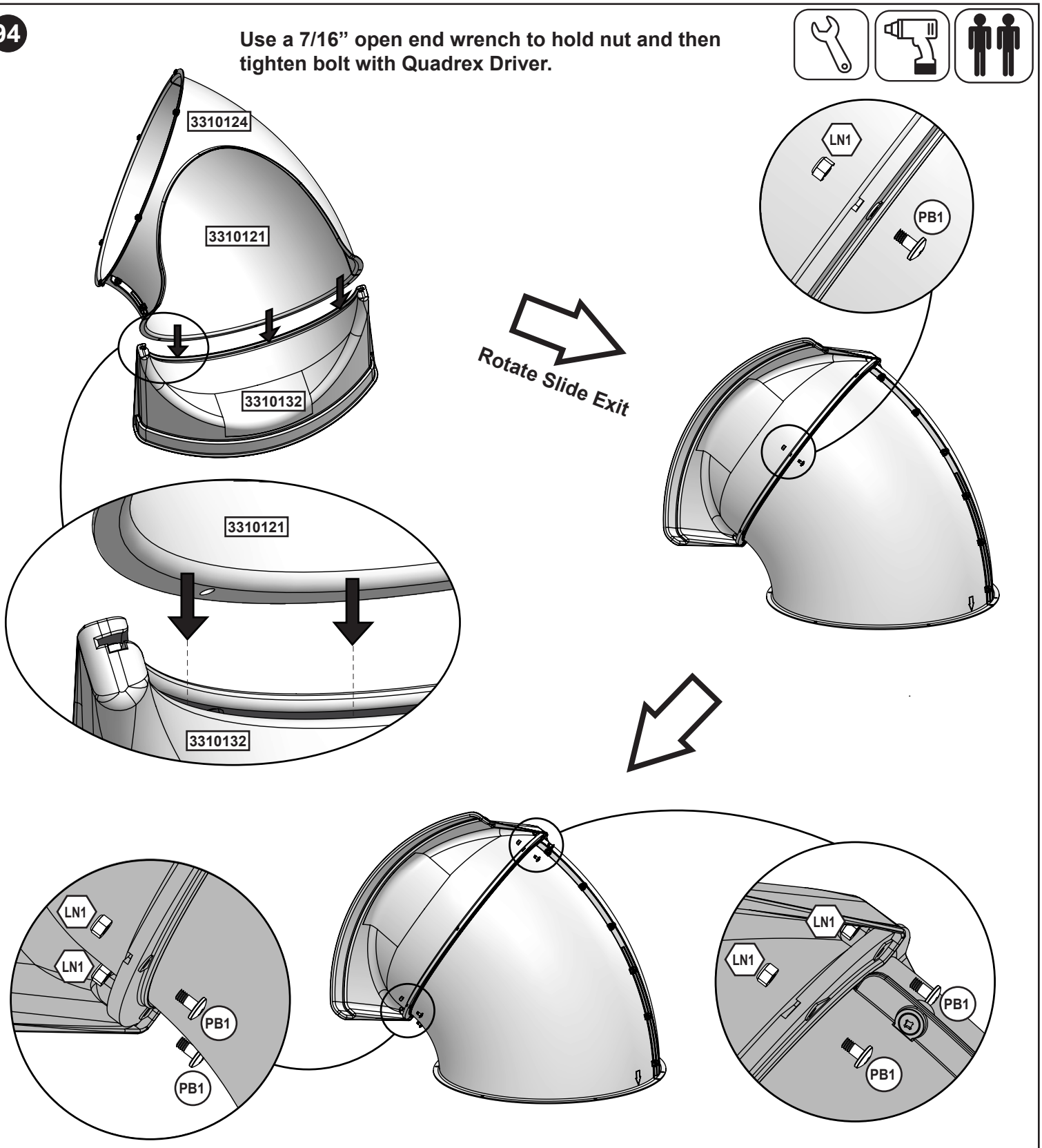

Hardware

5 x (PB1) 6.4mm x 19 mm (1/4 x 3/4”) (LN1)

Other Parts

1 x 3310132

europecustomerservice@kidkraft.com
+31 20 305 8620
M-F from 09:00 to 17:30 (GMT+1)

parts.kidkraft.eu

95 **Tighten all slide bolts before the clamp rings go on in the next step.**

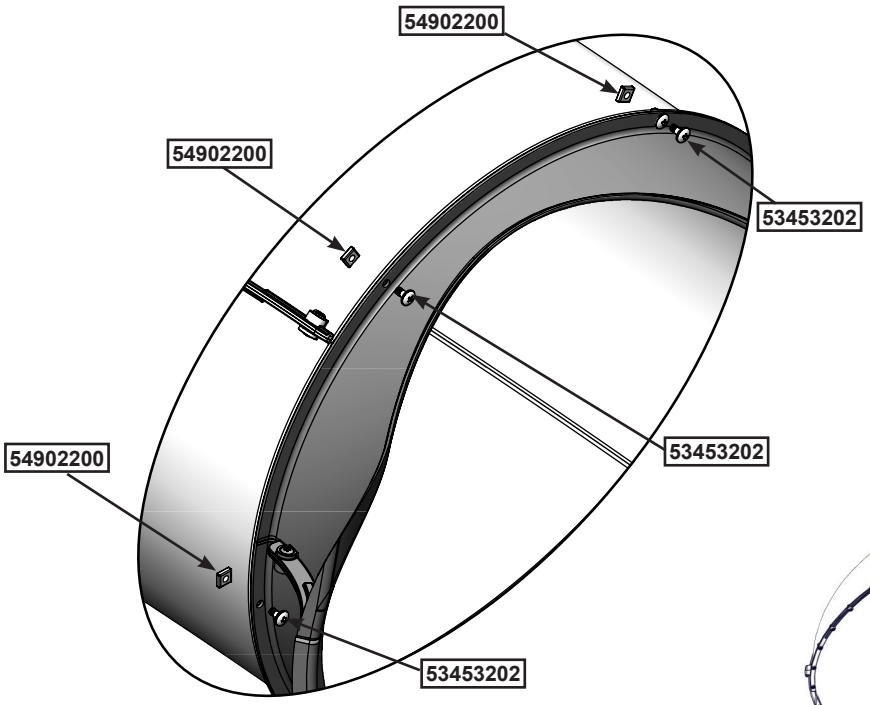

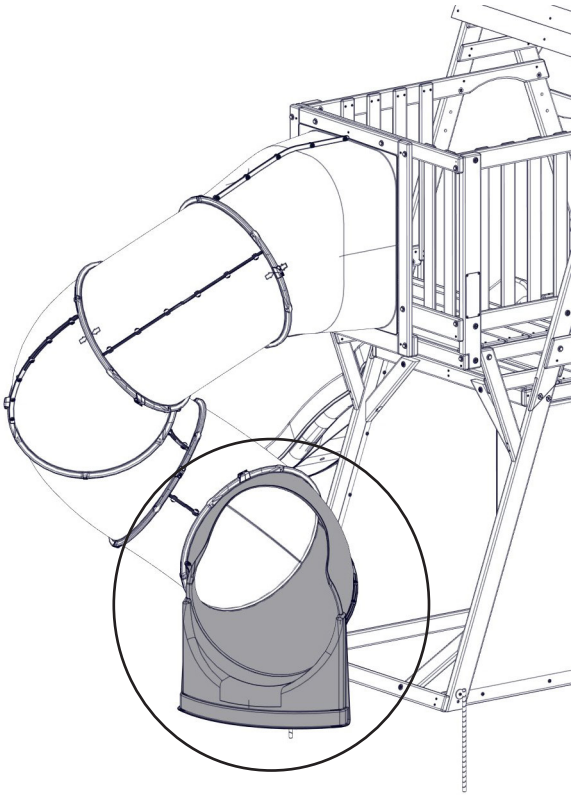

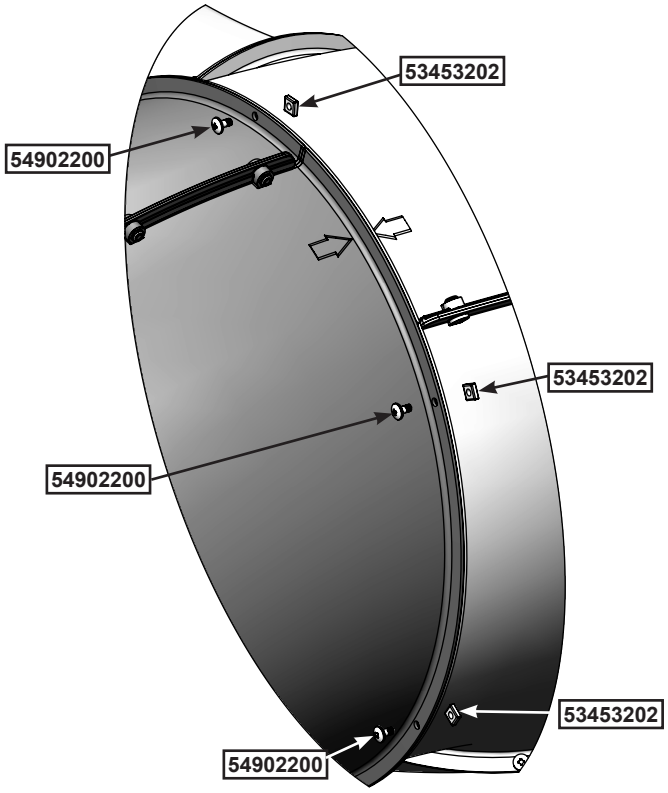

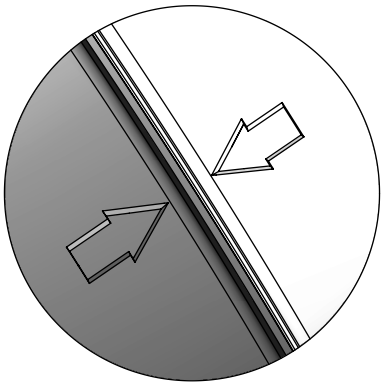

Align each elbow using the molded arrows.

Other Parts

6 x 54902200

6 x 53453202 1/4" x 12.7mm

96

Warning. Do not over tighten the clamp rings.

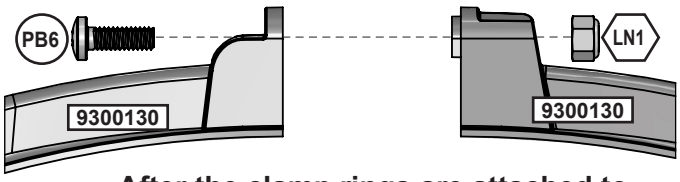

After the clamp rings are attached to the elbows, fasten them end to end with two pan bolts and lock nuts

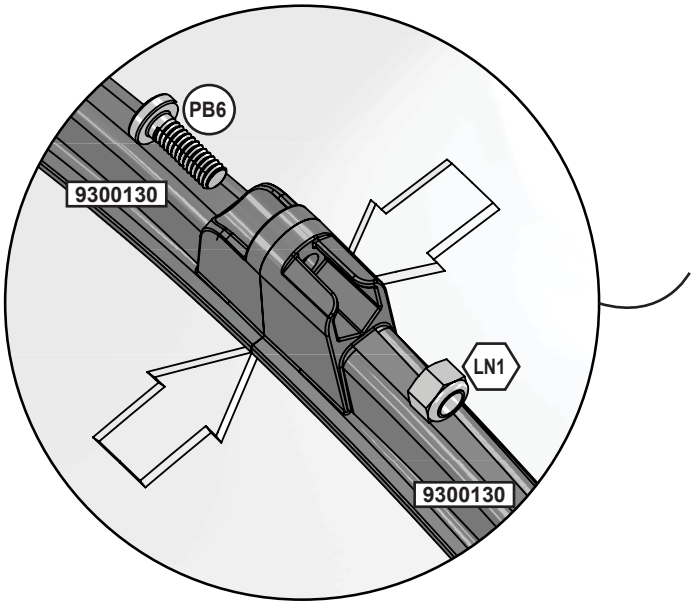

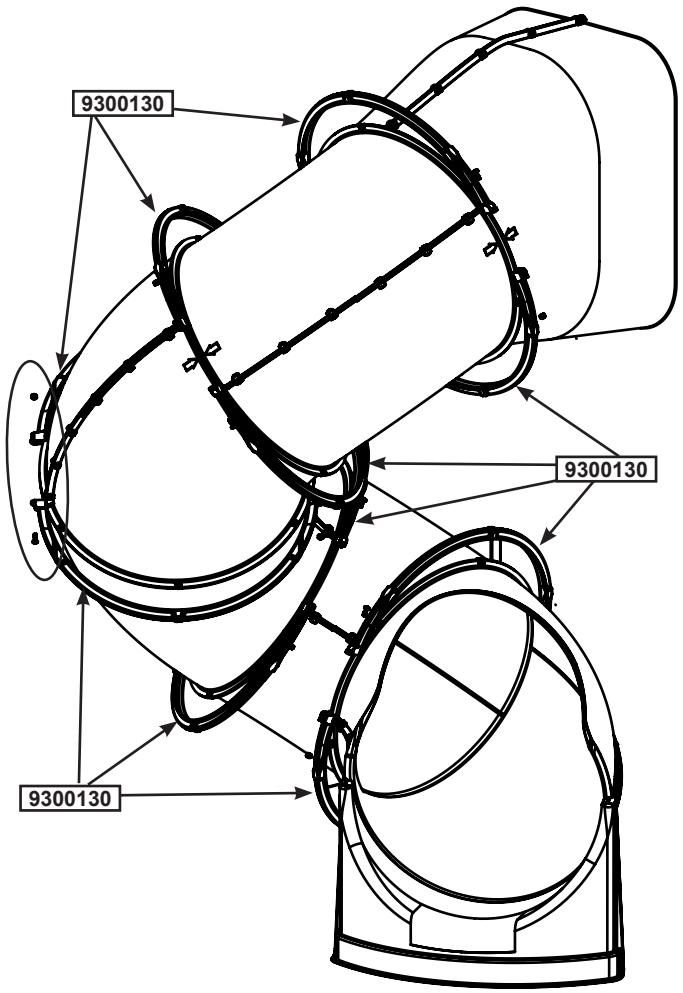

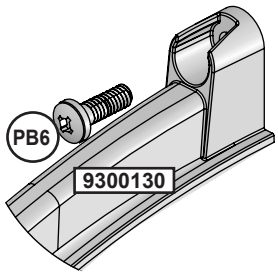

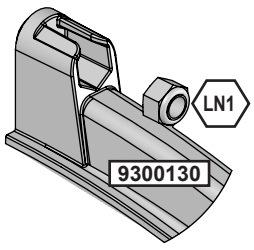

Note: For ease of assembly bottom set of clamp rings can be rotated 90 degrees to install bolts.

Hardware

10 x (PB6) 6.4mm x 25.4 mm (1/4 x 1") (LN1)

Other Parts

10 x 9300130

europecustomerservice@kidkraft.com
+31 20 305 8620
M-F from 09:00 to 17:30 (GMT+1)

parts.kidkraft.eu

97

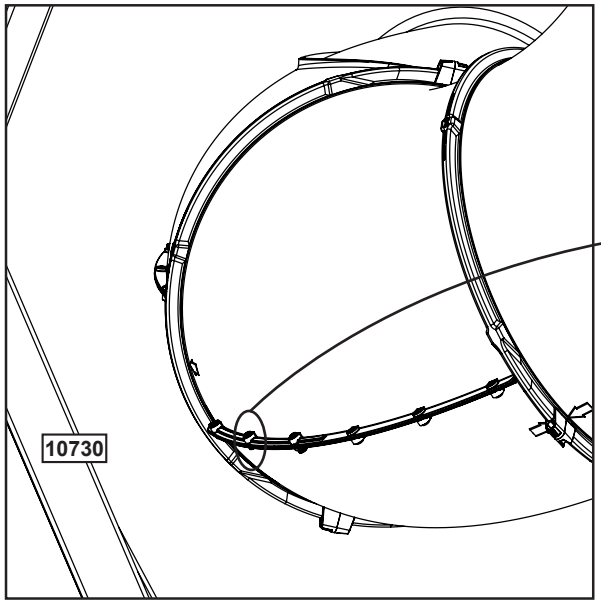

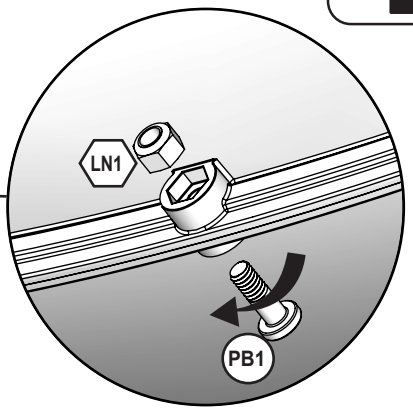

Remove PB1 (1/4 x 3/4” Pan Bolt), The bolt (PB1) will no longer be needed, but keep the lock nut (LN1)

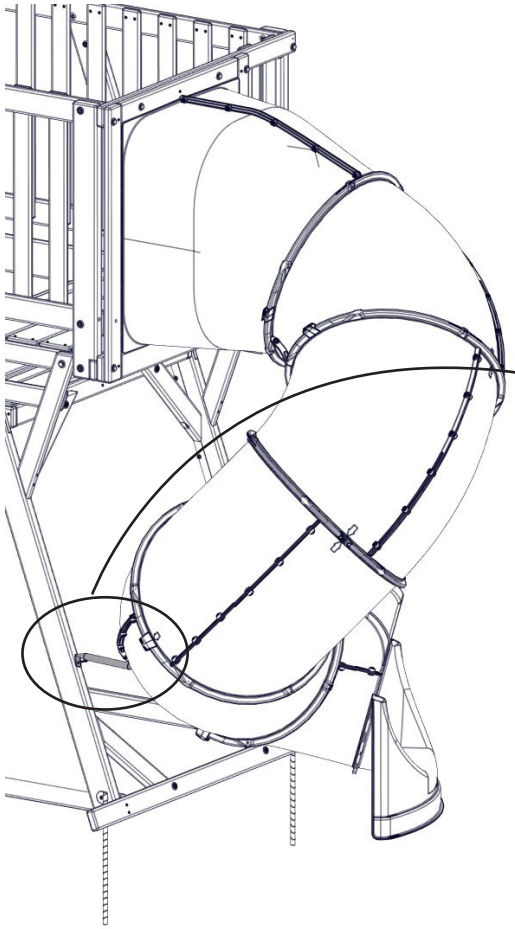

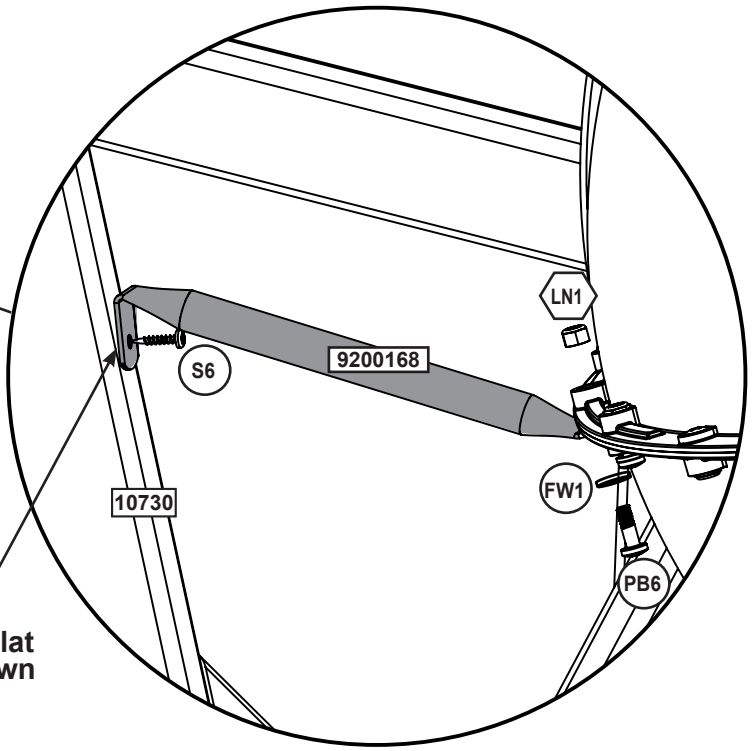

Note: Flat end down

Install PB6 (1/4 x 1” Pan Bolt) with flat washer (FW1)

Hardware

1 x (PB6) 1/4 x 1” (6.4 x 25.4 mm) (FW1)

1 x (S6) #12 x 1” (#12 x 25.4 mm)

Other Parts

1 x 9200168

98

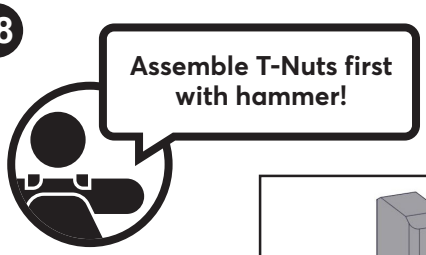



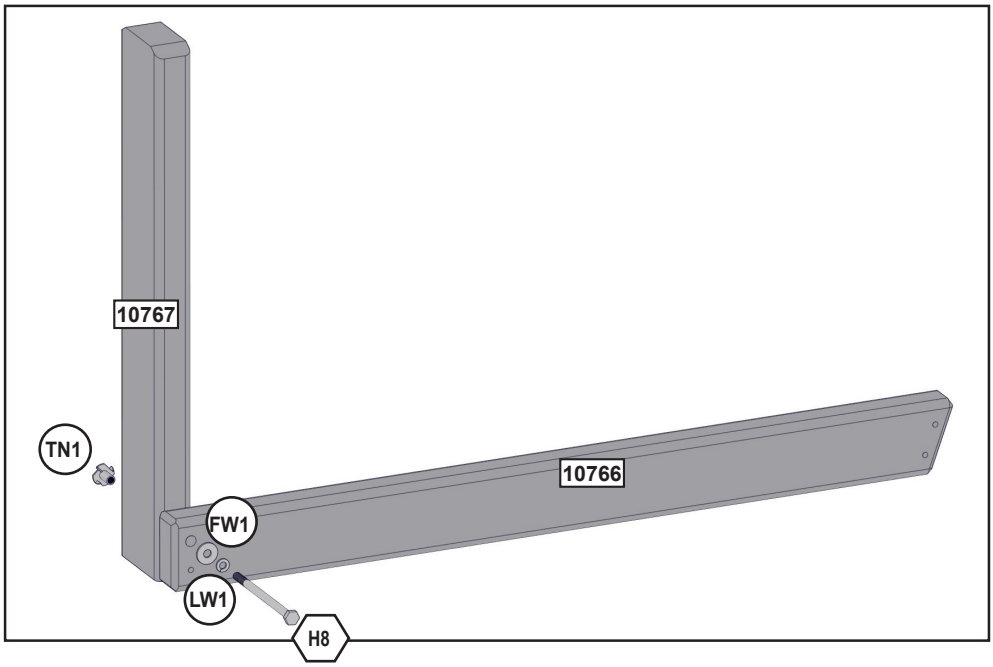

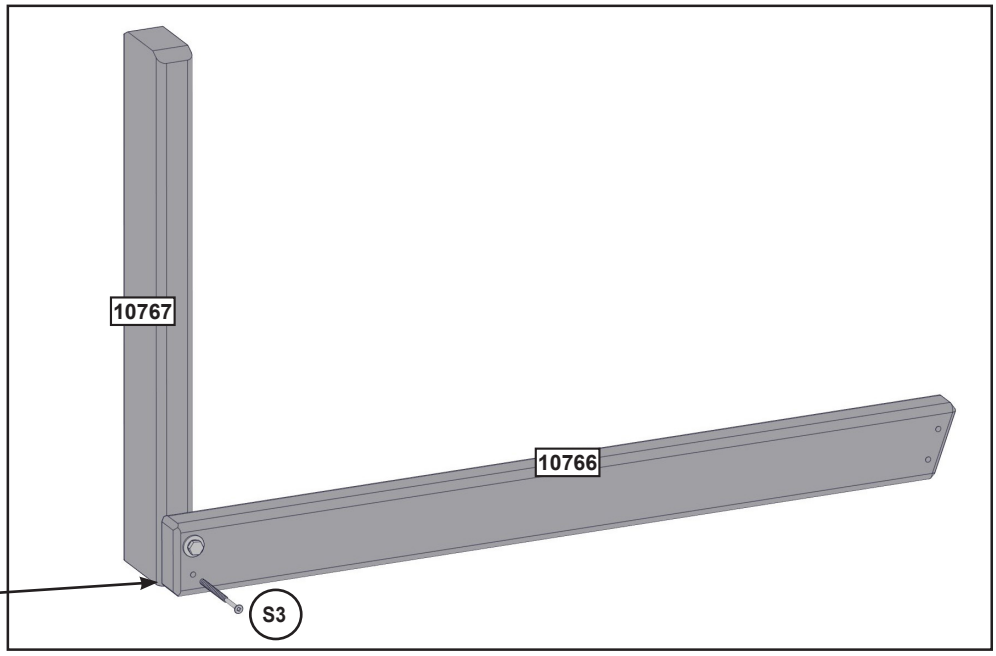

Wood Parts

1 x 10766 31.8 x 63.5 x 710 mm (1 1/4'' x 2 1/2'' x 27 15/16'')
1 x 10767 31.8 x 76.2 x 465 mm (1 1/4'' x 3'' x 18 5/16')

Hardware

1 x S3 #8 x 63.5mm (#8 x 2-1/2'')
1 x H8 6.4mm x 108mm (1/4 x 4-1/4'')(FW1, LW1, TN1)

99

Note: Structure partly removed for clarity.

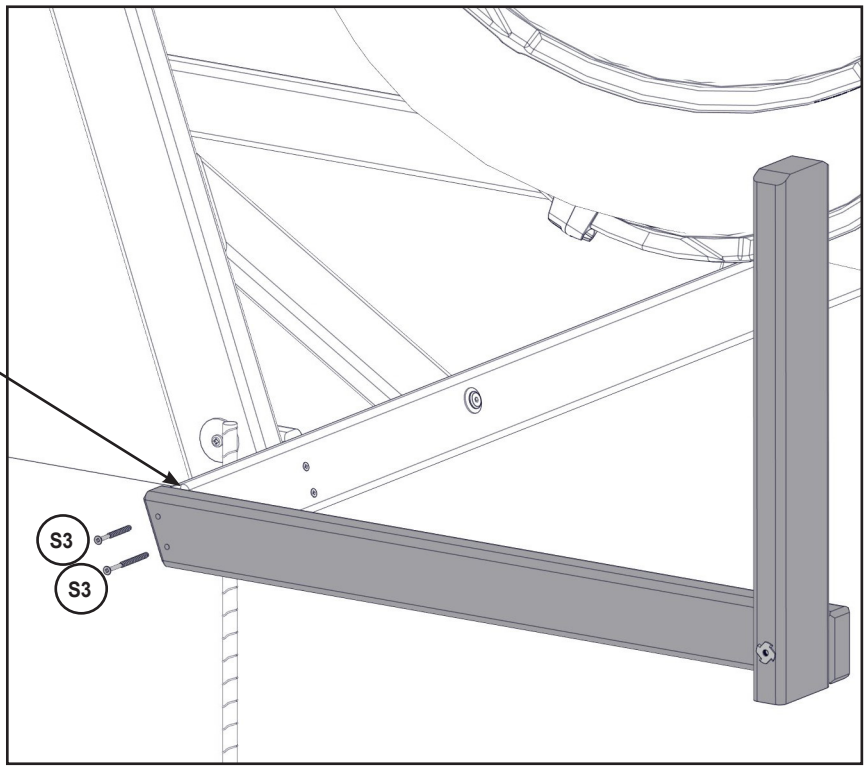

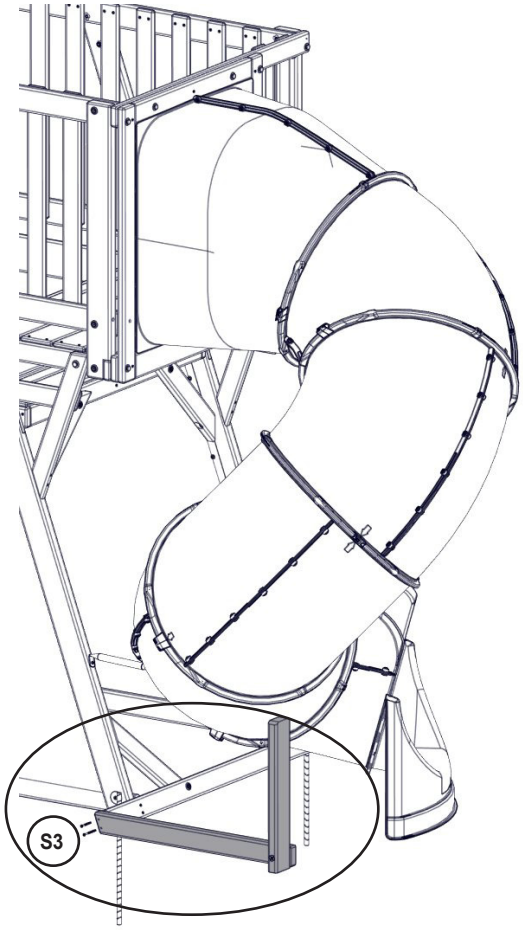

Hardware

2 x (S3) #8 x 63.5mm (#8 x 2-1/2")

100



Note: Structure partly removed for clarity.

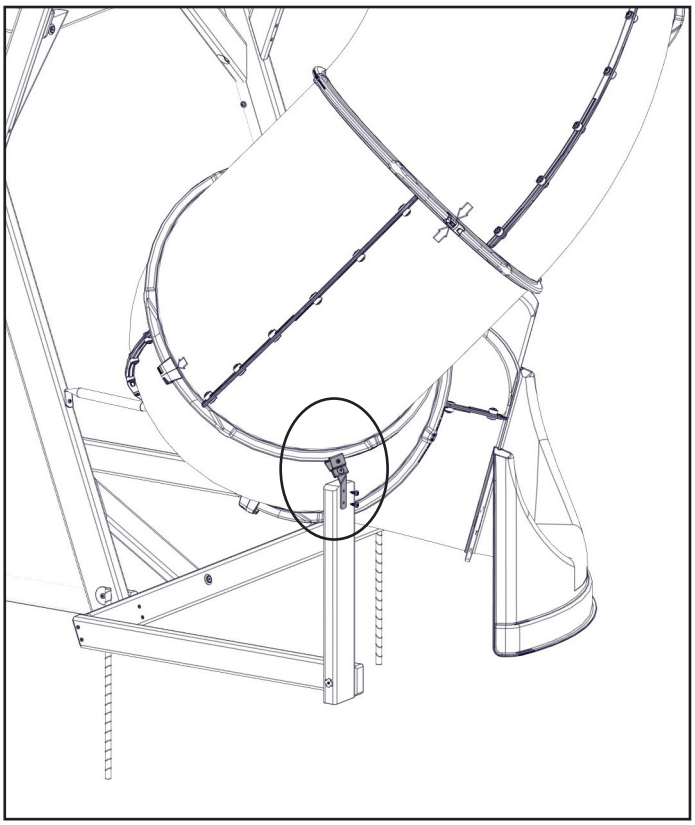

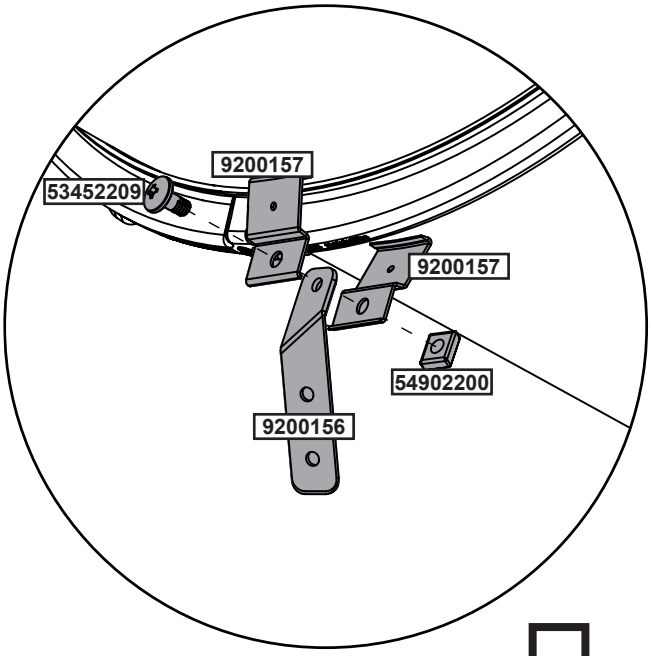

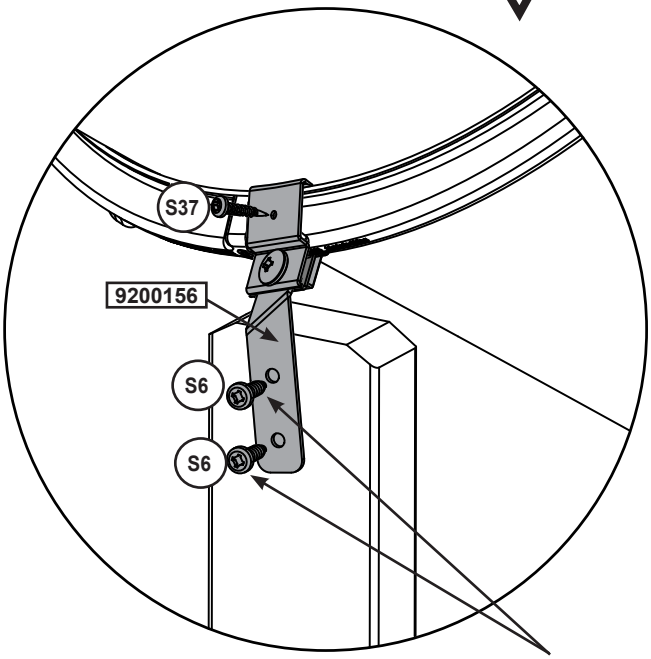

Pre-drill with a 1/8” drill bit.

Hardware

1 x (S37) #7 x 15.87mm (#7 x 5/8”)

2 x (S6) #12 x 25.4mm (#12 x 1”)

Other Parts

1 x [54902200] 2 x [9200157]

1 x [9200156] 1 x [53452209] 1/4 x 14.5mm

europecustomerservice@kidkraft.com
+31 20 305 8620
M-F from 09:00 to 17:30 (GMT+1)

parts.kidkraft.eu

MISSING SOMETHING? CALL US OR GO ONLINE

101



Note: Structure partly removed for clarity.

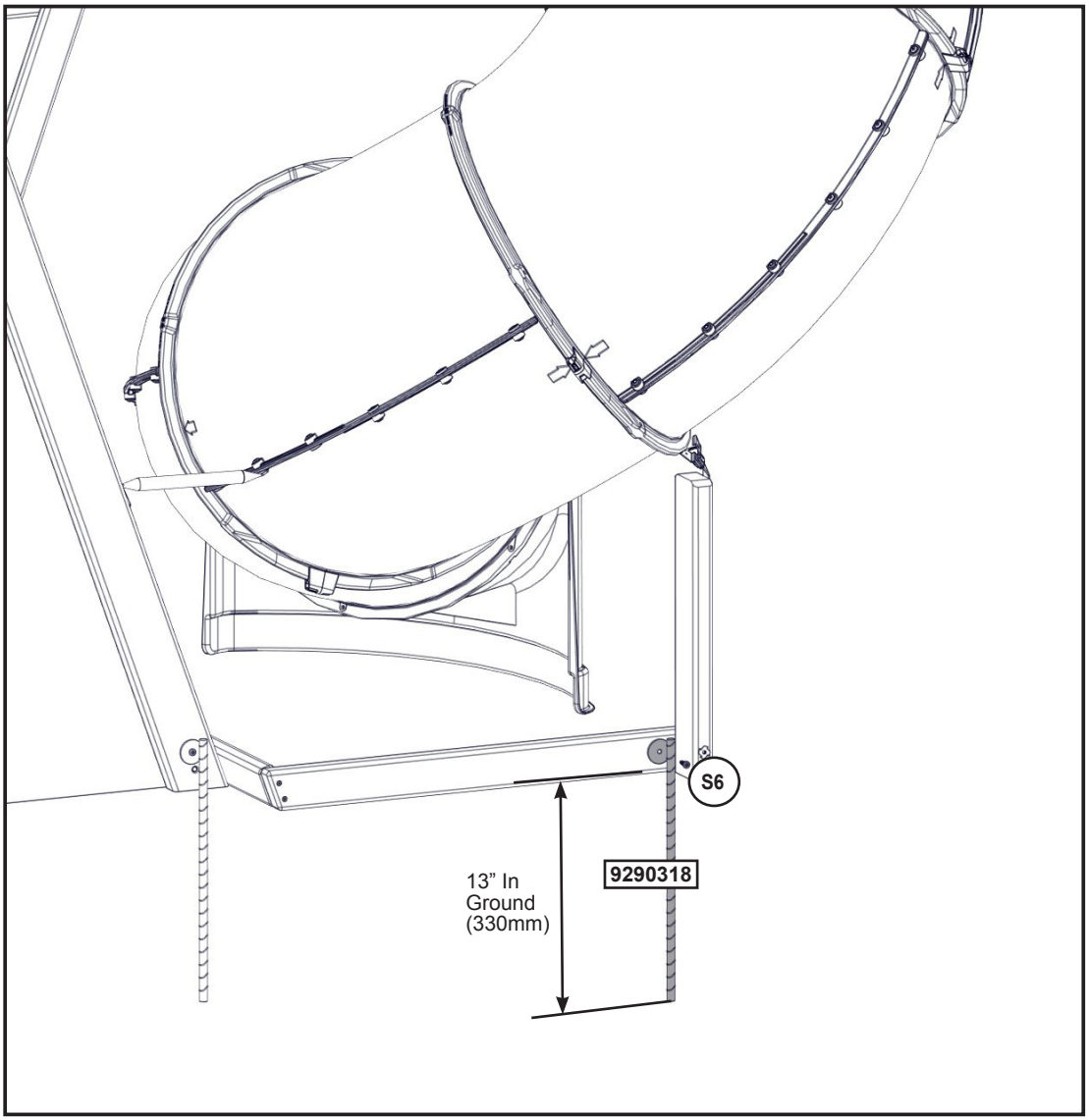

Warning! To prevent tipping and avoid potential injury, stakes must be driven 13”(330mm) into ground. Digging or driving stakes can be dangerous if you do not check first for underground wiring, cables or gas lines.

Hardware

1 x (S6) #12 x 25.4mm (#12 x 1”)

Other Parts

1 x 9290318

102

Note: Structure partly removed for clarity.

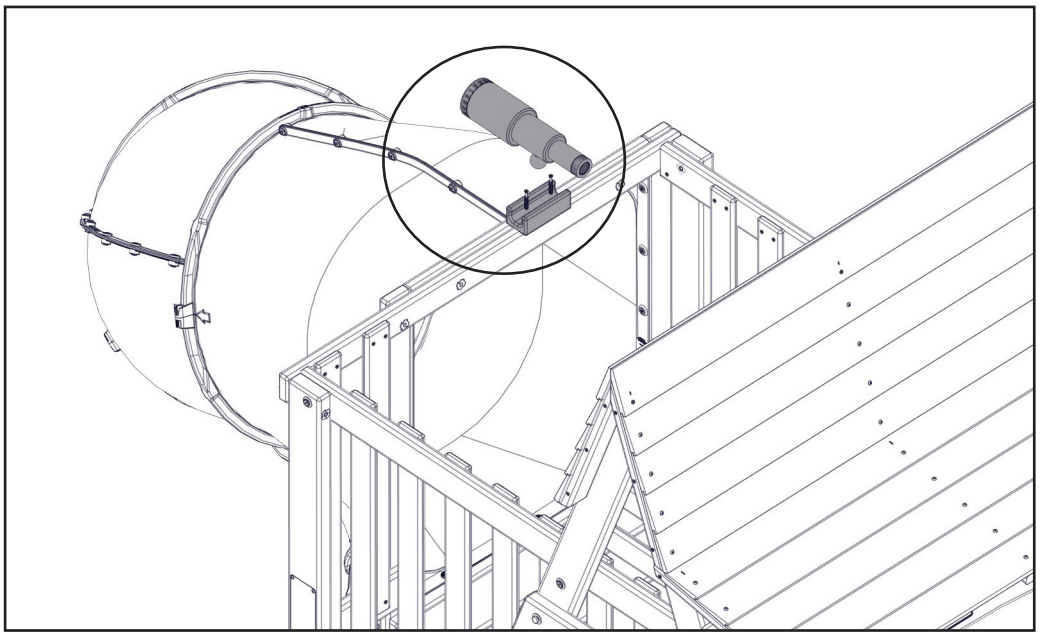

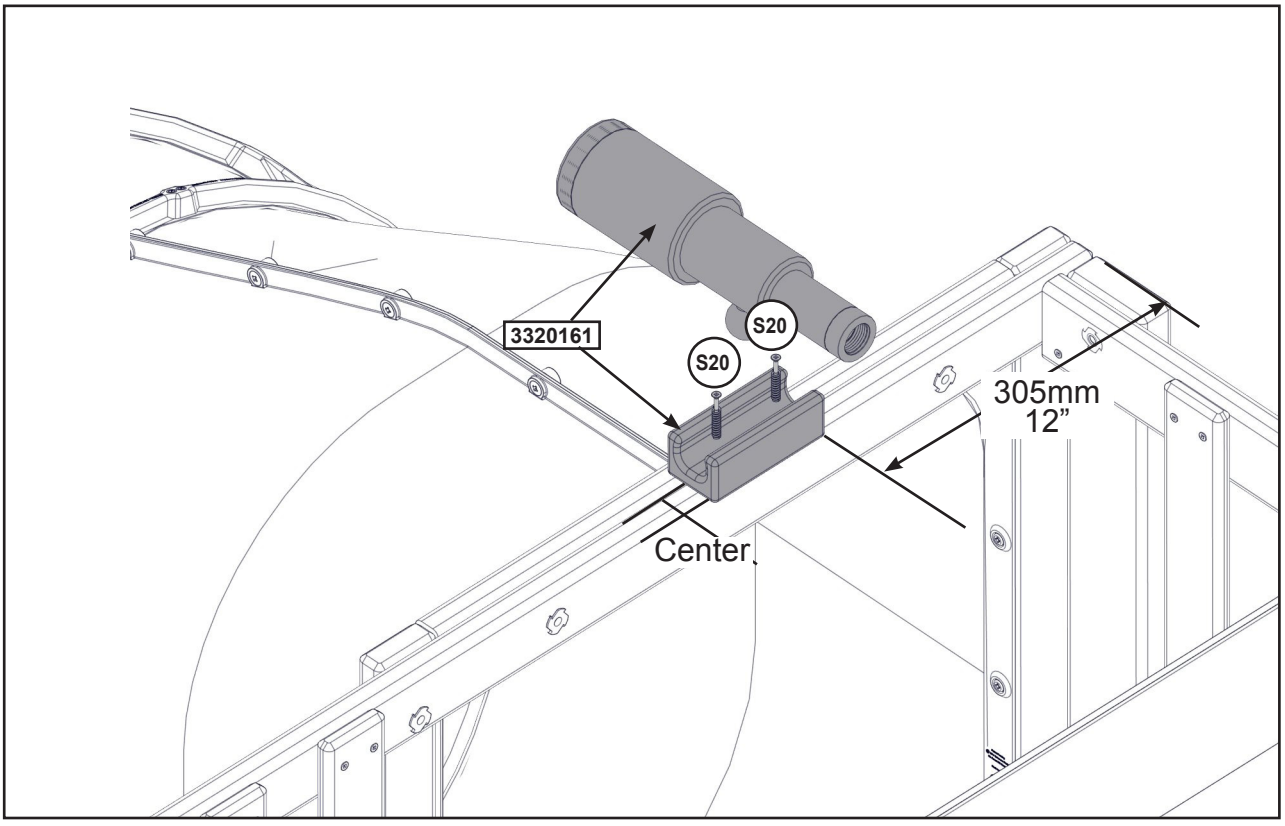

Hardware

2 x (S20) #8 x 34.9mm (#8 x 1-3/8”)

Other Parts

1 x 3320161

3 EASY WAYS TO REGISTER YOUR PRODUCT 24/7

1) Scan this QR Code with your smart phone to complete your product registration directly from your phone:

2) Complete the registration online at: https://www.kidkraft.com/us_en/warranty/

3) Mail this completed form to: KidKraft Inc., 4630 Olin Road, Dallas, Tx 75244 USA
Make sure to include a copy of your proof of purchase

KIDKRAFT

Consumer Registration Card

First Name | Initial | Last Name

Street | Apt. No.

City | State/Province | ZIP/Postal Code

Country | Telephone Number

E-Mail Address

Model Number | Model Name

Model Number & Name example
F24145 AINSLEY PLAY SYSTEM

Purchased From | Date Purchase

MM / DD / YY

Serial Number (on ID Plaque)



ID Plaque example

Box #: _____ 1 of _____
Box #: _____ 2 of _____
Box #: _____ 3 of _____
Box #: _____ 4 of _____
Box #: _____ 5 of _____
Box #: _____ 6 of _____

Box # (Ex: B29410 1of 6)

1 OF DE 6

ITEM #
ARTICLE N°
N.° DE ARTÍCULO
B29410

For common questions or for information on ordering replacement parts:

Help Center: https://kidkraft.zendesk.com/hc/en-us/