BS71027G Assembly Manual

Swivel Bar & Counter Stool

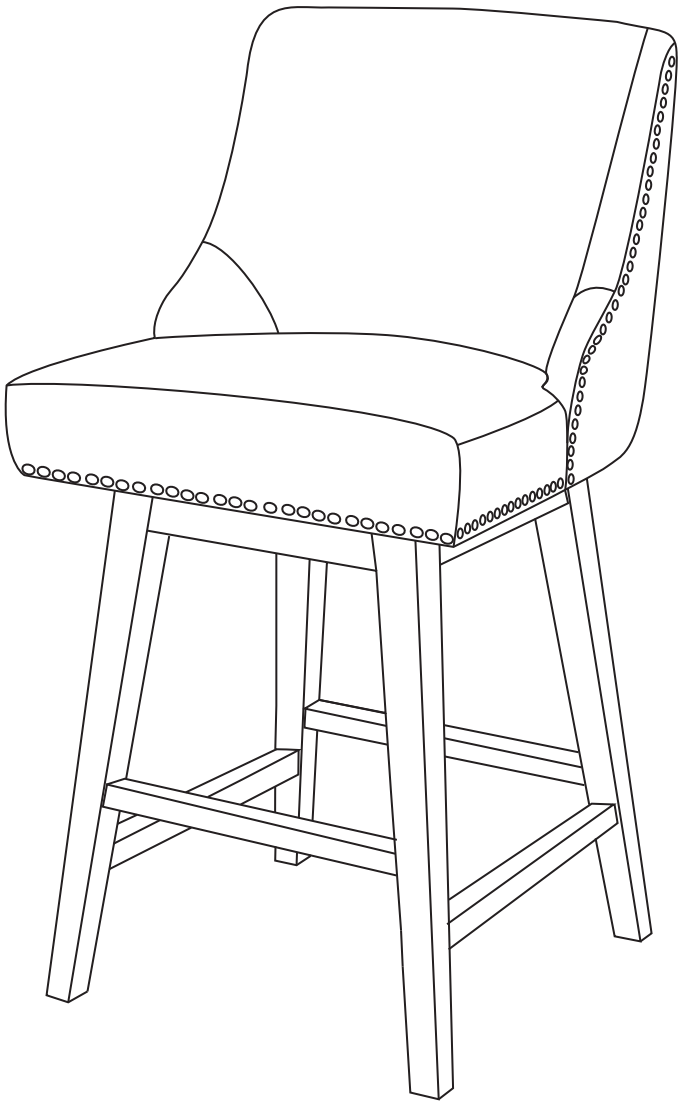

⚠ CAUTION

THIS ASSEMBLY MANUAL CONTAINS IMPORTANT SAFETY INFORMATION.
PLEASE READ AND KEEP FOR FUTURE REFERENCE.

A X 1	B X 2	C X 2
D X 2 (Short)	E x 2 (Long)	H1 x 8 Screw (M5x50mm)
H2 x 8 Bolt (M8x60mm)	H3 x 8 Spring Washer (M8)	H4 x 8 Flat Washer (φ8)
H5 x 4 Foot Leveler (M6xH30mm)	T1 x 1 Allen Wrench (5#)	Not Included

Before you begin:

1. Check if you have received all parts using the diagram on this page. Do not start the assembly process until all parts are present. If you have not received all parts or received wrong or damaged ones, please contact our customer service at **support@chitaliving.com** and we will get back to you.
2. Do not discard any of the packaging until you are certain that you have all the necessary parts for the assembly.
3. Do NOT use power tools for assembly.

1 Attach Legs (B & C) to Seat (A), using bolts (H2), lock washers (H3), flat washers (H4), and allen wrench (T1).
Note: Do not fully tighten yet.

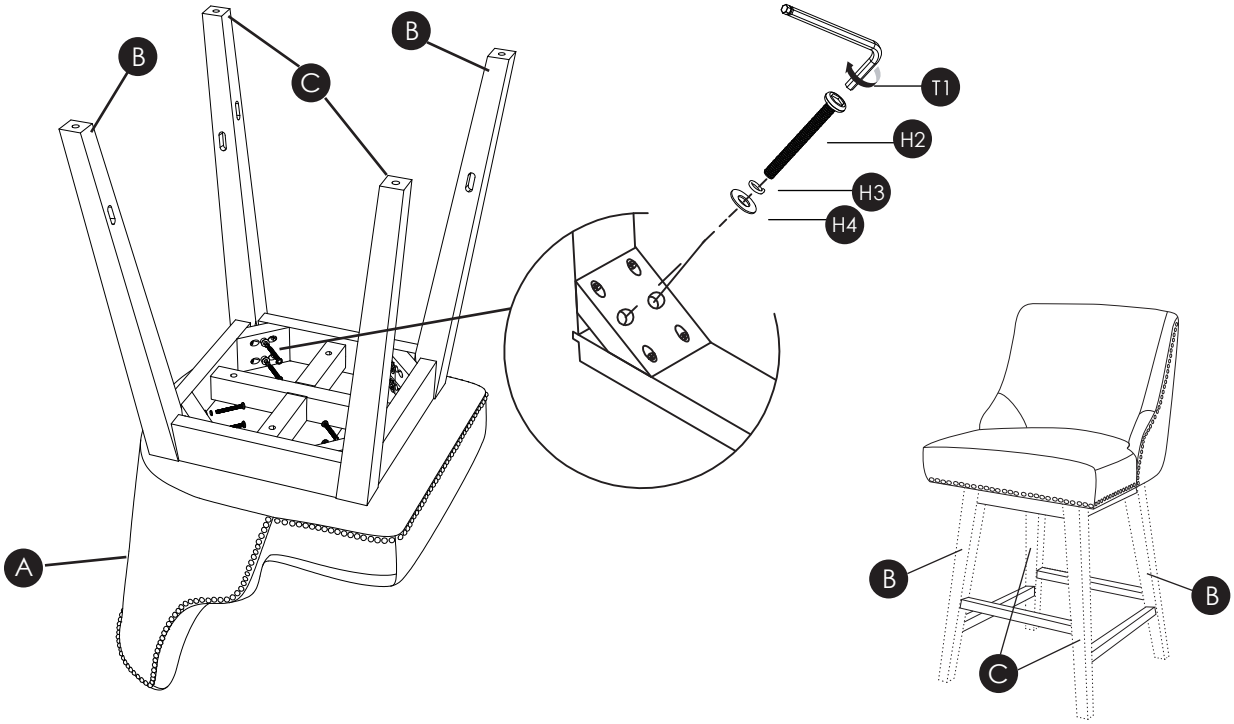

2 Insert **short** side rails (D) and **long** side rails (E).
Note: You may need to apply a little pressure to enable the rails to slot into position.

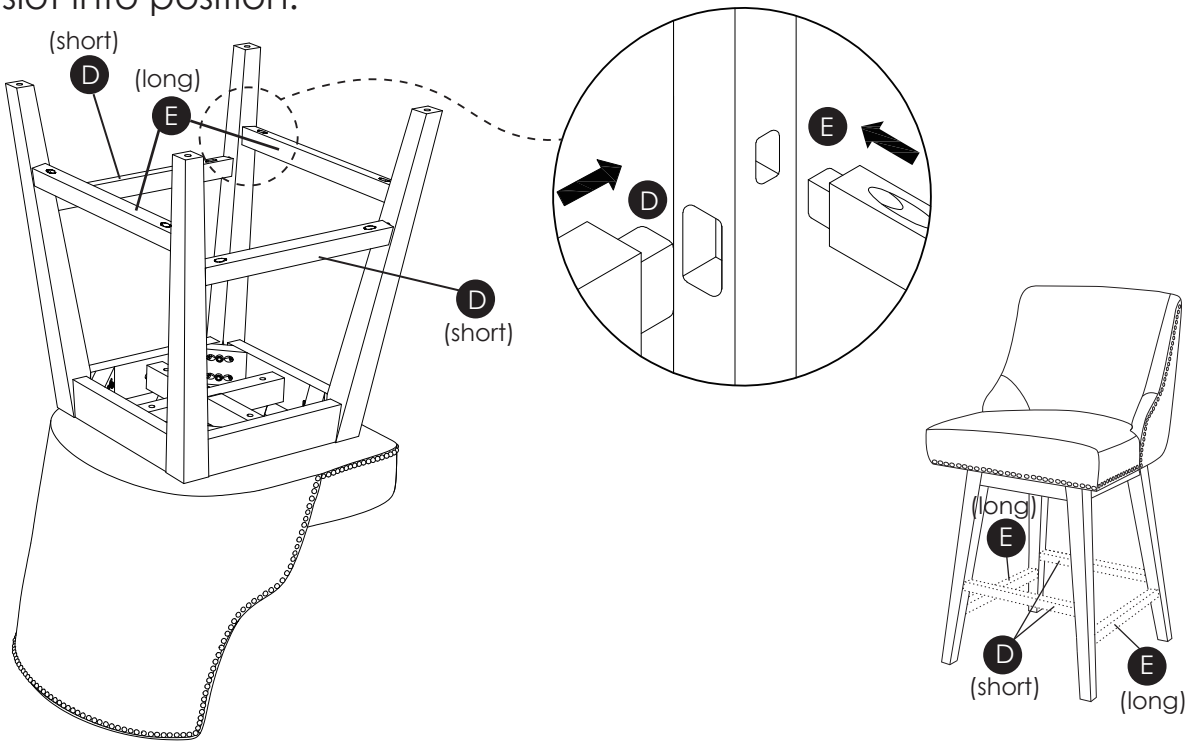

3 Attach the rails using screws (H1). **Do NOT start the screws if the rails are not fully slotted into position.**
Note: Do not fully tighten yet.

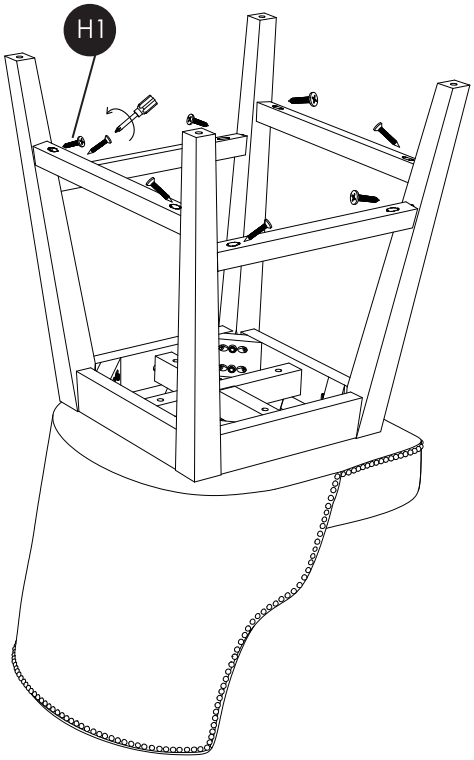

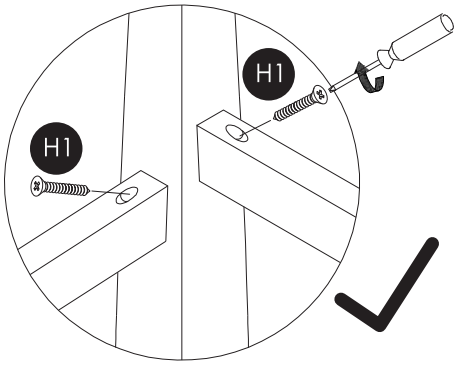

Note: Do NOT start the screws if the rails are not fully slotted into position.

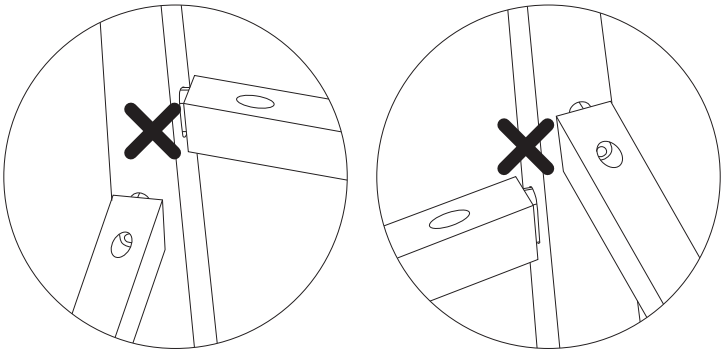

4 Attach foot levelers (H5) to Legs (B & C).

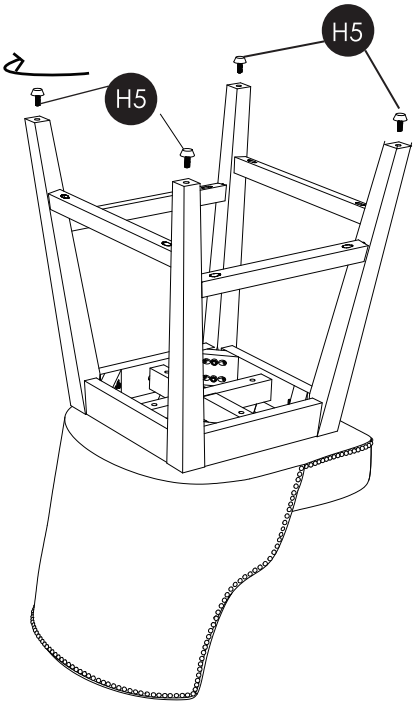

5 Turn assembled chair upright and place on a flat surface. Push legs up or down as necessary to level. **Once level, tighten all bolts and screws. Note:** Each leg has an adjustable foot leveler to help level your chair.

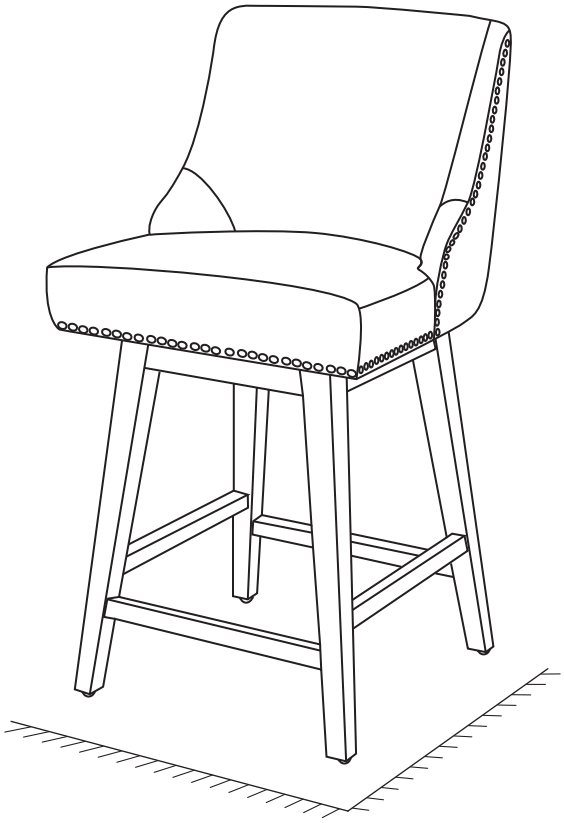

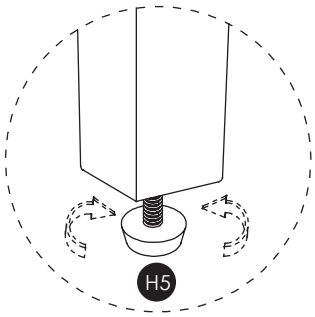

Foot levelers

6 Assembly complete. Enjoy.

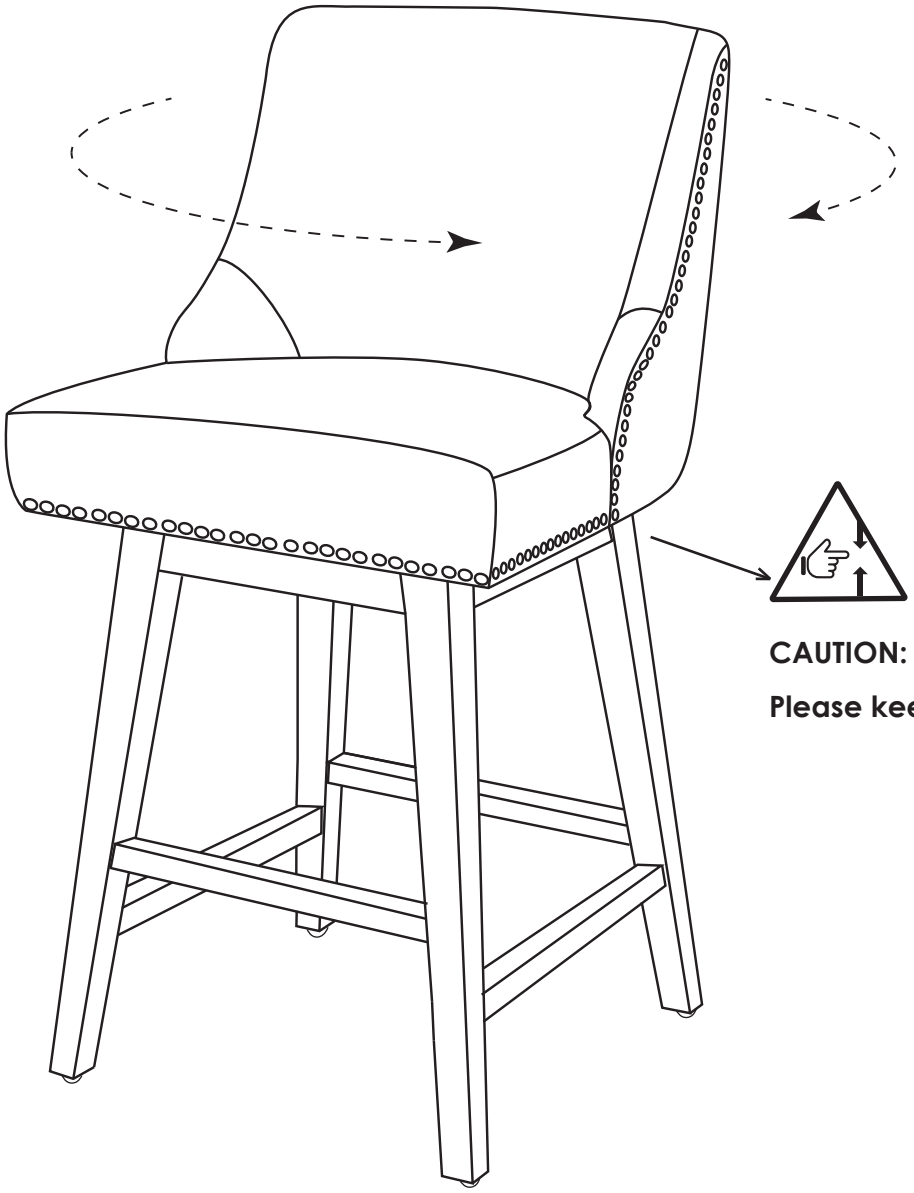

CAUTION: PINCH POINT.

Please keep hands clear during swivel.