Prüfbericht-Nr.: *Test report no.*:	**CN25LQ89 001**	**Auftrags-Nr.:** *Order no.*:	304125893	Seite 1 von 37 *Page 1 of 37*
Kunden-Referenz-Nr.: *Client reference no.*:	/	**Auftragsdatum:** *Order date:*	2025-04-29	
Auftraggeber: *Client*:	Ningboqiyuewuyimaoyiyouxiangongsi 4-140, No. 35,45 yaohang street, haishu district ningbo zhejiang 315012 CN			
Prüfgegenstand: *Test item*:	Shelf			
Bezeichnung / Typ-Nr.: *Identification / Type no.*:	KF330075-03			
Auftrags-Inhalt: *Order content*:	LABELING REVIEW PERFORMANCE TEST ANALYTICAL TEST			
Prüfgrundlage: *Test specification*:	TUVR-WF-HL-TP-09014-V1-Storage Furniture TUVR-CH-TP-00710-USA-V10-GCTR TUVR-WF-CH-TP-00714-V1-TSCA Supplemental Protocol TUVR-HL-TP-01010-USA-V4-Wooden Product			

Wareneingangsdatum: *Date of sample receipt*:	2025-04-29
Prüfmuster-Nr.: *Test sample no:*	A003982903-001 A004098489-001
Prüfzeitraum: *Testing period*:	2025-04-29 – 2025-09-28
Ort der Prüfung: *Place of testing*:	TÜV Rheinland (Suzhou) Co., Ltd.
Prüflaboratorium: *Testing laboratory:*	TÜV Rheinland (Suzhou) Co., Ltd.
Prüfergebnis*: *Test result**:	Pass



geprüft von:
tested by:

Datum:
Date: 2025-09-28

Lisa Zhu

Stellung / Position: Lisa Zhu / PE

genehmigt von:
authorized by:

Ausstellungsdatum:
Issue date: 2025-09-28

Stellung / Position: Kwame Wang / Reviewer

Sonstiges /
Other:

Buyer: Amazon
Country of Destination: US
Country of Origin: China
Article No.: KF330075-03
Supplier Art. No.:B0DHRYY9FR
Item No.:QR-XY-KF330075-03

Zustand des Prüfgegenstandes bei Anlieferung:
Condition of the test item at delivery: Prüfmuster vollständig und unbeschädigt
Test item complete and undamaged

* Legende:	P(ass) = entspricht o.g. Prüfgrundlage(n)	F(ail) = entspricht nicht o.g. Prüfgrundlage(n)	N/A = nicht anwendbar	N/T = nicht getestet
* *Legend:*	*P(ass) = passed a.m. test specification(s)*	*F(ail) = failed a.m. test specification(s)*	*N/A = not applicable*	*N/T = not tested*

Dieser Prüfbericht bezieht sich nur auf das o.g. Prüfmuster und darf ohne Genehmigung der Prüfstelle nicht auszugsweise vervielfältigt werden. Dieser Bericht berechtigt nicht zur Verwendung eines Prüfzeichens.
This test report only relates to the above mentioned test sample. Without permission of the test center this test report is not permitted to be duplicated in extracts. This test report does not entitle to carry any test mark.

Anmerkungen
Remarks

1	Alle eingesetzten Prüfmittel waren zum angegebenen Prüfzeitraum gemäß eines festgelegten Kalibrierungsprogramms unseres Prüfhauses kalibriert. Sie entsprechen den in den Prüfprogrammen hinterlegten Anforderungen. Die Rückverfolgbarkeit der eingesetzten Prüfmittel ist durch die Einhaltung der Regelungen unseres Managementsystems gegeben. Detaillierte Informationen bezüglich Prüfkonditionen, Prüfequipment und Messunsicherheiten sind im Prüflabor vorhanden und können auf Wunsch bereitgestellt werden. *The equipment used during the specified testing period was calibrated according to our test laboratory calibration program. The equipment fulfils the requirements included in the relevant standards. The traceability of the test equipment used is ensured by compliance with the regulations of our management system. Detailed information regarding test conditions, equipment and measurement uncertainty is available in the test laboratory and could be provided on request.*
2	Wie vertraglich vereinbart, wurde dieses Dokument nur digital unterzeichnet. Der TÜV Rheinland hat nicht überprüft, welche rechtlichen oder sonstigen diesbezüglichen Anforderungen für dieses Dokument gelten. Diese Überprüfung liegt in der Verantwortung des Benutzers dieses Dokuments. Auf Verlangen des Kunden kann der TÜV Rheinland die Gültigkeit der digitalen Signatur durch ein gesondertes Dokument bestätigen. Diese Anfrage ist an unseren Vertrieb zu richten. Eine Umweltgebühr für einen solchen zusätzlichen Service wird erhoben. Informationen zur Verifizierung der Authentizität unserer Dokumente erhalten Sie auf folgender Webseite: go.tuv.com/digital-signature *As contractually agreed, this document has been signed digitally only. TUV Rheinland has not verified and unable to verify which legal or other pertaining requirements are applicable for this document. Such verification is within the responsibility of the user of this document. Upon request by its client, TUV Rheinland can confirm the validity of the digital signature by a separate document. Such request shall be addressed to our Sales department. An environmental fee for such additional service will be charged. For information on verifying the authenticity of our documents, please visit the following website: go.tuv.com/digital-signature*
3	Prüfklausel mit der Note * wurden an qualifizierte Unterauftragnehmer vergeben und sind unter der jeweiligen Prüfklausel des Berichts beschrieben. Abweichungen von Prüfspezifikation(en) oder Kundenanforderungen sind in der jeweiligen Prüfklausel im Bericht aufgeführt. *Test clauses with remark of * are subcontracted to qualified subcontractors and descripted under the respective test clause in the report.* *Deviations of testing specification(s) or customer requirements are listed in specific test clause in the report.*
4	Die Entscheidungsregel für Konformitätserklärungen basierend auf numerischen Messergebnisen in diesem Prüfbericht basiert auf der "Null-Grenzwert-Regel" und der "Einfachen Akzeptanz" gemäß ILAC G8:2019 und IEC Guide 115:2021, es sei denn, in der auf Seite 1 dieses Berichts genannten angewandten Norm ist etwas anderes festgelegt oder vom Kunden gewünscht. Dies bedeutet, dass die Messunsicherheit nicht berücksichtigt wird und daher auch nicht im Prüfbericht angegeben wird. Zu weiteren Informationen bezueglich des Risikos durch diese Entscheidungsregel siehe ILAC G8:2019. *The decision rule for statements of conformity, based on numerical measurement results, in this test report is based on the “Zero Guard Band Rule” and “Simple Acceptance” in accordance with ILAC G8:2019 and IEC Guide 115:2021, unless otherwise specified in the applied standard mentioned on Page 1 of this report or requested by the customer. This means that measurement uncertainty is not taken in account and hence also not declared in the test report. For additional information to the resulting risk based of this decision rule please refer to ILAC G8:2019.*

Prüfbericht-Nr.: CN25LQ89 001
Test report no.:

Produktbeschreibung
Product description

1	**Produktdetails** *Product details*	Shelf
2	**Maße / Gewicht** *Dimensions / Weight*	Dimensions(H x W x D): 615mm x 1400mm x 400mm Weight(Product): 86.75kg
3	**Bedienelemente** *Operating elements*	/
4	**Ausstattung / Zubehör** *Equipment / Accessories*	/
5	**Verwendete Materialien** *Used materials*	/
6	**Sonstiges** *Other*	Test sample(s), as well sample information, description, product details and intended usage was provided by customer.
7	**Prüfmusterbereitstellung**: *Test sample obtaining*	☒ Sending by customer ☐ Sampling by TÜV Rheinland Group ☐ others:

Produktbeschreibung
Product description

Product	Warning label
	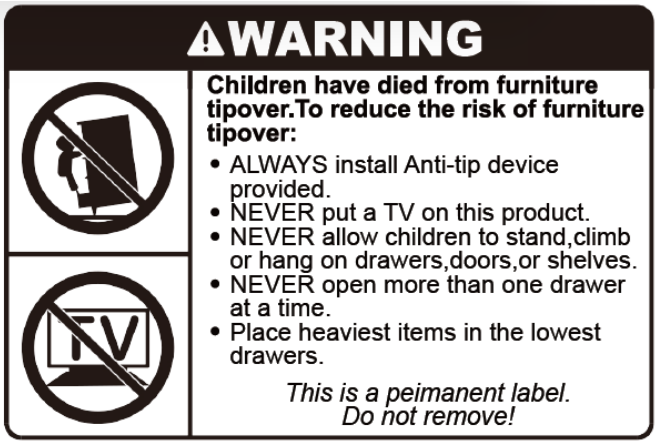
TSCA label	**Label of Tipover restraints**
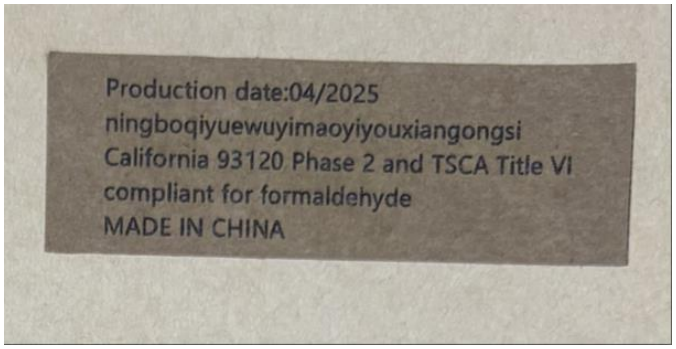	Manufacturer name: Nanping Tanrui Furniture Co. , Ltd. Address: No. 114, Tower Front Road, Huiyao Industrial Park, Jianyang District, Nanping, Fujian province Production Date: 02/2025
Master carton	**Instruction cover page**
	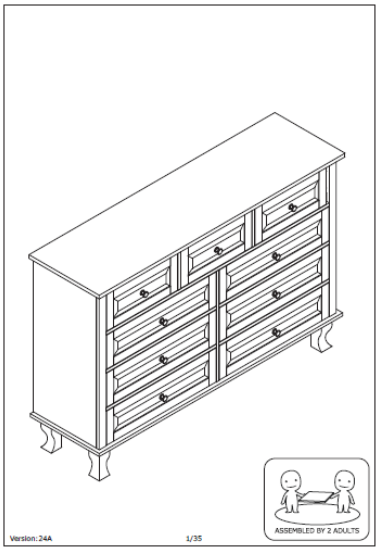

TÜVRheinland® Test Protocol

Client	Wayfair		
Product Description:	Storage furniture		
Scope:	Rack, Cabinet, Armoire	Protocol. No.	WF-HL-TP-09014
		Version	1
Market covered:	USA, Canada, EU	Issue Date	June 2, 2022
		Page	Page 5 of 37

Attribute	Test Method / Standard	Requirement / Limit	Results
Labeling			
Product identification	Uniform Packaging and Labeling Regulations / NIST Handbook 130 2011 Part IV A section 3	Shall be labeled with product identification.	Pass
Product identification (For USA only)	Uniform Packaging and Labeling Regulations / NIST Handbook 130 Part IV A section 3	Shall be labeled with product identification.	Pass
Name and place of manufacturer, packer or distributor (For USA only)	Uniform Packaging and Labeling Regulations / NIST Handbook 130 Part IV A section 5	Shall be labeled with the manufacturer, packer, or distributor's name and address (city, state and zip).	Pass
Net quantity of contents (For USA only)	Uniform Packaging and Labeling Regulations / NIST Handbook 130 Part IV A section 6	• Net quantity of contents shall be expressed in terms of weight or mass, measure, numerical count, or combination to give accurate information to facilitate consumer comparison. (US and metric units)	Pass
Product identification (For Canada only)	Consumer Packaging and Labelling Act and Regulations	Product identification shall be English and French, on PDP and in bold with 1.6 mm minimum type size	N/A

Absatz *Clause*	**Anforderungen - Prüfungen /** *Requirements - Tests*	**Messergebnisse – Bemerkungen/** *Measuring results - Remarks*	**Ergebnis** *Result*

Attribute	Test Method / Standard	Requirement / Limit	Results
Name and place of manufacturer or distributor (For Canada only)	Consumer Packaging and Labelling Act and Regulations	Manufacturer or distributor's name & address (City & Postal Code). Minimum 1.6 mm type size Placed anywhere except bottom – English or French Where a prepackaged product is wholly manufactured or produced in a country other than Canada, the marking shall consist of one of the following: -The name and address of a Canadian dealer preceded by the words "imported by" ("importé par") or "imported for" ("importé pour"); or -The statement of geographic origin located immediately adjacent to the name and address of a Canadian dealer; or -The name and address of the dealer outside Canada	N/A
Net quantity of contents (For Canada only)	Consumer Packaging and Labelling Act and Regulations	Declaration must be in English and French, metric units, on PDP, bold, type size based on PDS size: Area of Principal Display Surface | Minimum Type <=32 cm² (5 in.²) | 1.6 mm (1/16 in.) >32 cm² and <=258 cm² (40 in.²) | 3.2 mm (1/8 in.) >258 cm² and <=645 cm² (100 in.²) | 6.4 mm (1/4 in.) >645 cm² and <=25.8 dm² (400 in.²) | 9.5 mm (3/8 in.) >25.8 dm² (400 in.²) | 12.7 mm (1/2 in.)	N/A
Unnecessary Proposition 65 Warning (For USA Only)	Visual Check	Products should not bear an unnecessary Proposition 65 warning (product passes proposition 65 analytical testing and a warning is present). Report as NA if the unit does not bear a Proposition 65 warning.	N/A
CPSC Flammability Labelling	CPSC/ COVID 19 Regulatory Relief and Work from Home Safety Act	All upholstered seating furniture (excluding bedding products, mattresses and foundations) comply with California's Technical Bulletin 117-2013 shall bear a permanent label that includes the statement "Complies with U.S. CPSC requirements for upholstered furniture flammability." Effective date for flammability requirement: June 25, 2021 Effect date for labeling: June 25, 2022 Note: pass/fail ratings should be given; effective immediately	N/A
Bilingual labelling (For Canada only)	Consumer Packaging and Labelling Act and Regulations section 6	All information required by the Act and Regulations to be shown on the label shall be shown in both English and French except that the identity and principal place of business of the person by or for whom the product was manufactured, processed, produced or packaged for resale may be shown in one of the official languages.	N/A

Absatz *Clause*	**Anforderungen - Prüfungen /** *Requirements - Tests*	**Messergebnisse – Bemerkungen/** *Measuring results - Remarks*	**Ergebnis** *Result*

Attribute	Test Method / Standard	Requirement / Limit	Results
Language – Quebec (For Canada only)	Quebec, Charter of the French Language, CQLR c C-11 Title I Chapter VII	Every inscription on a product, on its container or on its wrapping, or on a document or object supplied with it, including the directions for use and the warranty certificates, must be drafted in French. The French inscription may be accompanied with a translation or translations, but no inscription in another language may be given greater prominence than that in French.	N/A
Product identification (For Europe only)	Directive 2001/95/EC	The product shall be labeled with product identification.	N/A
Name and contact address of manufacturer, importer or distributor (For Europe only)	Directive 2001/95/EC	The product shall be labeled with the manufacturer, importer, or distributor's name and contact address.	N/A
Instructions (For Europe only)	Directive 2001/95/EC	The user's attention must be drawn to the prevention of dangers as well as rules with regard to use, supplementation and maintenance of the technical product.	N/A
Labeling of Product & Packaging (For Europe only)	Trade Description Order 1968/ Unfair Trading Regulations 2008 (SI 2008/1277)	All labeling information must be truthful.	N/A
Country of origin marking (For USA only)	19 CFR 134.11	Every article unless exempted of foreign origin (or its container) imported into the United States shall be marked in a conspicuous place as legibly, indelibly, and permanently as the nature of the article (or container) will permit, in such manner as to indicate to an ultimate purchaser in the United States the English name of the country of origin of the article. The country of origin (if outside the USA) shall be displayed on the same panel, in font size of similar prominence and in close proximity to USA, or the name of any city or location in the United States, or the name of the any foreign country or locality in which the article was manufactured or produced appear on an imported article or it's container. Important Note: 1. Goods produced in Hong Kong can no longer list Hong Kong as the country of origin and must use list China instead.	Pass

Attribute	Test Method / Standard	Requirement / Limit	Results
Country of origin marking (For Canada only)	Canada Customs Tariff, Marking of Imported Goods Regulations, SOR-94-10 / Marking of Imported Goods Memorandum D11-3-1	a) Imported goods shall indicate country of origin. b) Must be legible and sufficiently permanent to remain on the goods until it reaches the purchaser. c) For goods from NAFTA countries, the language may be English, French or Spanish. d) For goods from non-NAFTA countries, language may be English or French and marking should appear on individual articles. e) If the packaging conceals the Country of Origin mark, then the packaging must also be marked. f) There is a provision to mark only the container providing that certain conditions are met, such that the ultimate purchaser will see the marked container.	N/A
Country of origin marking (For Europe only)		Shall indicate country of origin legibly, and in comparable size and visible to purchase.	N/A
Warning on clothing storage units (US market only)	STURDY Act, ASTM F2057-23	Each clothing storage unit shall be permanently marked in at least one place with the warnings from this section. The warnings shall be in a conspicuous location when in use. The warnings shall be applied on one surface, not wrapped or folded around or over corners.	Pass See ASTM F2057-23 result table
Instruction of Tipover restraints	ASTM F3096	Installation instruction shall include a minimum the following: • Illustration showing installation method • Detailed written instructions with step by step instructions on how to properly attached the tipover restraint Parts list including illustrations	Pass See ASTM F2057-23 result table
Labelling of Tipover restraints	ASTM F3096	The following information shall be provided with each tipover restraint • Manufacturer's name and address Date of manufacture (capable of identifying at a minimum the month and year of manufacture)	Pass See ASTM F2057-23 result table
Construction & Workmanship			
Defects	TRGC-HL-TM-01010	Shall have no discernible surface degradation, including crazing, shivering, denting, bubbles, cracks, stains, deformations, chips, fractures, heavy lines, waves, shear marks, scratches, scuff marks, indentations, or blisters.	Pass
Workmanship	TRGC-HL-TM-01010	Shall have no components missing, malformed, and/or fractured.	Pass
Safety			
Stability of Clothing Storage Units with Interlocks (US market only)	STURDY Act, ASTM F2057-23	Gradually apply a 30 lbf (133 N) horizontal pull force on each interlocked element at center of pull area. Hold for at least 10 seconds	N/A
Stability of Clothing Storage Units Simulated clothing load (US market only)	STURDY Act, ASTM F2057-23	If 50% or more of storage volume can be extended load based on volume calculated in section 5.4. Open all doors and loaded elements for 30 seconds.	Pass See ASTM F2057-23 result table

Absatz *Clause*	**Anforderungen - Prüfungen /** *Requirements - Tests*	**Messergebnisse – Bemerkungen/** *Measuring results - Remarks*	**Ergebnis** *Result*

Attribute	Test Method / Standard	Requirement / Limit	Results
Stability of Clothing Storage Units Horizontal Dynamic Force (US market only)	STURDY Act, ASTM F2057-23	Open all doors and extendable elements (unloaded) Apply a 10 lbf (44 N) horizontal force at highest hand-hold not to exceed 56 inches (1422 mm) on extendable element most likely to cause tip over. Hold for 10 seconds.	Pass See ASTM F2057-23 result table
Stability of Clothing Storage Units Reaction on carpet with child (US market only)	STURDY Act, ASTM F2057-23	Place test blocks under most rear floor supports. Gradually over a period of at least 5 seconds apply test weight apparatus over top of door or extendable element most likely to cause tip over. Hold for 30 seconds.	Pass See ASTM F2057-23 result table
Stability of Clothing Storage Units Permanency of wanting labels (US market only)	STURDY Act, ASTM F2057-23	For paper/non-paper label: during an attempt to remove it without the aid of tools or solvents, it cannot be removed, it tears into pieces upon removal, or such action damages the surface to which it is attached Warnings directly applied to surface Perform ASTM D3359 test according to method B	Pass See ASTM F2057-23 result table
Tipover restraints (US market only)	ASTM F3096	Shall be provided together with clothing storage unit Shall meet ASTM F3096	Pass See ASTM F2057-23 result table
Safety requirements for kitchen and bathroom storage units and domestic storage furniture and their components (EU market only)	EN 14749	Shall meet applicable requirements	N/A
Electrical safety (US market only)		Is the product meeting the applicable requirements and are the electrical components marked and listed (UL, TUV, ETL)?	N/A
Electrical safety (Canadian market only)		Is the product meeting the applicable requirements and are the electrical components marked and listed (CSA, UL, TUV, ETL)?	N/A
Product containing wood (US market only)	Lacey Act	Is product only made of wood, which not an endangered species?	N/A
Product containing wood (EU market only)	EU Timber Regulation	Is product only made of wood, which is legally harvested?	N/A
Supplemental Test Protocol / Standard			
*General Chemical Testing Requirement	TUVR-CH-TP-00710-USA-V10-GCTR	Must Comply With Requirements	Pass Refer to TUVR-CH-TP-00710-USA-V10-GCTR
*Law Label Supplemental	TUVR-WF-T_-00511	Must Comply With Requirements	N/A
*Flammability of Filling Materials	TUVR-WF-TP-09002	Must Comply With Requirements	N/A
*TSCA Supplemental Protocol	TUVR-WF-HL-TP-00714	Must Comply With Requirements	Pass Refer to TUVR-WF-HL-TP-00714

Remark:
1. Additional tests may be incurred subject to the final sample reviewed by TÜV Rheinland.
2. Unless otherwise stated, latest version of test methods, standards, regulations should be used.

3. Each test is conducted on one sample unless specified.

TÜVRheinland® Test Protocol

Product Description:	General Chemical Testing Requirement		
Scope:	It is the supplementary test protocol of general chemical requirement for Softlines, Hardlines and Electrical products (excluding toys, jewellery, and candle). Note: Function/ product test protocol(s) should be additionally assigned	Protocol. No. Version	TUVR-CH-TP-00710-USA 10
Market covered:	USA (does not include state requirements)	Issue Date Page	May 12, 2022 Page 10 of 37

Attribute	Test Method / Standard	Requirement / Limit	Results
General			
* Toxic elements in packaging components	Toxic in Packaging Clearinghouse (TPCH) EPA-SW-846 Method 3052 / ASTM F2617	Must not contain combined concentration levels of lead, cadmium, mercury, or hexavalent chromium in excess of 100 ppm.	N/R
* Formaldehyde emission (US EPA) (For Composite Wood Panel)	40 CFR 770 ASTM D6007 / ASTM E1333	Shall comply with the following requirement: **Wood types** / **Limit / ppm** Hardwood plywood (made with a veneer core or a composite core) / 0.05 Particleboard / 0.09 Medium-density fibreboard / 0.11 Thin medium-density fibreboard / 0.13 **Remark:** 1. Composite wood raw panel must be certified by an EPA TSCA Titile VI Third Party Certifier (TPC). Testing result here is for reference only and could be carried out upon client's request. 2. Testing for composite wood panel in finished products is not mandatory and could be carried out upon client's request	N/R

Attribute	Test Method / Standard	Requirement / Limit	Results
* DecaBDE	40 CFR 751.405	Must not contain in products or articles, including curtains in hospitability, cable insulation in nuclear power plants, etc. **Exceptions:** 1. Recycled plastic without adding new decaBDE (permanently exempt) 2. Plastic shipping pallets already in use can be used until the end of their service lives Note: Actual testing will not be conducted. Vendor must submit a DoC confirming that their product does not contain any intentionally added decaBDE. If a DoC is not received then a fail shall be issued	Pass LoG provided
* Phenol, isopropylated phosphate (3:1) (PIP (3:1))	40 CFR 751.407	Must not contain in products or articles Effective: 31 October 2024 **Note:** Actual testing will not be conducted. Vendor must submit a DoC confirming that their product does not contain any intentionally added PIP(3:1). If a DoC is not received then a fail shall be issued	Pass LoG provided
* Pentachlorothiophenol (PCTP)	40 CFR 751.411	Must not contain in products or articles Note: Actual testing will not be conducted. Vendor must submit a DoC confirming that their product does not contain any intentionally added PCTP. If a DoC is not received then a fail shall be issued	Pass LoG provided
* Hexachlorobutadiene (HCBD)	40 CFR 751.413	Must not contain in products or articles Note: Actual testing will not be conducted. Vendor must submit a DoC confirming that their product does not contain any intentionally added HCBD. If a DoC is not received then a fail shall be issued	Pass LoG provided
Additional Requirements for Adult Furniture			
* Total lead content in surface coatings (For Adult Furniture only)	CPSIA, section 101 / 16 CFR 1303 CPSC-CH-E1003-09.1 ASTM F2853	All accessible surface coatings in assembled state on adult furniture [exempt factory applied coatings on metal components/parts] and household paint shall not contain lead or lead components in which the lead content is in exceed of 0.009% (90ppm) of the weight of the total content.	Pass See chemical result table
Additional Requirements for Electrical Products			

Absatz *Clause*	**Anforderungen - Prüfungen /** *Requirements - Tests*	**Messergebnisse – Bemerkungen/** *Measuring results - Remarks*	**Ergebnis** *Result*

Attribute	Test Method / Standard	Requirement / Limit	Results
* Mercury Content (For Batteries Only)	Mercury-containing & Rechargeable Battery Management Act 1996 Acid digestion / ICP or AAS	Shall comply with the following requirements: **Types of Battery** / **Limit** Alkaline-manganese batteries: Prohibited Zinc-carbon batteries: Prohibited Alkaline-manganese button cells: 25 mg/ cell Mercuric-oxide button cells: Prohibited Other Mercuric-oxide batteries: Prohibited if cannot fulfil recycling and disposal requirements as stated in section 206 Remark: TÜV Rheinland reporting limit = 1 mg/kg	N/A
Additional Requirements for Food Contact Materials			
* Food contact testing	FDA CPG Section 545.400, 545.450, 545.500 & 21 CFR 175-177	Specific to material and application	N/A
Additional Requirements for Child use and care Articles			
* Total lead content in surface coatings	CPSIA, section 101 / 16 CFR 1303 CPSC-CH-E1003-09.1 ASTM F2853	All accessible surface coatings, before and after use and abuse testing, on items intended for children ages 12 and under shall not contain lead or lead components in which the lead content is in excess of 0.009% (90ppm) of the weight of the total content.	Pass See chemical result table
* Total lead content in substrate materials	CPSIA, section 101 / 16 CFR 1303 CPSC-CH-E1001-08.3 & CPSC-CH-E1002-08.3	All accessible substrates, before and after use and abuse testing, on items intended for children ages 12 and under shall not contain lead in excess of 0.01% (100ppm) of the weight of the total content. **Remarks:** The following untreated and unfinished engineered wood products (EWPs) (16 CFR 1252) are exempted from third party testing a) particleboard made from virgin wood or pre-consumer wood waste, b) hardwood plywood made from virgin wood or pre-consumer wood waste and c) medium-density fibreboard made from virgin wood or pre-consumer wood waste **Untreated:** no additional treatments applied e.g. flame retardants, rot resistant finishes **Unfinished:** No finishes applied e.g. paint or similar surface coating materials, wood glue, or metal fasteners (e.g. nails or screws)	Pass See chemical result table

Absatz *Clause*	**Anforderungen - Prüfungen /** *Requirements - Tests*	**Messergebnisse – Bemerkungen/** *Measuring results - Remarks*	**Ergebnis** *Result*

Attribute	Test Method / Standard	Requirement / Limit	Results
* Phthalates	CPSIA Section 108 as amended by 16 CFR 1307 CPSC-CH-C1001-09.4	Accessible parts of children's toys and childcare articles shall comply with the following requirements: **Limits** BBP, DBP, DEHP, DINP, DPENP, DHEXP, DCHP, or DIBP: 0.1% EACH **Remark:** The followings are exempted from third party testing: **(1) Plastic with specified additives (16 CFR 1308.2)** Polypropylene (PP), polyethylene (PE), general purpose polystyrene (GPPS), medium-impact polystyrene (MIPS), high-impact polystyrene (HIPS), super high-impact polystyrene (SHIPS) & acrylonitrile butadiene styrene (ABS) **(2) Untreated & unfinished engineered wood products (EWPs) (16 CFR 1252)** a) particleboard made from virgin wood or pre-consumer wood waste, b) hardwood plywood made from virgin wood or pre-consumer wood waste and does not contain polyvinyl acetate (PVAc) adhesive formulations and c) medium-density fibreboard made from virgin wood or pre-consumer wood waste **Untreated:** no additional treatments applied e.g. flame retardants, rot resistant finishes **Unfinished:** No finishes applied e.g. paint or similar surface coating materials, wood glue, or metal fasteners (e.g. nails or screws) **(3) Unfinished manufactured fibre (16 CFR 1253)** Nylon, polyurethane (spandex), viscose rayon, acrylic, modacrylic, natural rubber latex, polyester (PET) **Unfinished fibres:** No chemical additives, e.g. flame retardants, dyes, and / or any other treatment or finish, excluding ones that are required to manufacture the fibres itself.	Pass See chemical result table
Additional Requirement for Mixture and Preparation			

Attribute	Test Method / Standard	Requirement / Limit	Results
* Hazardous liquid chemicals in children's products – Document review (For Children's Liquid-filled Items)	FHSA / 16 CFR 1500.231	A toy or other article intended for use by children that contains an accessible and harmful amount of a hazardous chemical is banned. In evaluating the potential hazard associated with children's products that contain hazardous chemicals, certain factors have to be considered: the total amount of the hazardous chemical in a product, the accessibility of the hazardous chemicals to children, the risk presented by that accessibility, the age and foreseeable behavior of the children exposed to the product, and the marketing, patterns of use, and life cycle of the product. The sample shall comply with corresponding requirement. Remark: Documentation or test report shall be dated within one year.	N/A
* Labeling of Hazardous substances (For mixtures and the like)	FHSA / 16 CFR 1500.14(a) & (b)(1)-(5)	Shall comply with the most current version of the regulation. Remark: ingredient list with CAS no and percentage shall be provided.	N/A
* Labeling of Hazardous Art Materials Act (LHAMA) evaluation – Document review (For Arts Materials)	16 CFR 1500.14(b)(8) / ASTM D4236 Ingredient review	All art material formulations shall be appropriately reviewed by a toxicologist every 5 years for the potential for producing chronic adverse health effects. Remark: Report shall be issued by a certified toxicologist	N/A
* Labeling of Hazardous Art Materials Act (LHAMA) evaluation – Labeling review (For Arts Materials)	16 CFR 1500.14(b)(8) / ASTM D4236	All art materials shall contain all required information such as, signal words, list of potentially chronic hazards, name of chronically hazardous component, safe handling instructions and information sources, and conform to the label requirements as defined by 16 CFR 1500.14 / ASTM D4236.	N/A
* Toxicological Risk Assessment (TRA) – Document review & Labeling review (If applicable) (For liquids, pastes, putties, gels and powders or Other materials bearing a "Non-Toxic" claim on product and/or packaging)	16 CFR 1500.3(b)(5) and (b)(7)-(9) Ingredient review	Toxicological Risk Assessment on acute toxicity, skin irritation, eye irritation, corrosives, and strong sensitizers. If toxicological hazard(s) is/are present, the product shall be labeled appropriately. Remark: Documentation or test report shall be dated within five years.	N/A
* Microbiological purity of water used (For process water only & items can be placed into mouth) (By request only)	ASTM F963-16 cl. 4.3.6.1 modified	Shall meet the requirement of < 10 colony forming units per millilitre (cfu/ml) and the absence by test of coliform bacteria Modification = Expanded scope to other products	N/A

Absatz *Clause*	**Anforderungen - Prüfungen /** *Requirements - Tests*	**Messergebnisse – Bemerkungen/** *Measuring results - Remarks*	**Ergebnis** *Result*

Attribute	Test Method / Standard	Requirement / Limit	Results
* Microbial Contamination (By request only)	USP Chapter 61 & 62 / ASTM F963-16 cl. 4.3.6.3 modified	Below parameters would be assessed: - Total Aerobic Microbial Count (TAMC) - Total Combined Yeasts and Molds Count (TYMC) - Staphylococcus aureus - Pseudomonas aeruginosa - Salmonella - Escherichia coli - Bile-Tolerant Gram-Negative Bacteria - Clostridia - Candida albicans Modification = Expanded scope to other products	N/A
* Antimicrobial Effectiveness (By request only)	USP Chapter 51 / ASTM F963-16 cl. 4.3.6.4 modified	Below parameters would be assessed: - Escherichia coli - Staphylococcus aureus - Pseudomonas aeruginosa - Candida albicans - Aspergillus brasiliensis Modification = Expanded scope to other products	N/A
* Microbiological Verification of sterility claims (By request only)	USP Chapter 71	Products that claim to be sterilized shall not contain a viable microorganism per USP Chapter 71 sterility test. Products that claim to be used as a sterilizer shall perform as intended as indicated by the absence of a viable microorganism in the sterilized product per USP Chapter 71 sterility test.	N/A
* Phenol, isopropylated phosphate (3:1) (PIP (3:1))	40 CFR 751.407	Must not contain in adhesive and sealants (Effective: 1 January 2025) Note: Actual testing will not be conducted. Vendor must submit a DoC confirming that their product does not contain any intentionally added PIP (3:1). If a DoC is not received then a fail shall be issued	N/A
* 2,4,6-Tris(tert-butyl)phenol (2,4,6-TTBP)	40 CFR 751.409	Must not exceed 0.3% by weight 1. in any size container when used as an oil or lubricant additive and 2. in containers with a volume less than 35 gallons (Effective: 6 January 2026) Note: Actual testing will not be conducted. Vendor must submit a DoC confirming that their product does not contain any intentionally added 2,4,6-TTBP. If a DoC is not received then a fail shall be issued	N/A

Remark:
1. Additional tests may be incurred subject to the final sample reviewed by TÜV Rheinland.
2. Unless otherwise stated, latest version of test methods, standards, regulations should be used.

Key: * : Additional charge items

TÜVRheinland®

Test Protocol

Client	Wayfair		
Product Description:	Toxic Substances Control Act (TSCA) Supplemental Protocol		
Scope:	This supplemental protocol is applicable to TSCA chemical requirements for USA.	Protocol No.	WF-CH-TP-00714
		Version	V1
Market covered:	USA	Issue Date	June 20, 2023
		Page	Page 16 of 37

Attribute	Test Method / Standard	Requirement / Limit	Results
Analytical			
US EPA Persistent, Bioaccumulative, and Toxic (PBT) Chemicals under TSCA	In-house method, GC-MS analysis	As required under the Toxic Substances Control Act (TSCA), as amended by the Frank R. Lautenberg Chemical Safety for the 21st Century Act, EPA issued five final rules in December 2020 to reduce exposures to certain chemicals that are persistent, bioaccumulative and toxic (PBT). These chemicals build up in the environment over time and can therefore have potential risks for exposed populations, including the general population, consumers and commercial users, and susceptible subpopulations (such as workers, subsistence fishers, tribes and children). US EPA Limit: Deca-BDE • March 8, 2021 – manufacturing and processing of Deca-BDE or Deca-BDE containing products/articles Limit – prohibited • January 6, 2022 – Distribution into commerce of Deca-BDE or Deca-BDE containing products/articles Limit – prohibited PIP (3:1) • October 24, 2024– processing and distribution into commerce of PIP (3:1) or PIP (3:1) containing products/articles Limit – prohibited 2,4,6-TTBP • January 6, 2026 – Distribution into commerce of TTBP or TTBP in containers with a volume less than 35 gallons. Limit - ≤ 0.3% by weight in any container with a volume of less than 35 gallons • January 6, 2026 –processing and distribution in commerce of 2,4,6-TTBP oil and lubricant additives	Pass LoG provided

<table>
<tr><th>Attribute</th><th>Test Method / Standard</th><th>Requirement / Limit</th><th>Results</th></tr>
<tr><td></td><td></td><td>Limit - ≤ 0.3% by weight

TTBP
• January 6, 2026 – Distribution into commerce of TTBP or TTBP containing products
Limit - ≤ 0.3% by weight in any container with a volume of less than 35 gallons

HCBD
• March 8, 2021 – manufacturing, processing and distribution into commerce of HCBD or HCBD containing products/articles
Limit – prohibited

PCTP
• March 8, 2021 – manufacturing and processing of PCTP or PCTP containing products/articles
Limit - ≤ 1% by weight

• January 6, 2022 – distribution into commerce of PCTP or PCTP containing products/articles
Limit - ≤ 1% by weight

In lieu of testing, approved letter of guarantee (LoG) dated within one year can be submitted for review.</td><td></td></tr>
<tr><td>EPA First Ten Chemicals for Review Under New TSCA Legislation</td><td>In-house method, GC-MS, HPLC-DAD, HPLC-MS and/or polarized light microscopy analysis</td><td>Under TSCA EPA is now required to evaluate existing chemicals to determine whether they “present an unreasonable risk of injury to health or the environment.” The Agency will start the risk evaluation process for these first 10 chemicals and within six months release a scoping document for each chemical which includes the hazard(s), exposure(s), conditions of use, and the potentially exposed or susceptible subpopulation(s) the Agency plans to consider for the evaluation.

EPA first 10 chemicals under TSCA
<table><tr><th>No.</th><th>Chemical Name</th><th>CAS Number</th></tr><tr><td>1</td><td>1,4-Dioxane</td><td>123-91-1</td></tr><tr><td>2</td><td>1-Bromopropane</td><td>106-94-5</td></tr></table></td><td>Pass

LoG provided</td></tr>
</table>

Absatz *Clause*	**Anforderungen - Prüfungen /** *Requirements - Tests*	**Messergebnisse – Bemerkungen/** *Measuring results - Remarks*	**Ergebnis** *Result*

<table>
<tr><th>Attribute</th><th>Test Method / Standard</th><th>Requirement / Limit</th><th>Results</th></tr>
<tr><td></td><td></td><td>
<table>
<tr><td>3</td><td>Asbestos</td><td>-</td></tr>
<tr><td>4</td><td>Carbon Tetrachloride</td><td>56-23-5</td></tr>
<tr><td>5</td><td>Cyclic Aliphatic Bromide (HBCD)</td><td>-</td></tr>
<tr><td>6</td><td>Methylene chloride (MC)</td><td>75-09-2</td></tr>
<tr><td>7</td><td>N-methylpyrrolidone (NMP)</td><td>872-50-4</td></tr>
<tr><td>8</td><td>Pigment Violet 29 (Anthra[2,1,9-def: 6,5,10-d’e’f’] diisoquinoline-1,3,8,10(2H,9H)-tetrone)</td><td>81-33-4</td></tr>
<tr><td>9</td><td>Trichloroethylene (TCE)</td><td>79-01-6</td></tr>
<tr><td>10</td><td>Tetrachloroethylene (Perchloroethylene)</td><td>127-18-4</td></tr>
</table>
In lieu of testing, approved letter of guarantee (LoG) can be submitted for review.
</td><td></td></tr>
<tr><td>EPA High-priority substances for risk evaluation under TSCA</td><td>In-house method, ICP-OES, GC-MS and/or HPLC-DAD-MS analysis</td><td>
On December 20, 2019, EPA finalized the designation of 20 chemical substances as a high-priority for risk evaluation under TSCA. This was the final step of the prioritization process initiated on March 20, 2019. These chemicals will move through the process required by TSCA to evaluate any unreasonable risks they may present to human health or the environment.
<table>
<tr><td colspan="2">EPA High-Priority Substances for risk evaluation und</td></tr>
<tr><td>No.</td><td>Chemical Name</td></tr>
<tr><td>1</td><td>p-Dichlorobenzene</td></tr>
<tr><td>2</td><td>1,2-Dichloroethane</td></tr>
<tr><td>3</td><td>Trans-1,2-Dichloroethylene</td></tr>
<tr><td>4</td><td>o-Dichlorobenzene</td></tr>
<tr><td>5</td><td>1,1,2-Trichloroethane</td></tr>
</table>
</td><td>Pass

LoG provided</td></tr>
</table>

Attribute	Test Method / Standard	Requirement / Limit	Results
		6 1,2-Dichloropropane — 78-87-5 7 1,1-Dichloroethane — 75-34-3 8 Dibutyl phthalate (DBP) (1,2-Benzene-dicarboxylic acid, 1,2-dibutyl ester) — 84-74-2 9 Butyl benzyl phthalate (BBP) - 1,2-Benzene-dicarboxylic acid, 1- butyl 2(phenylmethyl) ester — 85-68-7 10 Di-ethylhexyl phthalate (DEHP) - (1,2-Benzene-dicarboxylic acid, 1,2- bis(2-ethylhexyl) ester) — 117-81-7 11 Di-isobutyl phthalate (DIBP) - (1,2-Benzene-dicarboxylic acid, 1,2- bis-(2methylpropyl) ester) — 84-69-5 12 Dicyclohexyl phthalate — 84-61-7 13 4,4′-(1-Methylethylidene)bis[2, 6-dibromophenol] (TBBPA) — 79-94-7 14 Tris(2-chloroethyl) phosphate (TCEP) — 115-96-8 15 Phosphoric acid, triphenyl ester (TPP) — 115-86-6 16 Ethylene dibromide — 106-93-4 17 1,3-Butadiene — 106-99-0 18 1,3,4,6,7,8-Hexahydro-4,6,6,7,8,8-hexamethylcyclopenta [g]-2-benzopyran (HHCB) — 1222-05-5 19 Formaldehyde — 50-00-0 20 Phthalic anhydride — 85-44-9 **In lieu of testing, approved letter of guarantee (LoG) can be submitted for review.**	
Reporting Requirements for the Mercury Inventory of the Toxic Substances Control Act	Acid digestion / ICP	On June 27, 2018, EPA published in the Federal Register a final rule to require reporting from persons who manufacture (including import) mercury or mercury-added products, or otherwise intentionally use mercury in a manufacturing	Pass LoG provided

Attribute	Test Method / Standard	Requirement / Limit	Results
		process. The information collected through the reporting requirements are used to develop an inventory of mercury supply, use, and trade in the United States. Based on the information collected, the Agency will identify any manufacturing processes or products that intentionally add mercury and recommend actions to achieve further reductions in mercury use.	

TÜVRheinland®

Test Protocol

Product Description:	Wooden Product		
Scope:	It is the supplementary test protocol of generic requirement for products made of wood Note 1: Function/ product test protocol(s) should be additionally assigned	Protocol. No.	TUVR-HL-TP-01010-USA
		Version	4
Market covered:	USA	Issue Date	Jun 28, 2024
		Page	Page 21 of 37

Attribute	Test Method / Standard	Requirement / Limit	Results
Labeling			
* Formaldehyde emission standards for composite wood products– certification and labelling – finished goods	EPA TSCA Title VI / 40 CFR Part 770	Regulated composite wood products: - Hardwood plywood - Medium-density fiberboard - particleboard - Laminated product (unless exempt on the basis of the use of NAF or phenol resins) Finished goods containing regulated composite wood product, that are manufactured in or imported into the United States, must be certified and labelled as compliant with the TSCA Title VI. Laminated product producers that use a resin system to affix the wood or woody grass veneer to the substrate, other than those that use no-added formaldehyde (NAF) or phenol formaldehyde (PF) resins, is considered hardwood plywood producers, must be certified and labelled as compliant with TSCA Title VI as a panel producer of hardwood plywood. Label shall be present on the finished goods, or every box or bundle containing the finished goods, and shall include the fabricators name, date the finished good was produced (month/year format), and a statement of compliant, in legible English. Labels may be stamps, tags, or stickers. Based on the surface area of largest face of finished goods, if the regulated composite wood product content does not exceed 144 square inches, the labelling requirement of the finished goods can be exempted. Exception does not apply to finished goods or component parts that are designed to be used in combination or in multiples to create larger surface.	Pass
* CARB documentation and label review (California market only)	Title 17, CA Code of Regulations, Section 93120.7(d) Fabricator Label Requirements	**Vendor shall provide the material type of all wood components.** ***The Vendor shall be responsible for the accuracy of the information contained.***	Pass EPA TSCA certification and labelling provided

Attribute	Test Method / Standard	Requirement / Limit	Results
		If the product **does not contain** Composite Wood (Hardwood Plywood, Low/Medium/Hi Density Fiberboard, or Particleboard.) **Result is NA** If the product **does contain** Composite Wood (Hardwood Plywood, Low/Medium/Hi Density Fiberboard, or Particleboard.) materials: The Vendor must submit proof of compliance (letter, test report or certificate of compliance from the vendor indicating compliance) and specific reference (date of letter, report number, certificate number, etc.). A label shall be present on the product or the outer packaging, and it shall consist of a stamp, tag, or sticker and shall be in English. The label shall indicate at least the following: -Name of fabricator, -Date of production for the finished good, -The material complies with one of the following: - Phase 2 emissions of section code 93120.2a. For example "California 93120 Compliant for Formaldehyde" or "California Phase 2 Compliant" - Has No Added Formaldehyde based resins (NAF) or Ultra Low Emitting Formaldehyde based resins (ULEF) as per section 93120.3d	

Remark:
1. Additional tests may be incurred subject to the final sample reviewed by TÜV Rheinland.
2. Unless otherwise stated, latest version of test methods, standards, regulations should be used.

Key: * : Additional charge items
L : Legal requirement for the specific market(s) covered
S : Safety requirement
P : Performance requirement

Absatz *Clause*	**Anforderungen - Prüfungen /** *Requirements - Tests*	**Messergebnisse – Bemerkungen/** *Measuring results - Remarks*	**Ergebnis** *Result*

ASTM F2057-23, 16 CFR 1261 result table

Clause	Requirements - Tests	Measuring results - Remark	Result

ASTM F2057-23 Standard Safety Specification for Clothing Storage Units			
1	**Scope**		
2	**Referenced Documents**		
3	**Terminology**		
4	**Performance Requirements**		
4.4	Tipover restraint: Tipover restraints shall be included with each item of furniture	/	Pass
4.5	ASTM F3096 cl. 4: Tipover restraint shall withstand the static load of 60lb (27 kg) and maintain for 30 s.	/	Pass
4.6	Interlock Requirements	/	N/A
5	**Measurements**		
6	**Test Method - Scope**		
7	**Significance and Use**		
8	**Test Setup**		
9	**Test Procedure**		
9.1	Evaluate Interlock System	/	N/A
9.2	Stability Test Method	/	/
9.2.1	Simulated Clothing Load	/	Pass
9.2.2	Simulated Horizontal Dynamic Force	/	Pass
9.2.3	Simulated Reaction on Carpet with Child Weight	/	Pass
9.3	Permanency of Labels and Warnings Testing	/	/

Absatz *Clause*	**Anforderungen - Prüfungen /** *Requirements - Tests*	**Messergebnisse – Bemerkungen/** *Measuring results - Remarks*	**Ergebnis** *Result*
9.3.1	Paper label: A paper label shall be considered permanent if, during an attempt to remove it without the aid of tools or solvents, it cannot be removed, it tears into pieces upon removal, or such action damages the surface to which it is attached.	/	Pass
9.3.2	Non-paper label: A non-paper label shall be considered permanent if, during an attempt to remove it without the aid of tools or solvents, it cannot be removed or such action damages the surface to which it is attached.	/	N/A
9.3.3	Adhesion Test for Warnings Applied Directly onto the Surface of the Product	/	N/A
10	**Marking and Labeling**		
10.1	Warnings on Product	/	Pass
10.2	Warnings Format and Content	/	Pass
11	**Precision and Bias**		
12	**Keywords**		
Instructional Literature & Labeling Requirements according to ASTM F3096-2023			
5	Instructional Literature Installation instruction shall include a minimum the following: • Illustration showing installation method • Detailed written instructions with step by step instructions on how to properly attached the tipover restraint • Parts list including illustrations	/	Pass
6	Labeling Requirements The following information shall be provided with each tipover restraint • Manufacturer's name and address • Date of manufacture (capable of identifying at a minimum the month and year of manufacture)	/	Pass
16 CFR 1261 Safety Standard for Clothing Storage Units			
1261.1	Scope and purpose.		

Absatz *Clause*	**Anforderungen - Prüfungen /** *Requirements - Tests*	**Messergebnisse – Bemerkungen/** *Measuring results - Remarks*	**Ergebnis** *Result*
1261.2	Requirements for clothing storage units. Each clothing storage unit that is subject to ASTM F2057–23, Standard Safety Specification for Clothing Storage Units, approved on February 1, 2023, shall comply with ASTM F2057–23.	Refer to above results of ASTM F2057-23 & ASTM F3096-23	Pass

Chemical test result table:

Material List:

Material No.	Material	Color	Location
M001	MDF	brown	refer to photo
M002	Coating	grey	refer to photo
M003	Plastic	white	refer to photo
M004	Coating	white	refer to photo
M005	Metal	silver	refer to photo
M006	Metal	silver	refer to photo
M007	Metal	silver	refer to photo
M008	Metal	silver	refer to photo
M009	Metal	silver	refer to photo
M010	Metal	silver	refer to photo
M011	Metal	silver	refer to photo
M013-1	Plastic	grey	refer to photo
M012-3	Metal	silver	refer to photo

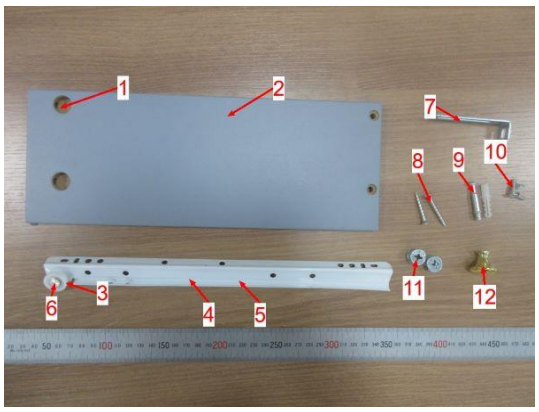

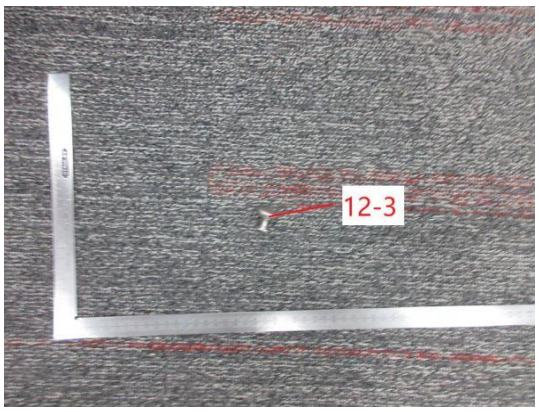



Absatz *Clause*	**Anforderungen - Prüfungen /** *Requirements - Tests*	**Messergebnisse – Bemerkungen/** *Measuring results - Remarks*	**Ergebnis** *Result*

1.Total Lead Content - 16 CFR 1303

Test Method: CPSC-CH-E1003-09.1

Result:

Test No.	Material No.	Test Parameter	Unit	RL	Customer's Requirement	Test Result
T001	M002 + M004	Total Pb	ppm	10	90	< RL

Abbreviation: < = less than
RL = Reporting Limit
mg/kg = milligram per kilogram

Absatz *Clause*	**Anforderungen - Prüfungen /** *Requirements - Tests*	**Messergebnisse – Bemerkungen/** *Measuring results - Remarks*	**Ergebnis** *Result*

2. Total lead content in substrate materials

Test Method: CPSC-CH-E1001-08.3 and CPSC-CH-E1002-08.3

Test result

Test No.	Material No.	Test Parameter	Unit	RL	Customer's Requirement	Test Result
T001	M001	Total Pb	ppm	10	100	< RL
T002	M003	Total Pb	ppm	10	100	< RL
T003	M005 + M006 + M007	Total Pb	ppm	10	100	< RL
T004	M008 + M009 + M010	Total Pb	ppm	10	100	< RL
T005	M011	Total Pb	ppm	10	100	< RL
T006	M013-1	Total Pb	ppm	10	100	< RL
T007	M012-3	Total Pb	ppm	10	100	< RL

Abbreviation: < = less than
RL = Reporting Limit
ppm = parts per million

3. Phthalates

Test Method: CPSC-CH-C1001-09.3

Test result

				Test No.	T001	T002	T003	T004
				Material No.	M003	M002	M004	M013-1
Test Parameter	CAS NO	Unit	RL	Customer's Requirement	Result	Result	Result	Result
Dibutyl phthalate (DBP)	84-74-2	%	0.005	0.1	< RL	< RL	< RL	< RL
Benzylbutyl phthalate (BBP)	85-68-7	%	0.005	0.1	< RL	< RL	< RL	< RL
Diethylhexyl phthalate (DEHP)	117-81-7	%	0.005	0.1	< RL	< RL	< RL	< RL
Di-n-octyl phthalate (DNOP)	117-84-0	%	0.005	0.1	< RL	< RL	< RL	< RL
Diisononyl phthalate (DINP)	28553-12-0, 68515-48-0	%	0.005	0.1	< RL	< RL	< RL	< RL
Diisodecyl phthalate (DIDP)	26761-40-0, 68515-49-1	%	0.005	0.1	< RL	< RL	< RL	< RL
Di-n-hexyl phthalate (DnHP)	84-75-3	%	0.005	0.1	< RL	< RL	< RL	< RL

Abbreviation: < = less than
RL = Reporting Limit
% = percentage

Sample Declaration Form

Sample Declaration Form

Formaldehyde in Composite Wood Regulation
Forest Stewardship Council (FSC) Certification Requirement

Section A (Must be completed):

Sample Description: **Shelf**

Item Number: **KF330075**

Forest Stewardship Council (FSC) Certification Requirement

Is the wood used to produce this item sourced from any of the following regions?

☐ No

☐ Yes (If checked, FSC Certification is required.)

Angola	Djibouti	Laos	Paraguay
Bolivia	Ecuador	Liberia	Peru
Bulgaria	Equatorial Guinea	Madagascar	Republic of the Congo
Cambodia	Gabon	Malaysia	Romania
Cameroon	Ghana	Mexico	Thailand
Central African Republic	Guatemala	Mozambique	Vietnam
Columbia	Guyana	Myanmar	Zambia
Congo (DRC)	Honduras	Niger	
Cote d'Ivoire	Indonesia	Papua New Guinea	
The Amazon Rainforest	The Cerrado Region	The East Australia Region	The Gran Chaco Region

Compliance of Item to EPA TSCA Title VI / CARB Formaldehyde in Composite Wood Regulation is Required

Section B (Must be completed):

Indicate if Composite Wood is present in the item:

☐ No Composite Wood in the product (If checked, go directly to Section D.)

☑ Composite Wood is present in the product

Indicate if any of these are used anywhere in the item (If checked, go to Section C.):
☐ HWPW-VC ☐ HWPW-CC ☐ Particle Board ☐ MDF ☒ tMDF
☐ No Added Formaldehyde based Resin ☐ Ultra Low Emitting Formaldehyde Based Resin

☐ Curved or bent plywood is the only Composite Wood that is present. It is excluded from the definition of hardwood plywood and is not subject to the EPA TSCA Title VI / ATCM. (If checked, go directly to Section D.)

☐ Other exemption according to CARB ATCM or EPA TSCA: _____
(List exemption and go directly to Section D.)

Section C (Both fields under this section must be completed if composite wood is present except curved and bent plywood):

Identify the Mill(s) and Third Party Certifier(s) being used:

Third Party Certifier Name: SGS-CSTC Standards Technical Services Co., Ltd.(CARB TPC 47)

Third Party Certifier #: BJ/EPA/2020/04/1003

Mill Name: Zhangzhou Zhongfu New Material Co,Ltd

Indicate if any of the following are met:

- ☐ EPA TSCA Title VI / CARB Phase 2 emission limits
- ☐ ULEF (Ultra-low-emitting formaldehyde) requirements
- ☐ NAF (No-added formaldehyde) requirements

Section D (Must be completed):

Declaration of Approval (must be signed by the responsible Executive):

- The CARB and EPA TSCA Title VI regulations for Composite Wood is understood and all applicable rules have been met.
- The required sections of this form have been completed according to all the materials used in the product.
- If a Third Party Certifier is identified, it has been approved by CARB or EPA as required.

Signature of QA Manager **Liu Xiaoqiang** Date: **April 2nd, 2025**

Company Name: **Nanping Tanrui Furniture Co. , Ltd.**

Company Address: **No. 114, Tower Front Road, Huiyao Industrial Park, Jianyang District, Nanping, Fujian province**

TSCA certification

Certificate No. BJ/EPA/2020/04/1003

The Manufacturer

Zhangzhou Zhongfu New Material Co,Ltd.
漳州中福新材料有限公司

Shugang Road, Lingang Industrial Park, Zhangzhou, Fujian, China
中国福建省云霄县临港工业园疏港公路旁

for manufacturing of composite wood products listed below
has been certified by SGS-CSTC Standards Technical Services Co., Ltd.
as meeting section 40 CFR 770.15, Title VI, Toxic Substances Control Act.
Certification Model：Type test + initial factory inspection + surveillance after certification
Certification Scheme: PC-EPA-SP-001 EPA TSCA Composite Wood Products Certification

The Manufacturer demonstrates composite wood products listed below
complying with 40 CFR 770.10, Title VI, Toxic Substances Control Act.

Certified Composite Wood Product：Thin Medium Density Fiberboard
Specification：2.0mm/ 2.2mm/ 2.25mm/ 2.3mm/ 2.35mm/ 2.4mm/ 2.45mm/ 2.5mm/ 2.6mm/2.7mm/ 2.75mm/ 2.9mm/ 3.0mm/ 3.5mm/ 3.7mm/ 3.8mm/ 4.0mm/ 4.2mm/ 4.3mm/4.4mm/ 4.5mm/ 4.6mm/ 4.65mm/ 4.7mm/ 4.75mm/ 5.0mm/ 5.6mm/ 5.8mm/ 6.0mm

This certificate is for the composite wood products manufacturing at the production facility stated above. The production facility meets the quality assurance requirements stated in section 40 CFR 770.20-22, 40 CFR 770.24, 40 CFR 770.40 and 40 CFR 770.45, Title VI, Toxic Substance Control Act

This certificate is valid only if subsequent verification is conducted and the manufacturer continuously meet the requirements stated in sections, 40 CFR 770.20-22, 40 CFR 770.24, 40 CFR 770.40 and 40 CFR 770.45, Title VI, Toxic Substances Control Act

This certificate (Issue3) is issued on 2024-04-15
and valid until 2026-04-23

US EPA TSCA TITLE VI
www.sgs.com/epa

CNAS
中国认可
产品
PRODUCT
CNAS C033-P

Authorised by

Joe

Product Certification Center
SGS-CSTC Standards Technical Services Co., Ltd. (CARB TPC 47)
A-16F, Century Yuhui Mansion, No. 73, Fucheng Road, Beijing,China
t +(86)(10)6845 6699 www.sgsgroup.com.cn

Page 1 of 1

LoG for Mercury Inventory of TSCA

SUPPLIER CERTIFICATION OF TSCA COMPLIANCE FOR MERCURY INVENTORY
(For consumer product)

Date: 04/2025

SKU Number:	KF210284 、 KF260148 、 KF330075 、 KF390069 、 KF390113 、	Item Number:	KF210284 、 KF260148 、 KF330075 、 KF390069 、 KF390113 、
Model / Style No.:	KF210284、KF260148、KF330075、KF390069、KF390113、KF590007		
Product Description:	Shelf		
Declare Company Name:	Zhejiang Tianqi International Trade Group Co., LTD		
Address:	602-1, Building 1, Headquarters, 555 Middle Rili Road, Yinzhou District, Ningbo City, Zhejiang Province		

On June 27, 2018, EPA published in the Federal Register a final rule to require reporting from persons who manufacture (including import) mercury or mercury-added products, or otherwise intentionally use mercury in a manufacturing process. The information collected through the reporting requirements are used to develop an inventory of mercury supply, use, and trade in the United States. Based on the information collected, the Agency will identify any manufacturing processes or products that intentionally add mercury and recommend actions to achieve further reductions in mercury use.

The undersigned hereby certifies that the following materials either comply with the Toxic Substance Control Act (TSCA) or not subject to TSCA requirements:
Print, Coating, Inks, Paints, Pigments, Soft Plastics (Including Synthetic Leather), Hard Plastics, Metal, Ceramic, Glass.

☒ We hereby declare that the product specified above is not mercury or mercury-added product, and mercury has not been intentionally used in any manufacturing processes.

☐ We hereby declare that the product specified above is mercury or does contain mercury, or intentionally use mercury in manufacturing process.

Company: Zhejiang Tianqi International Trade Group Co., LTD

Authorized Company Representative Name: Abel Li

Representative Position: MANAGER

Representative Email: lixun3478@timechee.com

Signature:

LoG for US EPA High-priority substances for risk evaluation under TSCA Declaration

SUPPLIER CERTIFICATION OF EPA FIRST 10 CHEMICALS AND HIGH-PRIORITY SUBSTANCES FOR RISK EVALUATION UNDER TSCA (For consumer product)

Date: 04/2025

SKU Number:	KF210284、KF260148、KF330075、KF390069、KF390113、	Item Number:	KF210284、KF260148、KF330075、KF390069、KF390113、
Model / Style No.:	KF210284、KF260148、KF330075、KF390069、KF390113、KF590007		
Product Description:	Shelf		
Declare Company Name:	Zhejiang Tianqi International Trade Group Co., LTD		
Address:	602-1, Building 1, Headquarters, 555 Middle Rili Road, Yinzhou District, Ningbo City, Zhejiang Province		

1, Under TSCA EPA is now required to evaluate existing chemicals to determine whether they "present an unreasonable risk of injury to health or the environment." The Agency will start the risk evaluation process for these first 10 chemicals and within six months release a scoping document for each chemical which includes the hazard(s), exposure(s), conditions of use, and the potentially exposed or susceptible subpopulation(s) the Agency plans to consider for the evaluation.

1, EPA First 10 Chemicals under TSCA:

No.	Chemical Name	CAS Number
1	1,4-Dioxane	123-91-1
2	1-Bromopropane	106-94-5
3	Asbestos	-
4	Carbon Tetrachloride	56-23-5
5	Cyclic Aliphatic Bromide (HBCD)	-
6	Methylene chloride (MC)	75-09-2
7	N-methylpyrrolidone (NMP)	872-50-4
8	Pigment Violet 29 (Anthra[2,1,9-def: 6,5,10-d'e'f'] diisoquinoline-1,3,8,10(2H,9H)-tetrone)	81-33-4
9	Trichloroethylene (TCE)	79-01-6
10	Tetrachloroethylene (Perchloroethylene)	127-18-4

2, On December 20, 2019, EPA finalized the designation of 20 chemical substances as a high-priority for risk evaluation under TSCA. This was the final step of the prioritization process initiated on March 20, 2019. These chemicals will move through the process required by TSCA to evaluate any unreasonable risks they may present to human health or the environment.

2, EPA High-Priority Substances for risk evaluation under TSCA:

No.	Chemical Name	CAS Number

1	1,4-Dichlorobenzene	106-46-7
2	1,2-Dichloroethane	107-06-2
3	trans-1,2-Dichloroethylene	156-60-5
4	1,2-Dichlorobenzene	95-50-1
5	1,1,2-Trichloroethane	79-00-5
6	1,2-Dichloropropane	78-87-5
7	1,1-Dichloroethane	75-34-3
8	Di-n-butyl phthalate (DBP) (Dibutyl phthalate)	84-74-2
9	Benzyl butyl phthalate (BBP)	85-68-7
10	Bis(2-ethylhexyl) phthalate (DEHP)	117-81-7
11	Diisobutyl phthalate (DIBP)	84-69-5
12	Dicyclohexyl phthalate (DCHP)	84-61-7
13	Tetrabromobisphenol A (TBBPA)	79-94-7
14	Tris(2-chloroethyl) phosphate (TCEP)	115-96-8
15	Triphenyl phosphate (TPP)	115-86-6
16	1,2-Dibromoethane	106-93-4
17	1,3-Butadiene	106-99-0
18	1,3,4,6,7,8-Hexahydro-4,6,6,7,8,8-hexamethylcyclopenta[g]-2-benzopyran (HHCB)	1222-05-5
19	Formaldehyde	50-00-0
20	Phthalic anhydride	85-44-9

☐ We hereby declare that the product specified above doesn't contain substances that is mentioned above.

Company: Zhejiang Tiangi International Trade Group Co., LTD

Authorized Company Representative Name: Abel Li

Representative Position: MANAGER

Representative Email: lixun3478@timechee.com

Signature:

LoG for US EPA Persistent, Bioaccumulative, and Toxic (PBT)

SUPPLIER CERTIFICATION OF US EPA Persistent, Bioaccumulative, and Toxic (PBT) Chemicals under TSCA
(For consumer product)

Date: 04/2025

SKU Number:	KF210284、KF260148、KF330075、KF390069、KF390113、	Item Number:	KF210284、KF260148、KF330075、KF390069、KF390113、
Model / Style No.:	KF210284、KF260148、KF330075、KF390069、KF390113、KF590007		
Product Description:	Shelf		
Declare Company Name:	Zhejiang Tianqi International Trade Group Co., LTD		
Address:	602-1, Building 1, Headquarters, 555 Middle Rili Road, Yinzhou District, Ningbo City, Zhejiang Province		

As required under the Toxic Substances Control Act (TSCA), as amended by the Frank R. Lautenberg Chemical Safety for the 21st Century Act, EPA issued five final rules in December 2020 to reduce exposures to certain chemicals that are persistent, bioaccumulative and toxic (PBT). These chemicals build up in the environment over time and can therefore have potential risks for exposed populations, including the general population, consumers and commercial users, and susceptible subpopulations (such as workers, subsistence fishers, tribes and children).

US EPA Limit:
Deca-BDE
• March 8, 2021 – manufacturing and processing of Deca-BDE or Deca-BDE containing products/articles
Limit – prohibited
• January 6, 2022 – Distribution into commerce of Deca-BDE or Deca-BDE containing products/articles
Limit – prohibited

PIP (3:1)
• October 24, 2024– processing and distribution into commerce of PIP (3:1) or PIP (3:1) containing products/articles
Limit – prohibited

2,4,6-TTBP
• January 6, 2026 – Distribution into commerce of TTBP or TTBP in containers with a volume less than 35 gallons.
Limit - ≤ 0.3% by weight in any container with a volume of less than 35 gallons
• January 6, 2026 –processing and distribution in commerce of 2,4,6-TTBP oil and lubricant additives

Limit - ≤ 0.3% by weight

TTBP
• January 6, 2026 – Distribution into commerce of TTBP or TTBP containing products
Limit - ≤ 0.3% by weight in any container with a volume of less than 35 gallons

HCBD
• March 8, 2021 – manufacturing, processing and distribution into commerce of HCBD or HCBD containing products/articles
Limit – prohibited

PCTP
• March 8, 2021 – manufacturing and processing of PCTP or PCTP containing products/articles
Limit - ≤ 1% by weight

• January 6, 2022 – distribution into commerce of PCTP or PCTP containing products/articles
Limit - ≤ 1% by weight

☒ We hereby declare that the product specified above doesn't contain substances that is mentioned above.

☐ We hereby declare that the product specified above does contain substances that is mentioned above, (substance name)_____, the content is below limit required by TSCA.

Company: Zhejiang Tianqi International Trade Group Co., LTD

Authorized Company Representative Name: Abel Li

Representative Position: MANAGER

Representative Email: lixun3478@timechee.com

Signature: _____

---End of test report---