GLACIER BAY®

Replacement Parts List

4 in. Centerset 2-Handle High-Arc Bathroom Faucet in Brushed Nickel

MODEL	SKU #	FINISH
67703W-6004	206777986	Brushed Nickel

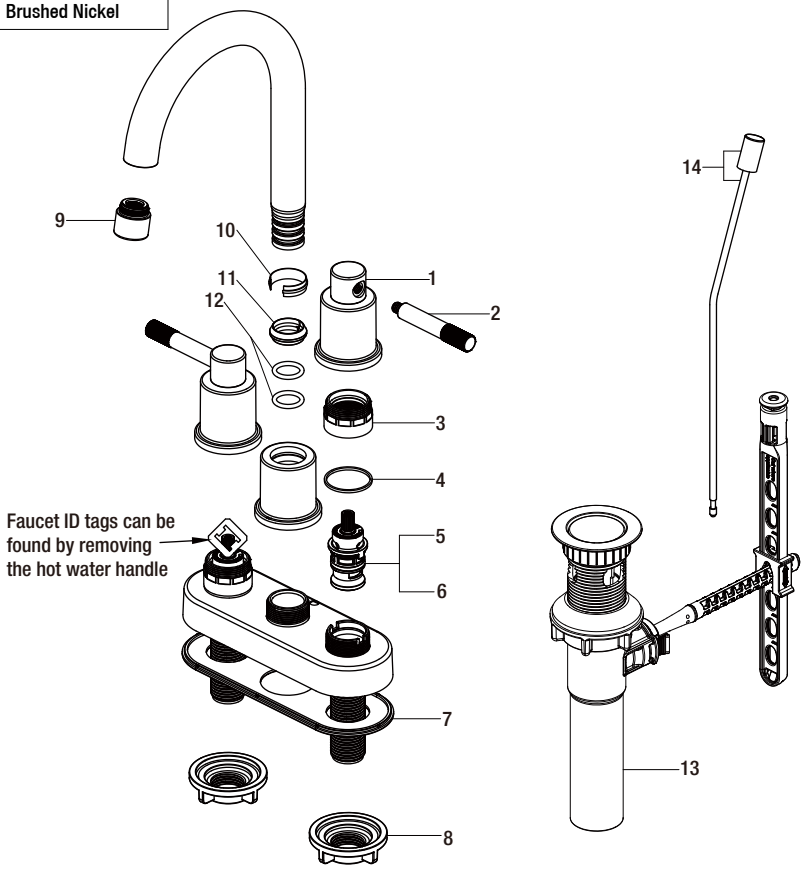

Many replacement parts can be purchased online or at your local store. Please use the table below to identify the part SKU number needed, go to HOMEDEPOT.COM, and check for online and store availability. If you can't find the part you are looking for, please call 1-855-HD-GLACIER.

Part	Description	Part #	Internet SKU #	Store SKU #
1	Handle seat	RP1716104		
2	Handle	RP1347104		
3	Bonnet nut	RP70272		
4	Washer	RP64123		
5	Cartridge H	RP20079		
6	Cartridge C	RP20080		
7	Gasket	RP80555		
8	Mounting nut	RP56001	203193994	579276

Part	Description	Part #	Internet SKU #	Store SKU #
9	Aerator	RP3024804		
10	Wearable ring	RP70077		
11	Clip	RP70023		
12	O-ring	RP60008		
13	ClickInstall™ drain assembly	RP4022804		
14	Lift rod	RP4024904		