NO POWER OOPS WITH OUPES

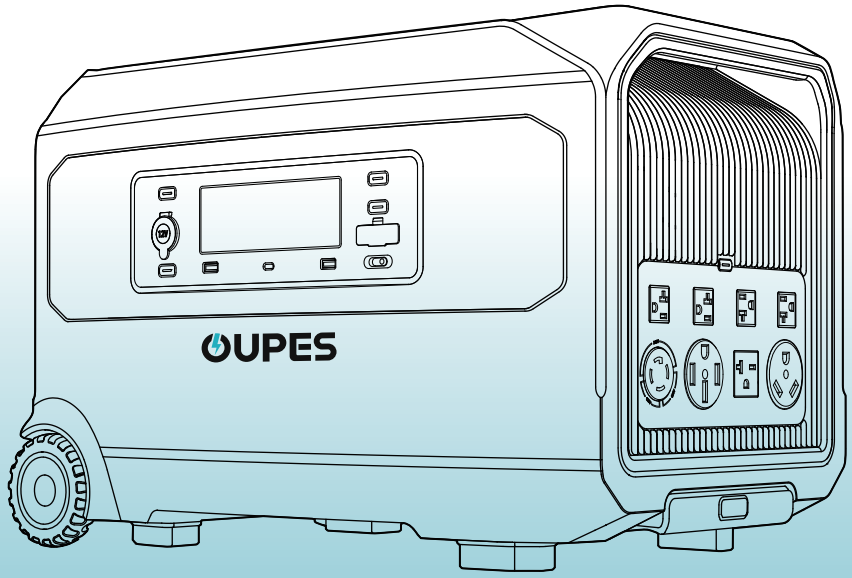

User Manual

Guardian 6000

Customer service

Call Us: +1(209)400-9909(US)
Email Us: support@oupes.com(US)
Website: www.oupes.com

Version: OPS-HP6000-N-V1.3

Contents

Disclaimer **01**

Safety Instruction **02-04**

- Preparation Before Use 02
- Device Compatibility and Precautions 02-03
- Common Mistakes and How to Avoid Them 03
- Usage Scenarios and Precautions 04

Product List **05**

Product Description **06-08**

- Specifications 06
- Overview 07
- LCD Screen 08

Instructions for Use **09-10**

- Power Your Loads 09
- XT90 Output 12V/24V Slide Switch 10

Recharge Methods **11-13**

- AC Charging 11
- AC Input Over Current Protection 11
- AC Input Speed Switch 12
- Solar Charging 12
- Cigarette Lighter Charging 13
- Extra Battery Charging 13

EPS(Emergency Power Supply) Function **14**

Error Code & Trouble Shooting **15-16**

FAQ(Frequently Asked Question) **17**

Certification and Compliance **17-18**

Disclaimer

Before using this product, please read this user manual carefully to ensure that you fully understand the product and can use it correctly. After reading this user manual, please keep it in a safe place for future reference. Improper use of this product may cause serious injury to yourself or others, or result in product damage and property loss. By using this product, you are deemed to have understood, recognized and accepted all the terms and contents of this document. The Company shall not be responsible for any damages caused by the user's failure to use this product in accordance with this user manual.

In accordance with laws and regulations, the company reserves the right of final interpretation of this document and all documents related to this product. This document is subject to change, update, revision or termination without notice.

Please visit our website for the latest product information.

●The company shall not be held responsible for any damage caused by force majeure(e.g. fire, typhoon, flood, earthquake) or use under other abnormal circumstances by the customer.

●The company bears no responsibility for loss caused by the use of non-standard connectors.

●The company shall not be liable for any damage caused by non-compliance with the standard operation.

●Please do not disassemble the product. Otherwise, the warranty will be voided.

Safety Instruction

Preparation Before Use

1.1 Read the User Manual

Carefully review the user manual provided with the device to understand the power station's interface functions, rated power, supported device types, and usage methods. Pay special attention to the rated power and output voltage of each interface to ensure compatibility with connected devices.

1.2 Device Inspection

Before use, inspect the power station and accessories to ensure they are intact, with no exposed wires or damaged interfaces.
Confirm that all interfaces are dry and clean.

Device Compatibility and Precautions

2.1 Matching Power Specifications

Verify that your device's rated power matches the power station's output. Examples include:

- USB-C Interface: Suitable for small portable devices like smartphones and tablets (e.g., iPad).
- Car Charger Interface: Avoid connecting sensitive devices like radios.
- AC Socket: Designed for high-power devices like TVs or sound systems, but the power must be within the station's rated output.

2.2 Avoid Simultaneous Connection of High-Power and Sensitive Devices

Do not connect high-power devices (e.g., refrigerators, induction cookers) and sensitive equipment (e.g., TVs) at the same time to prevent voltage fluctuations that could damage the devices.
Do not use the power station to power medical equipment and precision instrument.

Device Compatibility and Precautions

2.3 Special Note: List of Sensitive Devices

Devices sensitive to voltage fluctuations include:

- High-end TVs (OLED, 4K)
- High-end sound systems
- Tablets like iPads
- Cameras and drones

For these devices, use them individually and ensure proper interface matching.

Common Mistakes and How to Avoid Them

3.1 Using the Wrong Interface, Causing Device Damage

- Error Example: Using the car charger port for powering voltage-sensitive devices (e.g., radios).
- Precautionary Measures:
  - Check the device's power requirements (wattage, voltage).
  - Connect to the correct interface.

3.2 Damage Due to Instant Voltage Fluctuations

- Error Example: Keeping sensitive devices connected while turning the power station on or off.
- Precautionary Measures: Disconnect devices before powering the station on or off.

3.3 Overloading the Power Station

- Error Example: Powering multiple high-power devices simultaneously, exceeding the station's power limit.
- Solution: Check the station's rated power and plan device usage accordingly.

Usage Scenarios and Precautions

4.1 Charging via the car charger

●Do not charge devices via the car charger interface when the vehicle is starting or stopping to avoid voltage spikes.

●Ensure the device's power aligns with the station's output specifications when using the car charger interface.

4.2 Indoor Use

●For TVs, sound systems, and other devices in EPS mode, ensure the input source is grid power or a pure sine wave generator.

4.3 Outdoor Use

●Keep the power station away from water, dust, and extreme temperatures.

●Regularly clean interfaces and power cables after outdoor use.

APP

You can connect this product via APP to view information, control the device and personalize settings.

Scan the QR code to down-load our Smart Control APP.

Available On App Store

Available On Google Play

What's in the Box

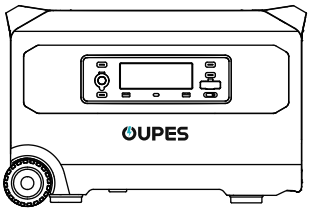

Power Station*1

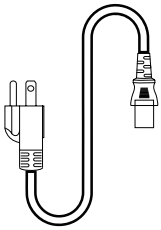

AC Charging Cable *1

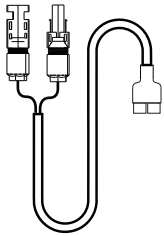

MC4 to Anderson Cable *1



Accessory Bag *1

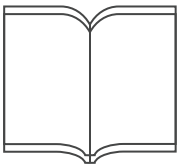

User Manual*1

Specifications

Output	
AC Output	120V/3600W & 240V/6000W 50Hz/60Hz Boost Mode: 7200W; Surge: 9000W; Bypass Mode: 2400W
Cigarette Lighter Output	12V10A 120W
USB-A Output	5V3A; 9V2A; 12V1.5A 18W Max
USB-C Output	5V3A; 9V3A; 12V3A; 15V3A; 20V5A; 28V5A 140W Max
XT90 Output	12V30A/24V20A
Input	
AC Input	90V~140V 50Hz/60Hz 20A Max 1800W Max 200V~240V 50Hz/60Hz 20A Max 3600W Max
Solar Input	12V~140V MPPT: 18V~130V 15A Max 2100W Max
Cigarette Lighter Input	12V~15V 8.5A Max
General Info	
Battery Capacity	4608Wh(51.2V/90Ah)
Battery Type	LiFePO4
Working Temperature	32°F~104°F(0°C~40°C)
Storage Temperature	-4°F~140°F(-20°C~60°C)
Dimension	Approx. 24.94*16.24*16.81in(633.57*412.52*426.96mm)
Net Weight	Approx.111.33lb(50.5kg)

Product Description

Overview

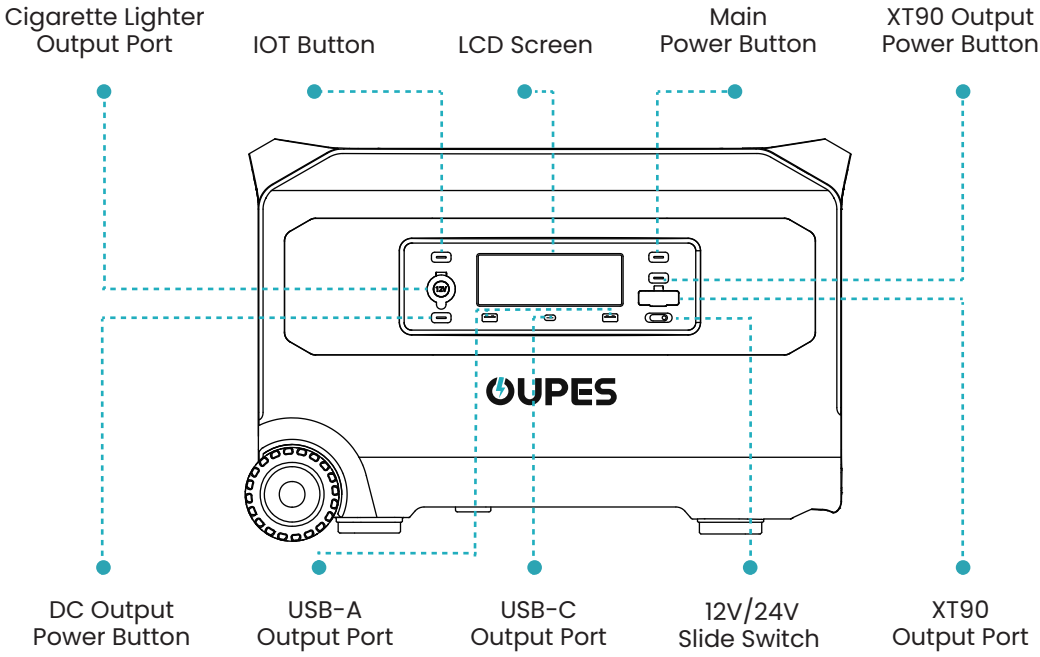

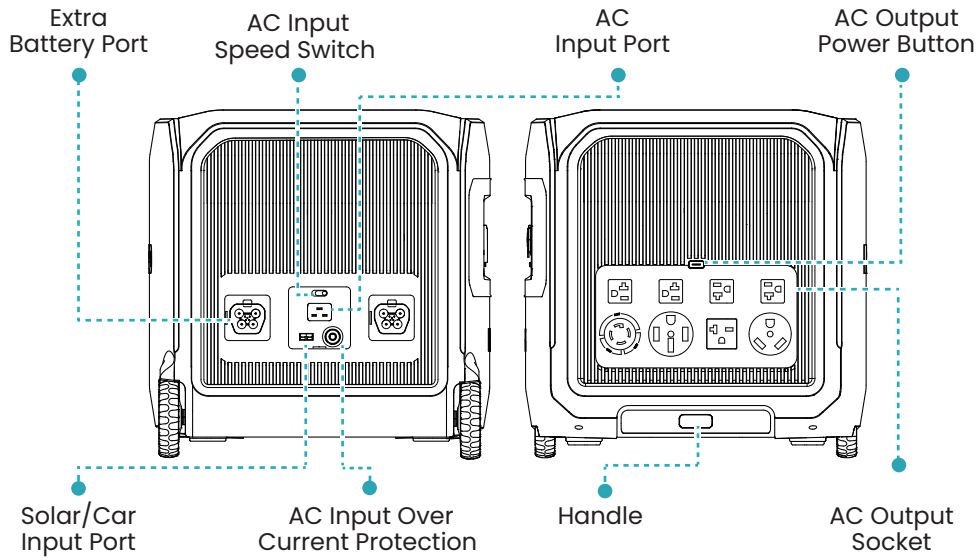

Product Description

LCD Screen

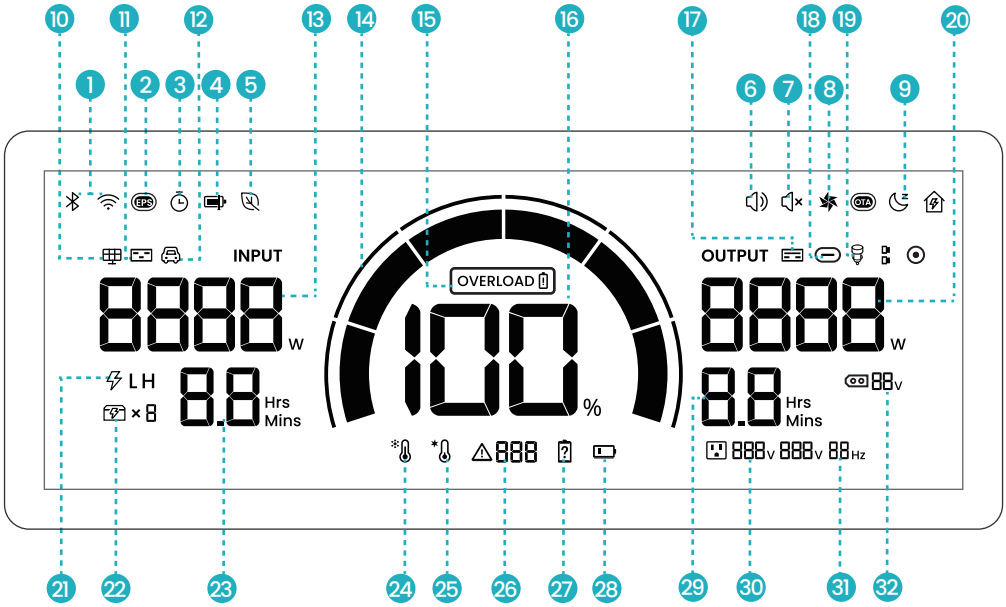

1.	Bluetooth&WiFi	12.	Car Input	23.	Charge Time Left
2.	EPS	13. INPUT	Input Power	24.	High Temp
3.	TOU	14.	BAT Arc	25.	Low Temp
4.	Charge-Discharge Limit	15. OVERLOAD	Output Overload	26.	Error Code
5.	Backup Power	16.	BAT Percentage	27.	BAT Error
6.	Sound	17.	USB-A Output	28.	Low BAT
7.	Mute	18.	USB-C Output	29.	Runtime
8.	Fan	19.	Cigarette Lighter	30.	AC Output Volt
9.	Night Mode	20. OUTPUT	Output Power	31.	AC Output Frequency
10.	Solar Input	21. LH	Fast&Slow Charge	32.	XT90 Output Volt
11.	AC Input	22. ×	Extra BAT QTY		

Notice: Unlabeled Icons are unsupported in this model.

Power Your Loads

a）Press and hold the main power button for 3 seconds to turn on the main power.

b）Short press AC/DC output power button to turn on AC/DC output power.

c）Connect your loads to the power station and start powering.

d）Disconnect your loads and press AC/DC output power button to turn off the AC/DC power after using.

e）Press and hold the main power button for 3 seconds to turn off the power station completely.

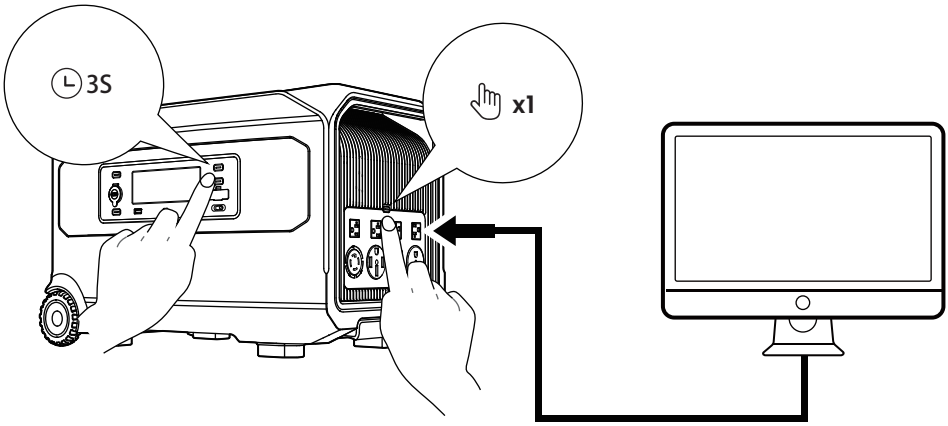

XT90 Output 12V/24V Slide Switch

a) Slide the switch left to enable 12V30A output.

b) Slide the switch right to enable 24V20A output.

c) When the main power is on, short press XT90 output power button to turn XT90 output power on.

d) When XT90 output power is on, voltage can not be switched.

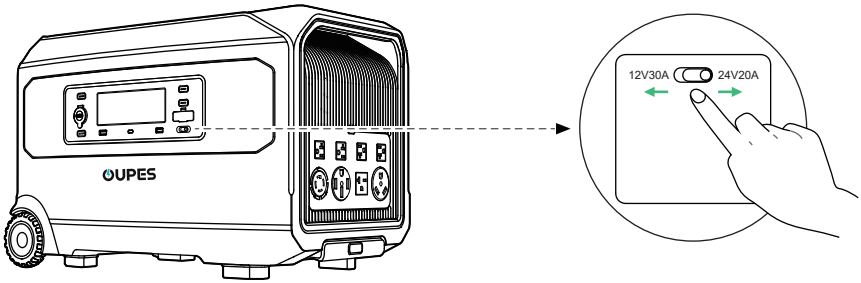

Recharge Methods

AC Charging

Use AC charging cable to connect the power station to an AC wall outlet.

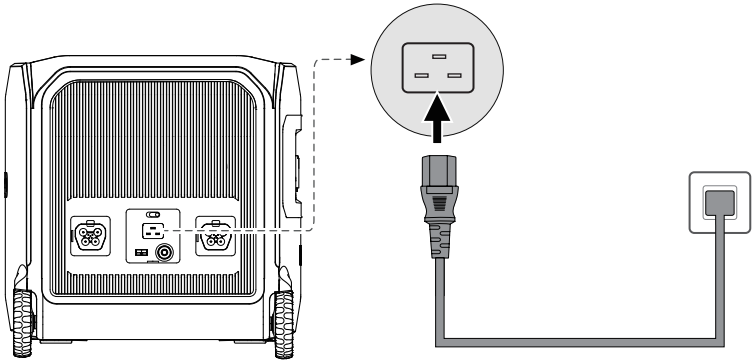

AC Input Over Current Protection

a）If AC input exceeds 25A, the protector will pop out.

b）Please disconnect all the connections for safety reason, and ensure that the input current is below 25A. Then, press the protector button to resume charging.

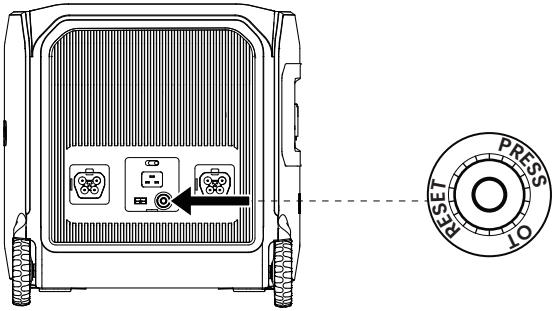

AC Input Speed Switch

a) Do not adjust charging speed when charging the power station.

b) Slide the switch left to enable maximum charging speed.

c) Slide the switch right, the charging speed will back to the default value, which can be adjusted on the APP.

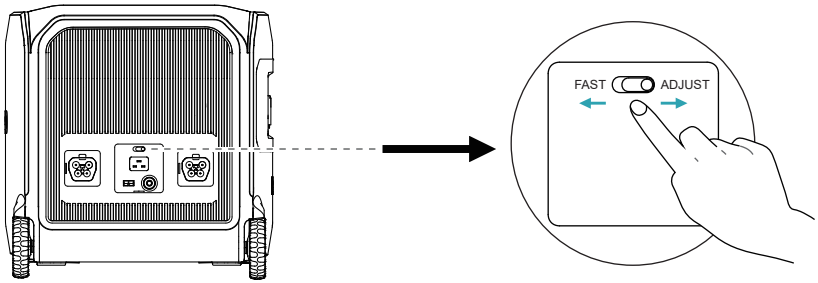

Notice: Slow charging recommended. Fast charge only if required.

Solar Charging

a) Use MC4 to Anderson charging cable to connect solar panels to the power station.

b) Connect 5*240W solar panels at most in series to get maximum power.

c) Make sure the solar panels meet the following requirements:

OCV: 140V; Current: 15A; Max Power: 2100W

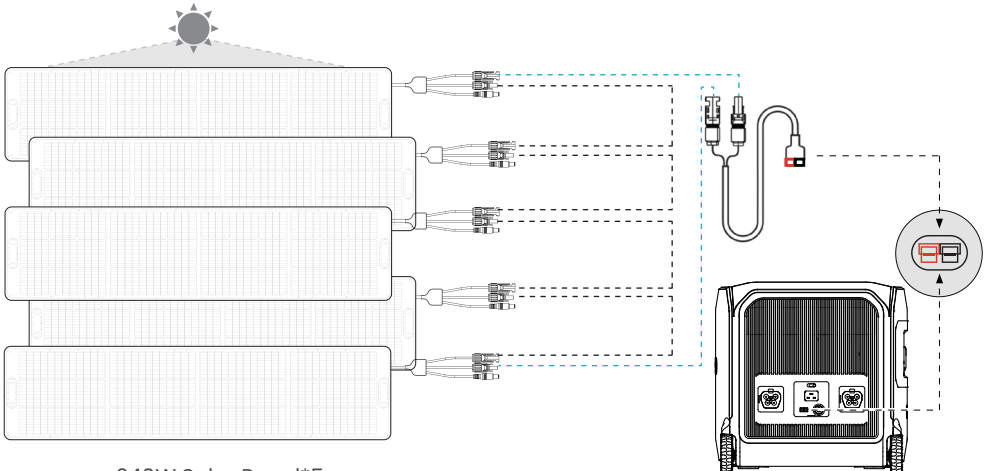

240W Solar Panel*5

Cigarette Lighter Charging

a）The cigarette lighter port supports 12V~15V, 8.5A car charging input.

b）Start the car first, then connect the cable and cigarette lighter. Make sure they're in good connection.

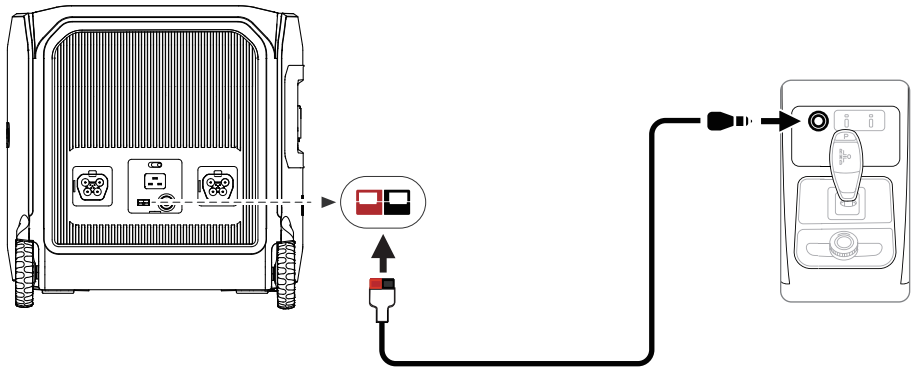

Extra Battery Charging

a）Turn off the power station and the extra battery before connecting or disconnecting them.

b）Use battery expansion cable to connect the extra battery to the power station.

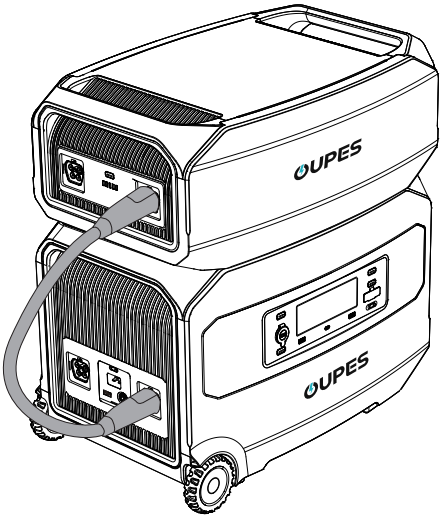

EPS(Emergency Power Supply) Function

a）EPS function is enabled by default with a 20ms switching when grid power is cut off.

b）Charge the power station from power grid and connect the device to AC output port as shown in the picture, then press AC output power button on.

c）Please do not connect the power station to equipment requiring 0ms uninterrupted power supply. Please test and make sure the device is compatible with EPS function.

d）The total input and output power should be below 2400W. Otherwise, the power station will shut down in 1 minute.

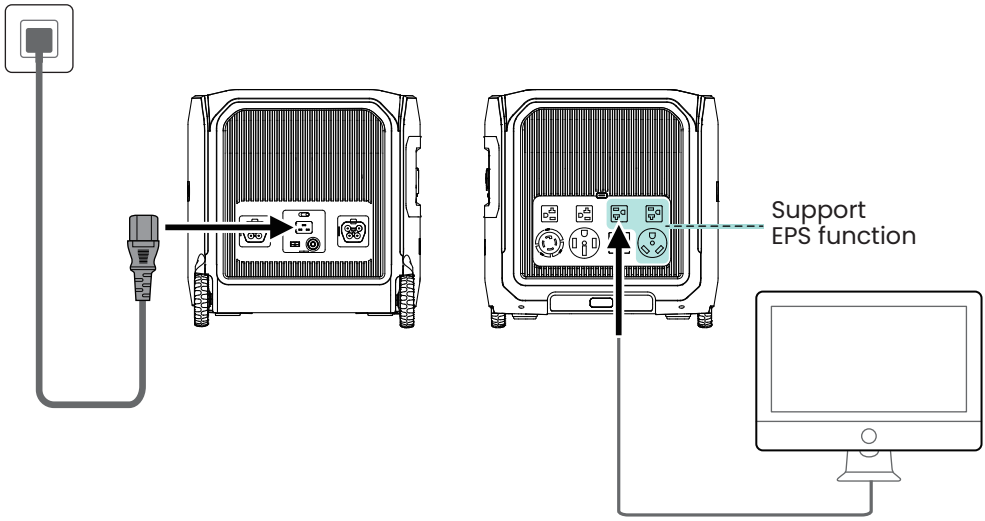

Notice: EPS function only takes effect when input voltage is 90V~140V.

Error Code & Trouble Shooting

Error Code	Status	Cause	Solution
E00	 flashing, no output	Short circuit of AC output.	Press the AC output power button to restore.
E01	 flashing, no output	Overload of AC output.	Press the AC output power button to restore.
E02	 flashing, no output	Battery voltage of inverter input is low.	Charge the device in time and restart the corresponding function button to restore.
E03	 flashing, no output	Over voltage and under voltage of AC output.	Press the AC output power button to restore.
E04	 flashing, no input	Abnormal AC input frequency.	Automactically restores after frequency returning to normal.
E05	 flashing, no output	High and low bus voltage.	Press the AC output power button to restore.
E06	 flashing, no output	Over temperature of Inverter.	Turn off output power and rest the device to restore.
E08	 flashing, no output	Overload and short circuit of DC 12V port.	Press the XT 90 output power button to restore.
E09	 flashing, no output	Overload and short circuit of DC 24V port.	Press the XT 90 output power button to restore.
E10	 flashing, no output	Overload and short circuit of the cigarette lighter output port.	Press the DC output power button to restore.
E11	 flashing, no output	Overload and short circuit of the USB-A port.	Press the DC output power button to restore.
E12	 flashing, no output	Overload of the USB-C port.	press the DC output button to restore.
E15	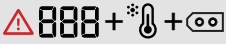 flashing, no output	Over temperature of XT90 output when solar charging is on.	Press the XT90 output power button to restore.

Error Code & Trouble Shooting

Error Code	Status	Cause	Solution
E17	⚠ 888 +  flashing, no output	①Inverter hardware is abnormal.	Turn on AC power again after turning off main power for 5 minutes.
	⚠ 888 + 	②PV board NTC is abnormal.	Restart the power station.
E18	⚠ 888 +  flashing, no input	High voltage and low voltage of AC input.	The device will automatically return to normal when the AC input voltage returns to normal.
E21	⚠ 888 + flashing	Over voltage of single battery cell.	Stop charging and discharge until the battery voltage returns to normal.
E22	⚠ 888 +  flashing, no output	Low Voltage of single battery cell.	Charge the device until the voltage returns to normal.
E23	⚠ 888 + flashing	Battery total voltage is too high.	Stop charging and start discharging until the battery voltage returns to normal.
E24	⚠ 888 +  flashing, no output	Battery total voltage is too low.	Charge the device until the voltage returns to normal.
E25	⚠ 888 +  flashing, no output	High temperature of battery.	The device will automatically return to normal when the temperature returns to normal.
E26	⚠ 888 +  flashing, no output	Low temperature of battery.	The device will automatically return to normal when the temperature returns to normal.
E28	⚠ 888 +  flashing, no input	Charge over temperature.	Charge the device after the temperature returning to normal.
E29	⚠ 888 +  flashing, no input	Over temperature of MOSFET.	Turning on input power after the temperature returning to normal.

If the issue persists, contact support.

FAQ

Scan QC code for FAQ.

Certification and Compliance

FCC Warning

This device complies with part 15 of the FCC Rules. Operation is subject to the following two conditions: (1)This device may not cause harmful interference, and (2) this device must accept any interference received, including interference that may cause undesired operation. Any changes or modifications not expressly approved by the party responsible for compliance could void the user's authority to operate the equipment.

FCC Warning

Notice:

This equipment has been tested and found to comply with the limits for a Class B digital device, pursuant to part 15 of the FCC Rules. These limits are designed to provide reasonable protection against harmful interference in a residential installation. This equipment generates uses and can radiate radio frequency energy and, if not installed and used in accordance with the instructions, may cause harmful interference to radio communications. However, there is no guarantee that interference will not occur in a particular installation. If this equipment does cause harmful interference to radio or television reception, which can be determined by turning the equipment off and on, the user is encouraged to try to correct the interference by one or more of the following measures:

(1)Reorient or relocate the receiving antenna.

(2)Increase the separation between the equipment and receiver.

(3)Connect the equipment into an outlet on a circuit different from that to which the receiver is connected.

(4)Consult the dealer or an experienced radio/TV technician for help.

This equipment complies with FCC radiation exposure limits set forth for an uncontrolled environment.

This equipment should be installed and operated with minimum distance 20cm between the radiator & your body.



NO POWER OOPS WITH OUPES