INSTALLATION INSTRUCTIONS

Item#5793 (New. 08/29/2013)

READ AND SAVE THESE INSTRUCTIONS

WARNING! SHUT POWER OFF AT FUSE OR CIRCUIT BREAKER.

AVERTISSEMENT! COUPER LE COURANT AU NIVEAU DES FUSIBLES OU DU DISJONCTEUR.

MOUNTING THE FIXTURE (Fig.1)

1. Shut off the power at the fuse box or circuit breaker. If necessary, remove the old fixture including the mounting hardware.
2. Carefully remove the fixture from the carton and check that all parts are included as shown in the illustration.
3. Attach mounting plate (A) to the outlet box using two mounting screws (B) (Size: #8-32N*L0.5”). The side of the mounting plate marked “GND” must face out.

CONNECTING THE WIRES (Fig. 2)

4. At this point, connect the electrical wires as shown in Fig. 2, making sure that all wire connectors are secured. If your outlet box has a ground wire (green or bare copper), connect the fixture’s ground wire to it. Otherwise, connect the fixture’s ground wire directly to the mounting plate using the green screw provided. After the wires are connected, tuck them carefully inside the outlet box.

FINISHING THE INSTALLATION (Fig.1)

5. Place fixture body (D) over the mounting plate (A) and secure it with screws (C).
6. While adjusting the decorative arms to a proper position, insert the ends of the arms into the holes of the metal ring (E). (Note: The holes are near the edge of ring mounted face down.)
7. Place the glass shade (F) over the socket on the fixture body (D) and secure with socket ring (G).
8. Install the light bulb(s) (not included) in accordance with fixture’s specifications. **(DO NOT EXCEED THE MAXIMUM WATTAGE RATING!) (NE PAS DEPASSER LA PUISSANCE NOMINALE MAXIMALE!)**

Your installation is now complete. Return power to the outlet box and test the fixture.

Note: Illustration (Fig.1) on this manual is for installation purposes only. It may or may not be identical to the fixture purchased.

Fig. 1

Set# A-021-200108
-Mounting Plate
-Ground screw
-Mounting Screw*2

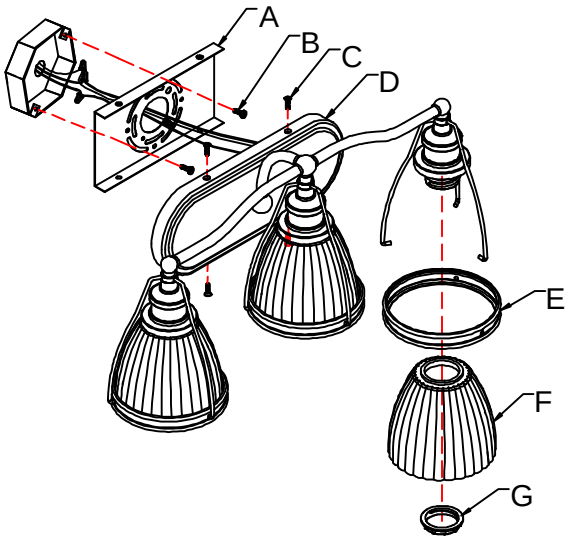

Socket Ring # SKT-RING-26

Fig. 2

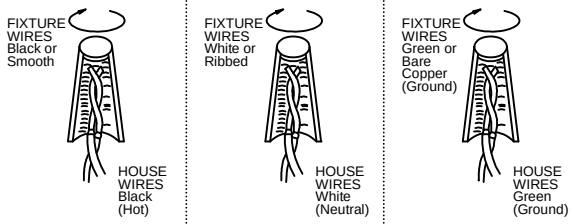

Intertek

american lighting association