ITEM# Janet
(Dining Table)

ASSEMBLY INSTRUCTIONS

Best Master Furniture™
The Imported Furniture Specialist

Please read instructions carefully

Remove all wrapping materials, staples and packing straps from the carton. Refer to Parts List and Hardware List and ensure they are complete before you start assembling. Place all wooden parts on a clean, flat and soft surface (e.g carpet or rug) to prevent parts from being scratched.

CAUTIONS: 1) DO NOT FULLY TIGHTEN BOLTS AND NUTS UNTIL ALL PARTS HAVE BEEN ASSEMBLED.
2) DO NOT OVER-TIGHTEN BOLTS AND NUTS AS IT MAY DAMAGE THE SCREW RHREAD.
3) KEEP ALL HARDWARE PARTS OUT OF REACH OF CHILDREN.

PARTS LIST (FOR 1 NOS. OF TABLE)

NO.	COMPONENT	QTY.
P1	TABLE TOP WITH APRONS	1
P2	TABLE LEG	4

HARDWARE LIST (FOR 1 NOS. OF TABLE)

NO.	DESCRIPTION	QTY.
H1	JCBB SCREW M8 X 60	8
H2	SPRING WASHER	8
H3	FLAT WASHER	8
H4	ALLEN KEY	1

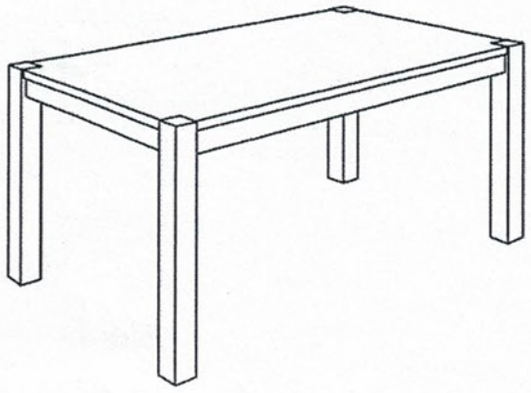

COMPLETE ASSEMBLY

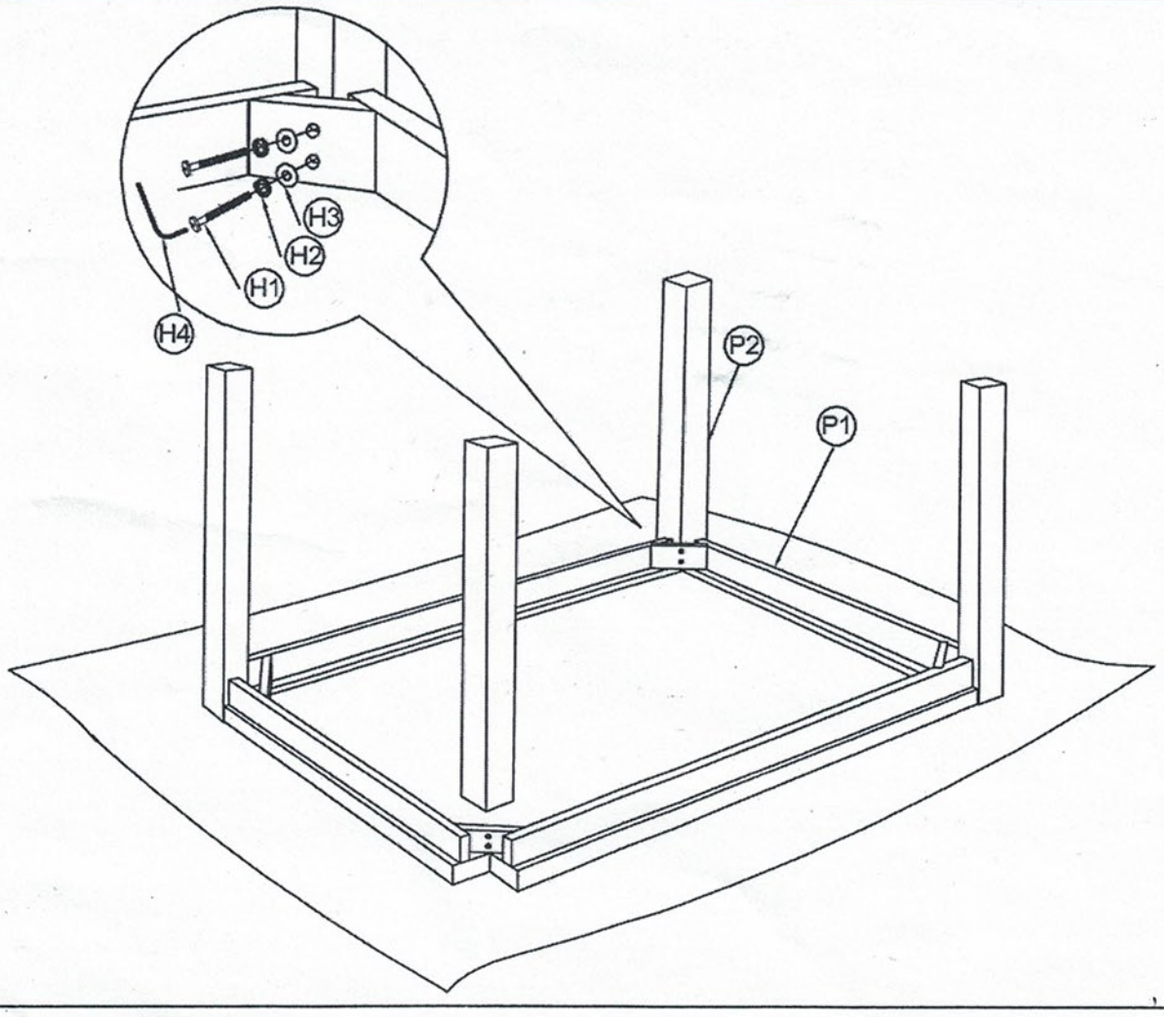

CARE AND MAINTENANCE

SAFETY - To avoid any risk of suffocation to children and animals, dispose off plastic bags immediately.
CLEANING - Clean with damp cloth and mild detergent. Do not use bleach or abrasive products.
FITTINGS - Tighten bolts and nuts from time to time to ensure all parts of product are securely fitted.
If any of the components are damaged or broken they should be removed from service.
Not for commercial use.