CLOSETMAID®

HeavyDuty

2 SHELF KIT (3 FT.)

01-82371-00 35354 02/20

INSTALLATION INSTRUCTIONS

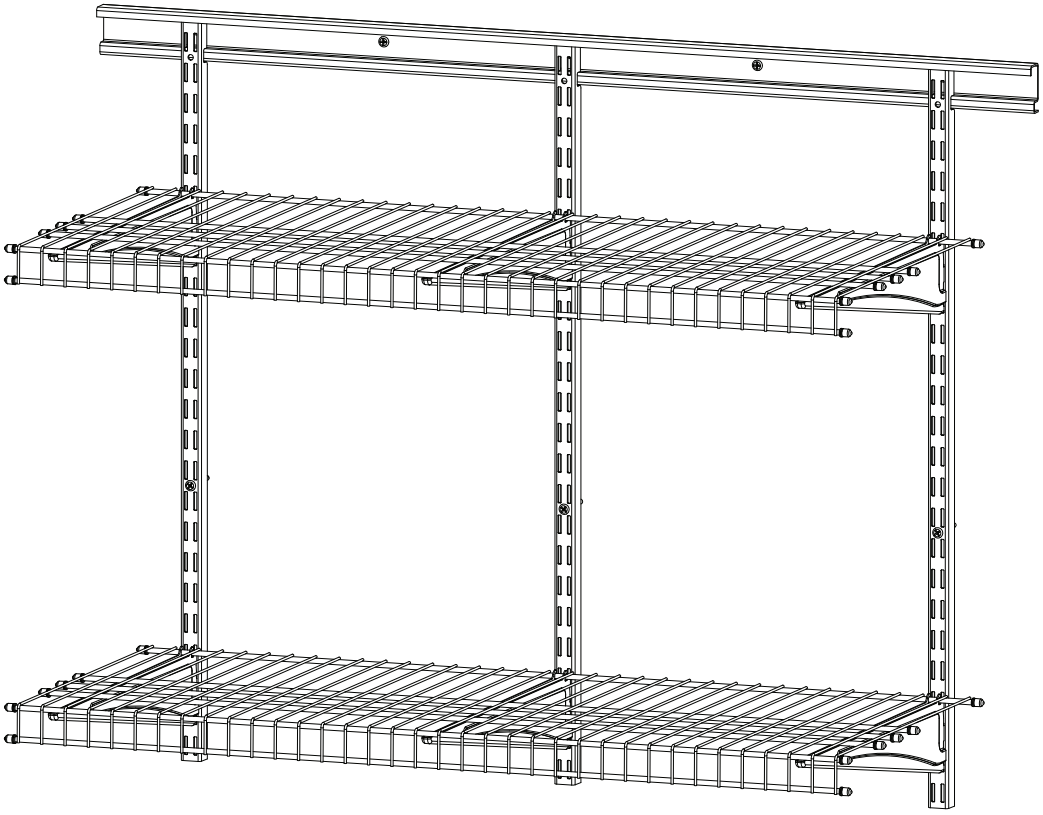

Whichever load reaches capacity first:

Maximum Shelving Load*: 100 lbs/ft
Maximum 40 in. Hang Track Load*: 700 lbs
Maximum System Load*: 600 lbs
(See pages 6)

**Static Load Evenly Distributed. Must be installed per manufacturer's specifications or weight load capacity does not apply.*

BEFORE BEGINNING

- Please read all instructions carefully.
- Familiarize yourself with all parts (see "PARTS INCLUDED WITH KIT") and check quantities.
- Follow all safety precautions (see "SAFETY PRECAUTIONS").
- **Follow all manufacturer installation requirements in order to comply with the advertised weight load specifications.**

What you will need:

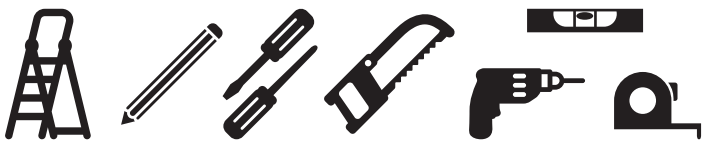

CLOSETMAID®

© 2026 The AMES Companies, Inc | Ocala, FL 34471 | 1-800-874-0008 | www.closetmaid.com

PARTS INCLUDED WITH KIT

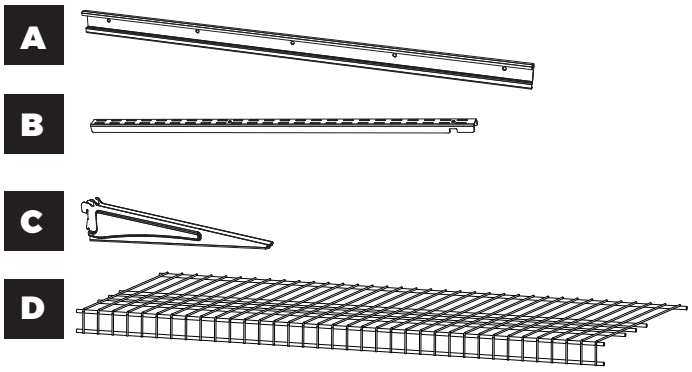

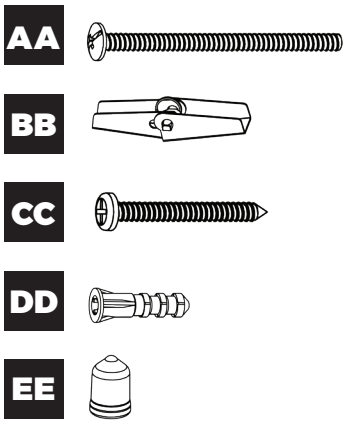

	Name	Size (Qty)	Part Number
A	Hang Track	40 in. (1)	75835
B	Standard	30 in. (3)	32231
C	Shelf Bracket	(6)	82369
D	Wire Shelf	36 in. (2)	53718
AA	Screw	3/16 in. (9)	90274
BB	Toggle Bolt	3/16 in. (9)	270
CC	Panhead Screw	#12 x 2 in. (9)	90688
DD	Anchor	1/4 in. (9)	650
EE	End Cap	(24)	90603

CLOSETMAID®

 © 2026 The AMES Companies, Inc | Ocala, FL 34471 | 1-800-874-0008 | www.closetmaid.com

WARNING

SAFETY PRECAUTIONS

- Unit **MUST** be installed as per the installation instructions beginning on page 5 to satisfy published weight load capacity.
- This unit contains small parts which could be a choking hazard for small children. Children should be under adult supervision at all times or serious injury could occur.
- Always unload unit prior to moving the unit. The weight of personal belongings can cause the unit to become unstable and either tip or collapse. Serious bodily injury and/or damage to personal belongings may occur.
- Do not overload unit. If any shelf, top, or bottom of unit bows or bends, it is overloaded. The shelf, top, or bottom could collapse and cause serious bodily injury and/or damage to personal belongings.
- Do not drop items on shelves.
- Do not climb or step on the unit. The unit may become unstable and either tip or collapse. Serious bodily injury and/or damage to personal belongings may occur.
- Do not mount or attach anything to the sides, rear, or front of the unit as this can create a force which can cause the unit to tip. Serious bodily injury and/or damage to personal belongings may occur.
- Follow proper safety procedures if using power tools and ladders.
- We recommend you protect your work surface during assembly to prevent scratching or damage to table tops, wood floors, etc.
- We recommend you tighten screws by hand. Use care not to overtighten if using power tools.



FOLLOW INSTRUCTIONS CAREFULLY

Please do not return product to the retail store. For product assistance and warranty information please call Consumer Affairs at 1-800-874-0008.

Manufacturer Warranty

Manufacturer will replace any missing or damaged part due to manufacturer defect for one year after purchase. Please have proof of purchase for warranty claims.

CLOSETMAID®

1 MEASURE AND FIT (WIDTH)



This organizer, and its components as purchased, require a wall space with a minimum width of 40 in. It can also be easily installed on a space wider than 40 in. However, if the wall space is smaller than 40 in., the hang track and possibly the shelves will require cutting.

Measure the width of the wall space. The hang track can be centered on the wall or flush to one side. If you want it to be centered, determine the center point of the wall by dividing the overall width by two, or if you want to have it flush to one side, position the hang track against one wall.

CAUTION: To avoid personal injury, use care and a safe, sturdy stepping stool to position hang track.

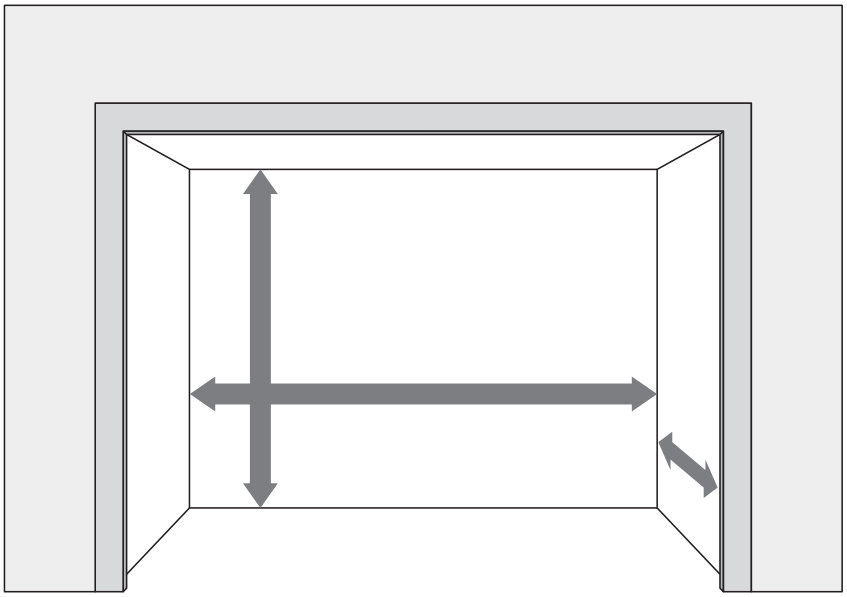

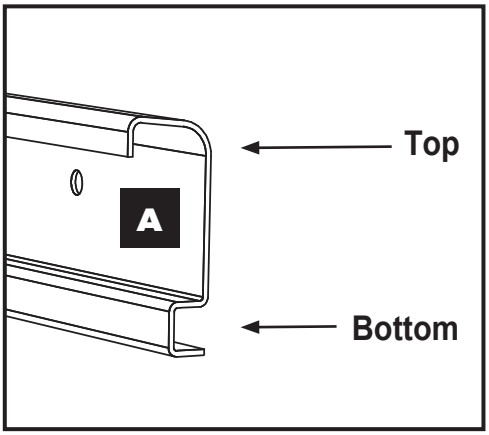

 © 2026 The AMES Companies, Inc | Ocala, FL 34471 | 1-800-874-0008 | www.closetmaid.com

WARNING

SAFETY PRECAUTIONS
RECOMMENDED INSTALLATION

The following installation is required to satisfy the weight capacity rating indicated for this product. In order for the weight load specifications to be valid, you MUST install the components in this organizer per the following installation instructions. Before moving on to the system installation instructions, please take the time to review the installation requirements below.

A) Locate studs.

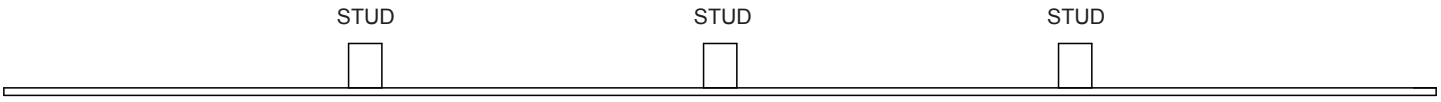

B) Hit studs in at least 3 holes.

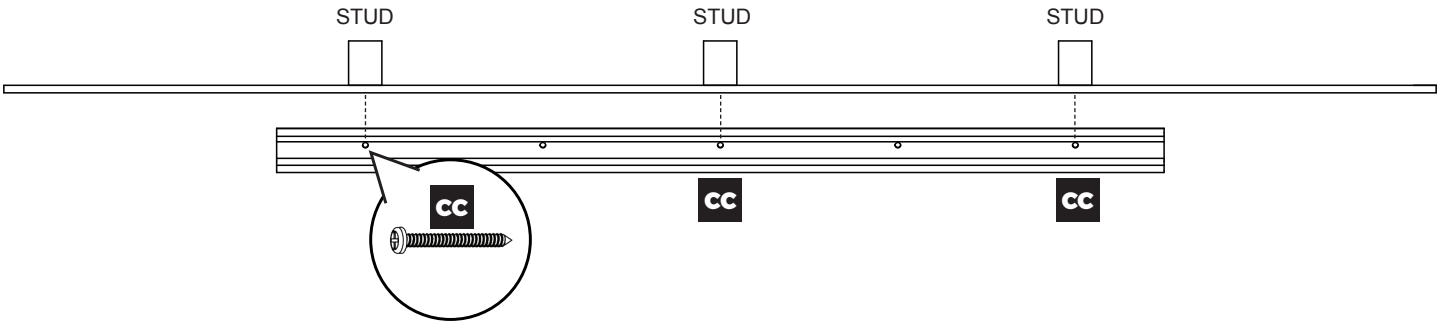

C) Use a toggle bolt on each hole that does not hit a stud.

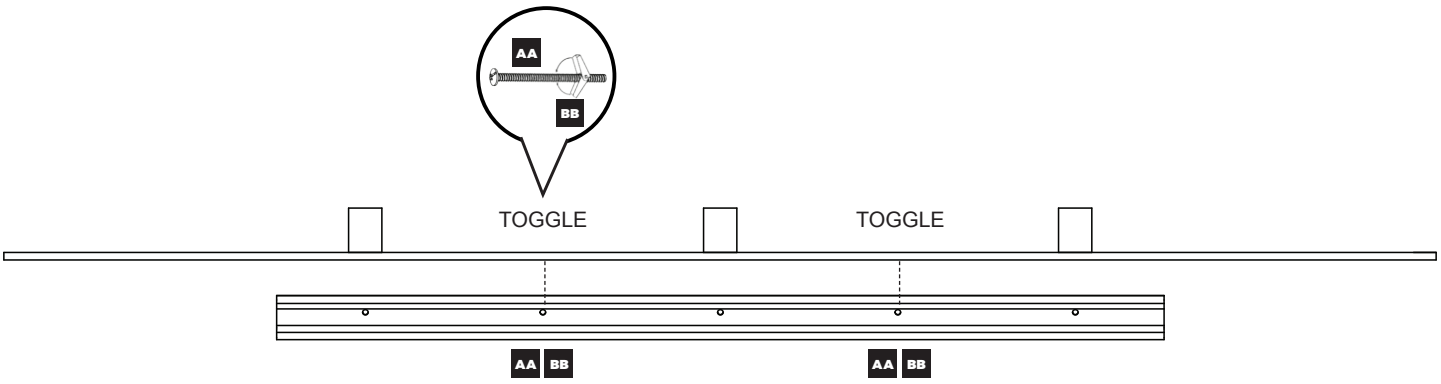

CLOSETMAID®

© 2026 The AMES Companies, Inc | Ocala, FL 34471 | 1-800-874-0008 | www.closetmaid.com

2 MARK HANG TRACK LOCATION



A) The hang track can be installed at any height, keeping in mind the overall height of your standards once installed. Be aware that the hang track is the highest point in the system, meaning no shelving can be placed above it.

B) Measure hang track to desired height and use a level to assure hang track is straight before marking holes and making a level line.

C) When track is at desired height and level, mark each screw hole on the wall using a pencil.

D) For this kit, the minimum hang track installed height is 35 in. from the top of your baseboard.

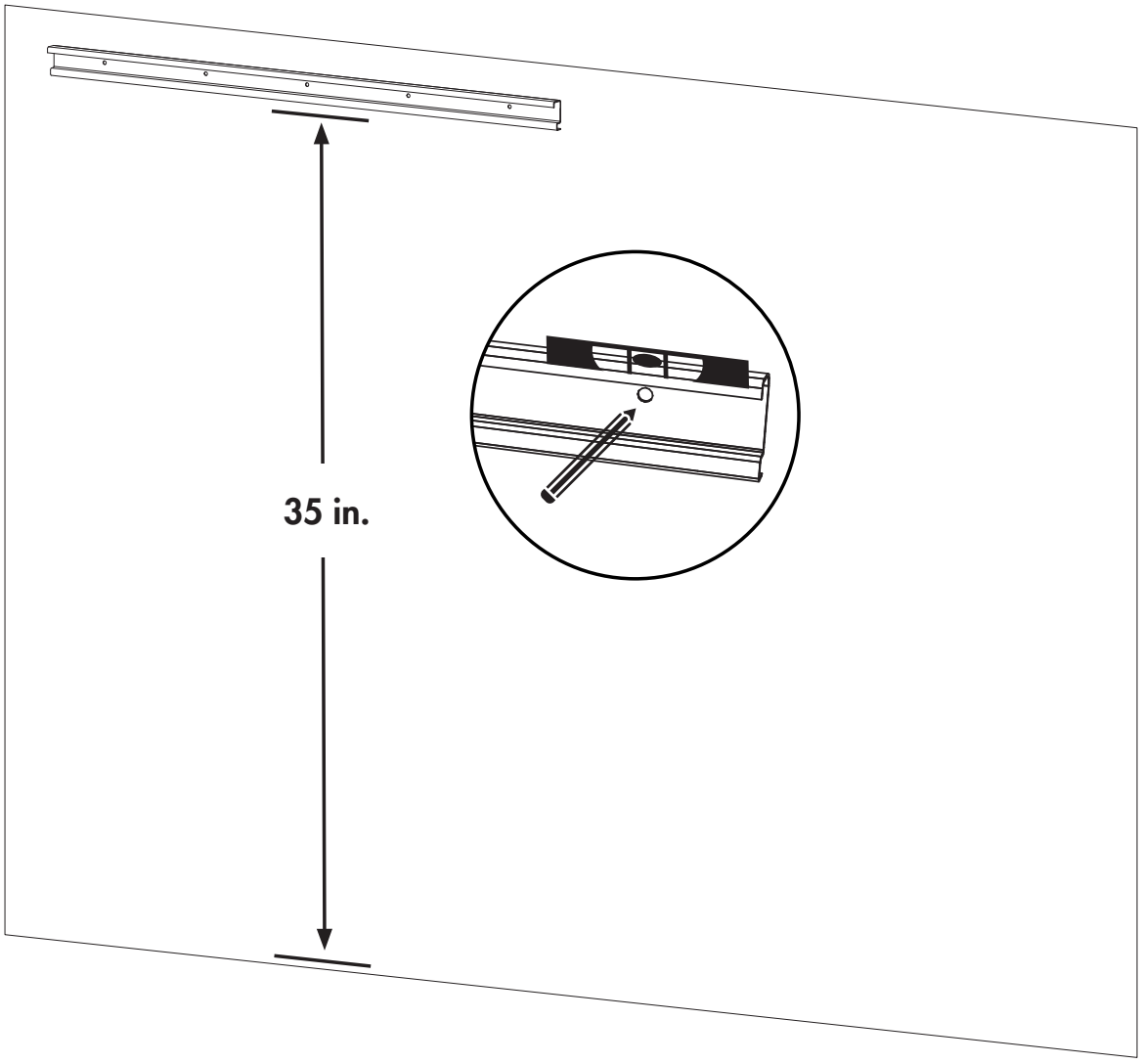

CLOSETMAID®

 © 2026 The AMES Companies, Inc | Ocala, FL 34471 | 1-800-874-0008 | www.closetmaid.com

3a FOR DRYWALL INSTALLATION



FOR **DRYWALL** INSTALLATION

A) Locate each pencil mark and drill a 1/2 in. hole for any marks **not** over a stud.

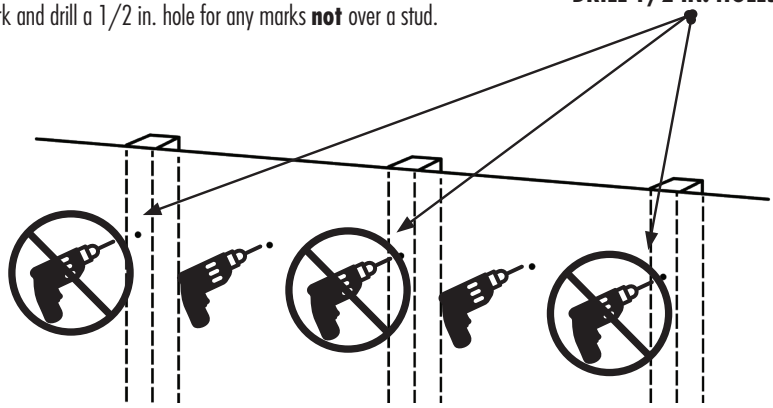

B) Insert toggle bolts through the holes in the hang track that aren't over studs, and then thread the toggle anchor onto the bolt once it's through the track.

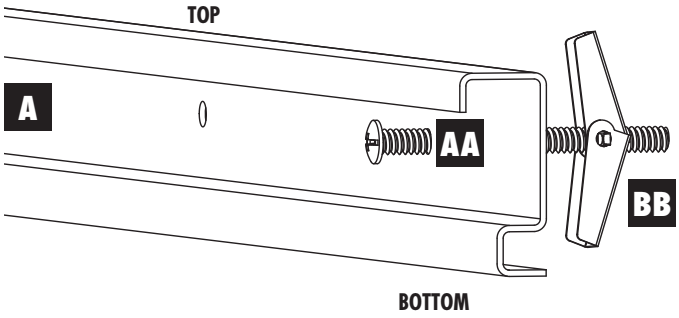

*** Tighten toggle bolt first, then stud screws**

C) Insert a toggle bolt into the predrilled holes in the drywall. Be sure to install the toggle bolt assembly only in the holes where there are no studs. For any marks over a stud, use a panhead screw directly. This will enhance the security of the hang track mounting.

IMPORTANT: SECURE HARDWARE THROUGH EACH HOLE!

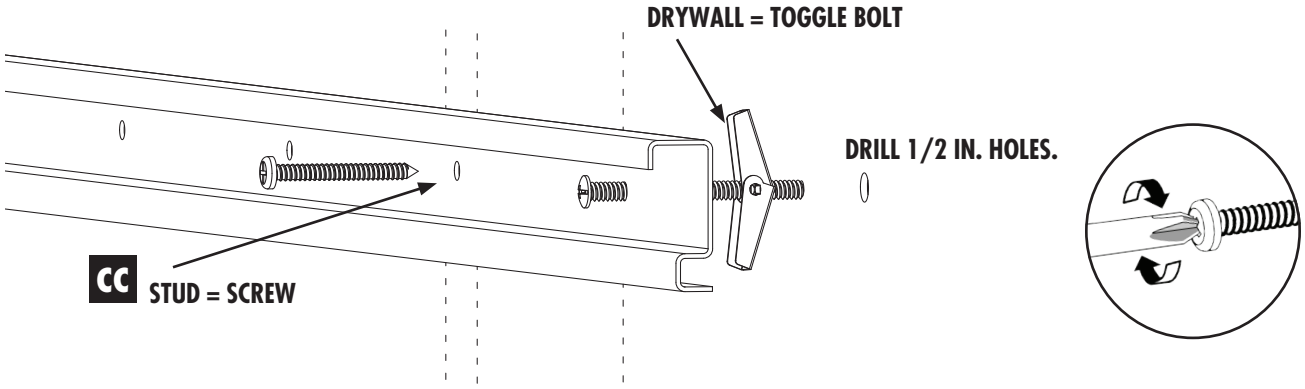

CLOSETMAID®

© 2026 The AMES Companies, Inc | Ocala, FL 34471 | 1-800-874-0008 | www.closetmaid.com

3b FOR CONCRETE INSTALLATION



FOR CONCRETE INSTALLATION

A) Locate each pencil mark and drill a 1/4 in. hole at least 2 in. deep using a masonry drill bit.

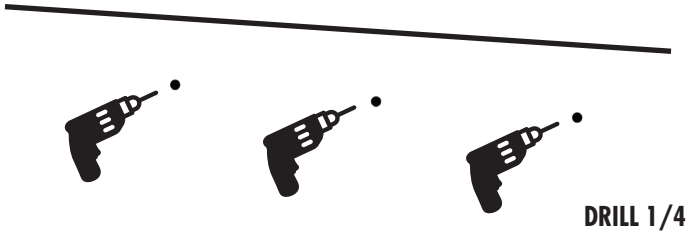

DRILL 1/4 IN. HOLES.

B) Insert anchors into 1/4 in. predrilled holes and secure hang track with panhead screws.

IMPORTANT: SECURE HARDWARE THROUGH EACH HOLE!

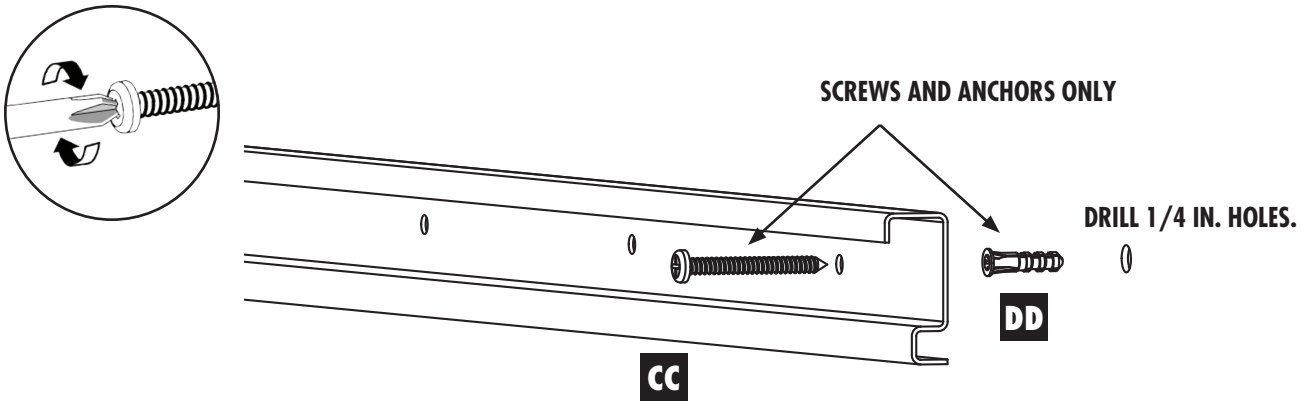

CLOSETMAID®

 © 2026 The AMES Companies, Inc | Ocala, FL 34471 | 1-800-874-0008 | www.closetmaid.com

4 INSTALL STANDARDS ONTO HANG TRACK

Attach standards to the hang track by placing each standard into the top groove as shown below. Measure from CENTER of one standard to CENTER of next standard. Space standards NO MORE than 16 in. apart and a MINIMUM of 2 in. in from end of hang track.

Adjust standards evenly for your specific closet width.

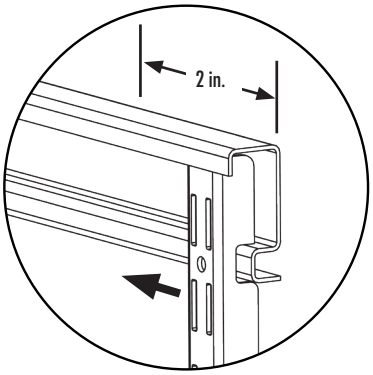

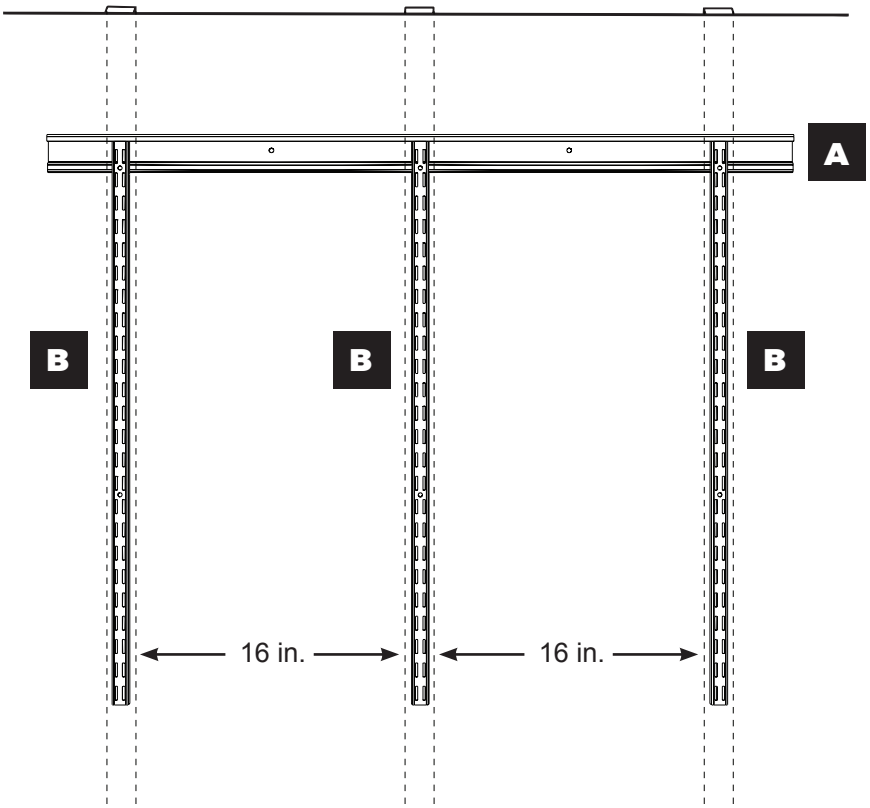

© 2026 The AMES Companies, Inc | Ocala, FL 34471 | 1-800-874-0008 | www.closetmaid.com

5 SECURE STANDARDS TO WALL



A) Make sure each standard is level and mark the screw holes in the standards using a pencil. Predrill any necessary holes according to the illustration. Insert anchors if installing on a concrete wall or toggle bolts if installing on drywall. Secure each standard to the wall using recommended hardware as shown. Use a Phillips screwdriver to tighten each panhead screw or bolt.

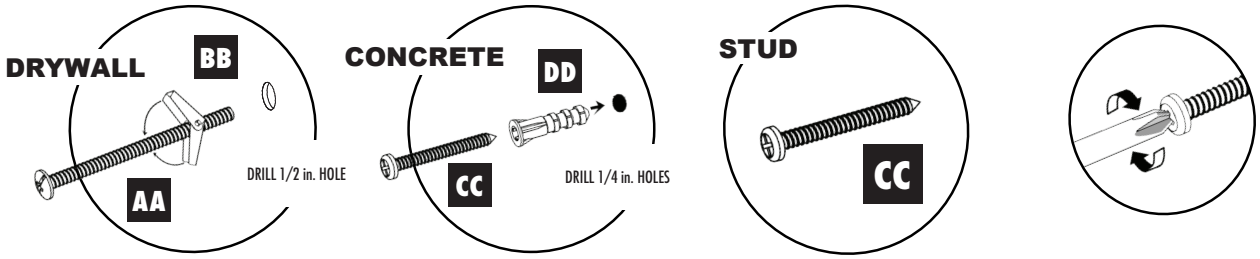

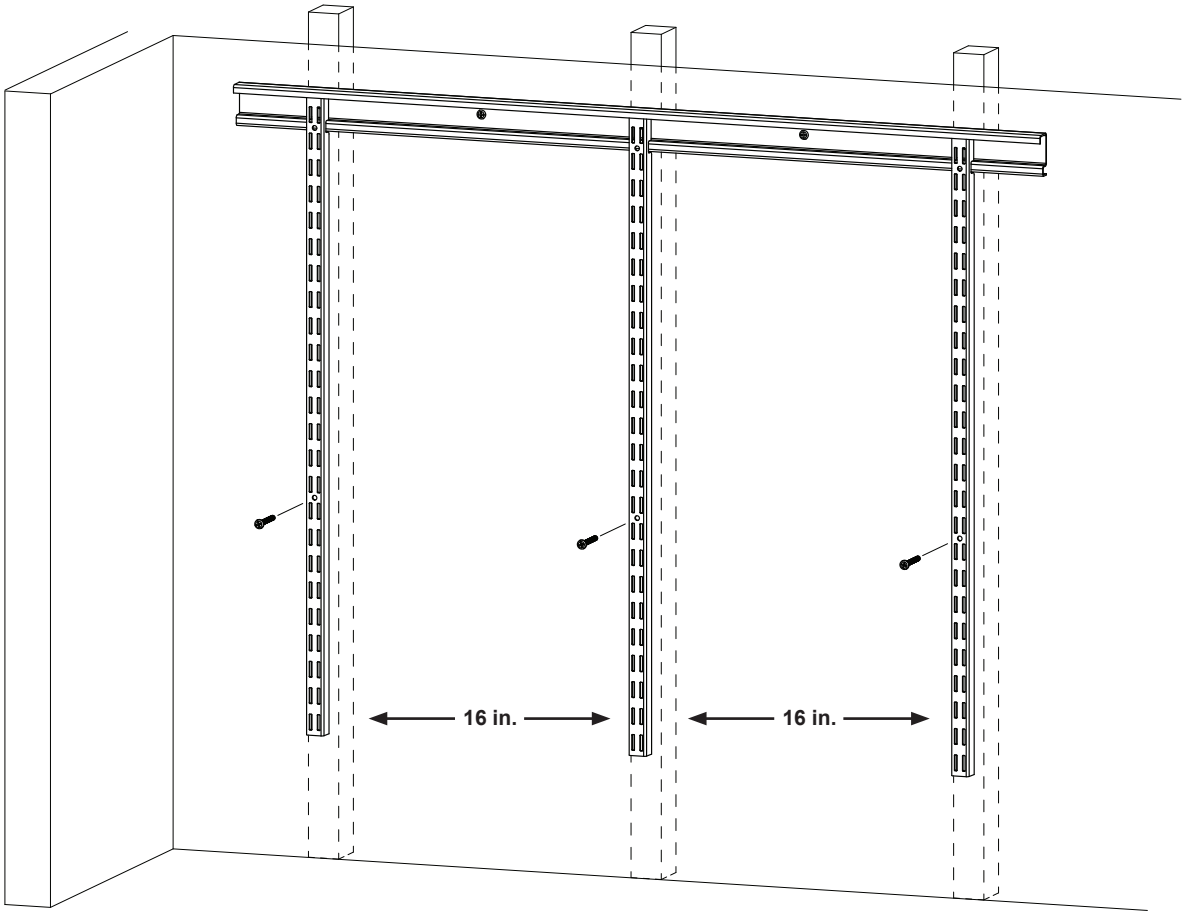

CLOSETMAID®

 © 2026 The AMES Companies, Inc | Ocala, FL 34471 | 1-800-874-0008 | www.closetmaid.com

6 INSTALL BRACKETS

Attach a bracket to each standard where you expect to place a shelf.

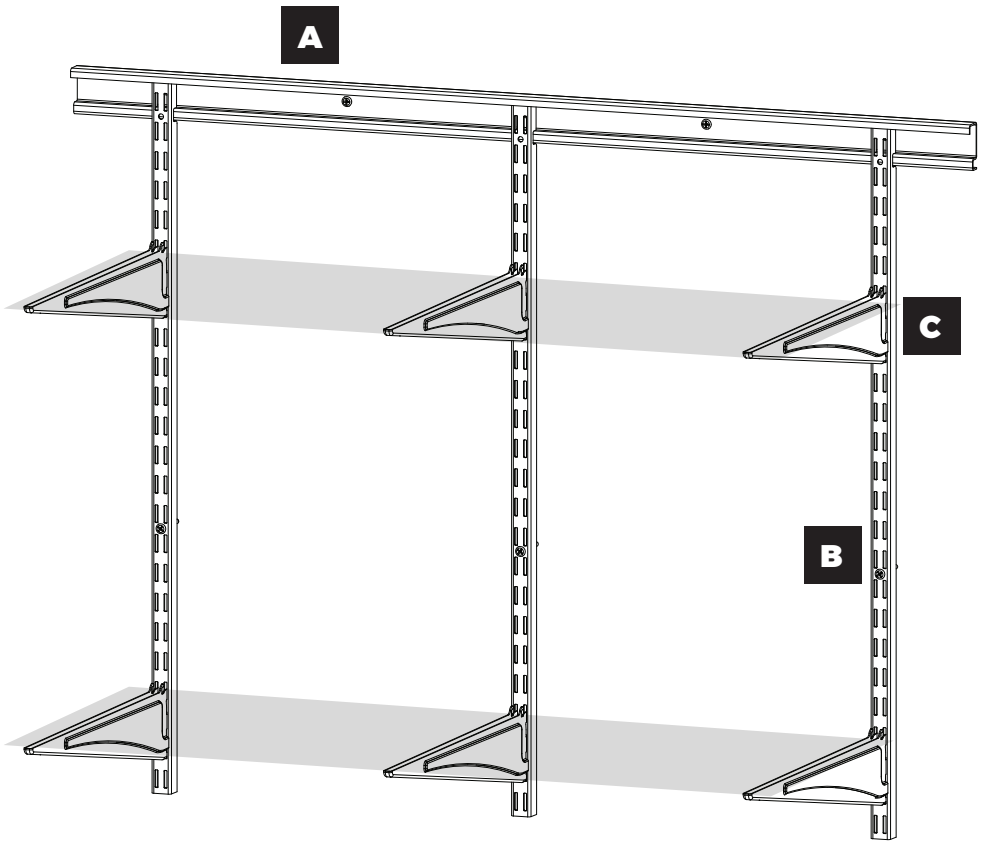

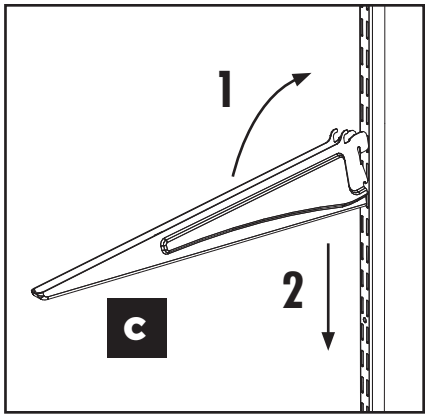

CLOSETMAID®

© 2026 The AMES Companies, Inc | Ocala, FL 34471 | 1-800-874-0008 | www.closetmaid.com

7 FOR SHELVES THAT REQUIRE CUTTING

Place shelf on brackets. Allow an equal overhang (from brackets) on both sides. Measure amount to be cut. Remove shelf and cut with hacksaw or bolt cutter. Do not make cuts where vertical spacers are on front lip of shelf.

Never allow more than a 6 in. overhang.

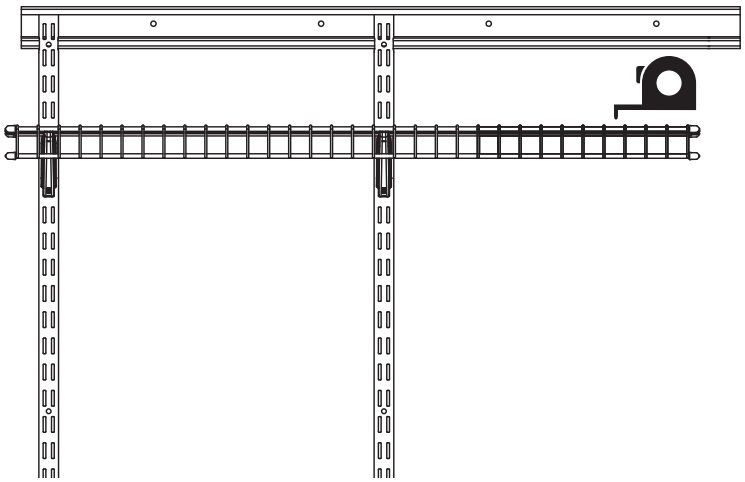

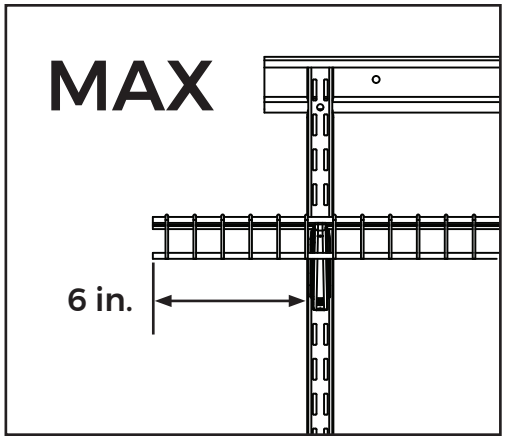

CLOSETMAID®

 © 2026 The AMES Companies, Inc | Ocala, FL 34471 | 1-800-874-0008 | www.closetmaid.com

8 INSTALL SHELVES

A) Place end caps onto exposed shelf rod ends.

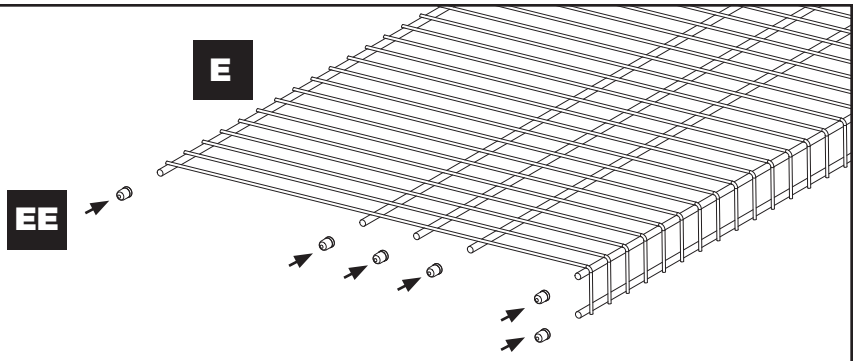

B) Rest shelf on each bracket at desired location.

1) Pull shelf forward and allow front to "drop" over nose of brackets (nose of each bracket will fit between wires).
2) Push shelf backwards so back wire fits into bracket slots.
3) Firmly pull shelf forward at each bracket location to lock shelf into place.

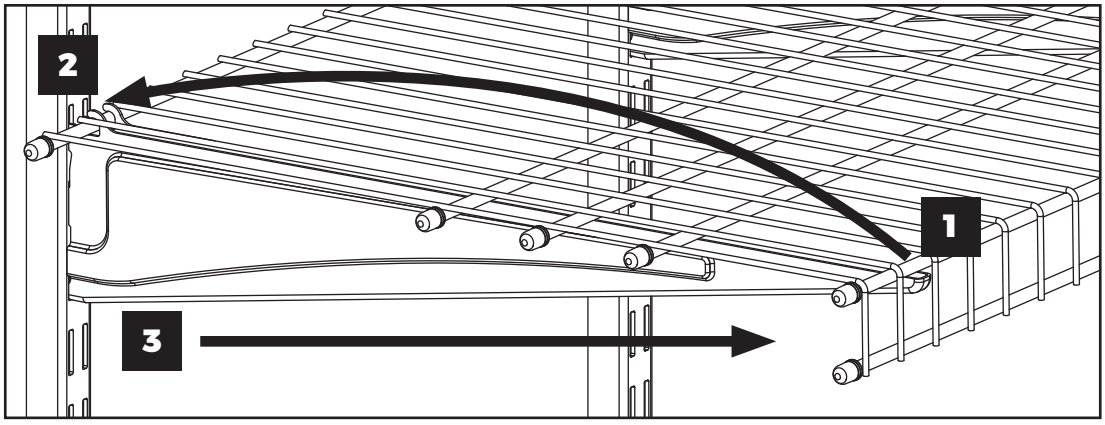

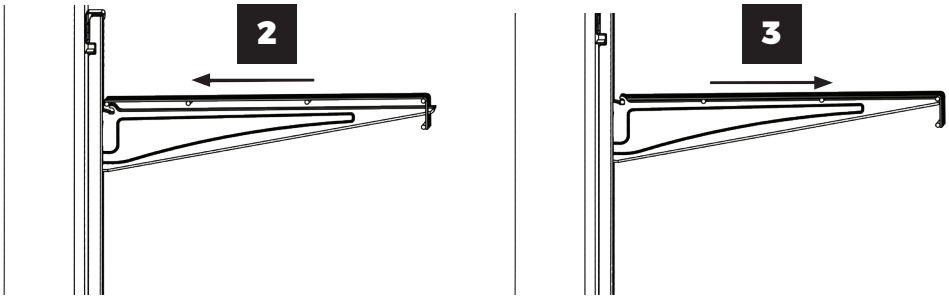

CLOSETMAID®

© 2026 The AMES Companies, Inc | Ocala, FL 34471 | 1-800-874-0008 | www.closetmaid.com