GLACIER BAY®

Item #2ACLB
Model #2ACLB-00-001
2ACLB-01-001

USE AND CARE GUIDE

FIRECLAY KITCHEN SINK

(DROP-IN, APRON FRONT)

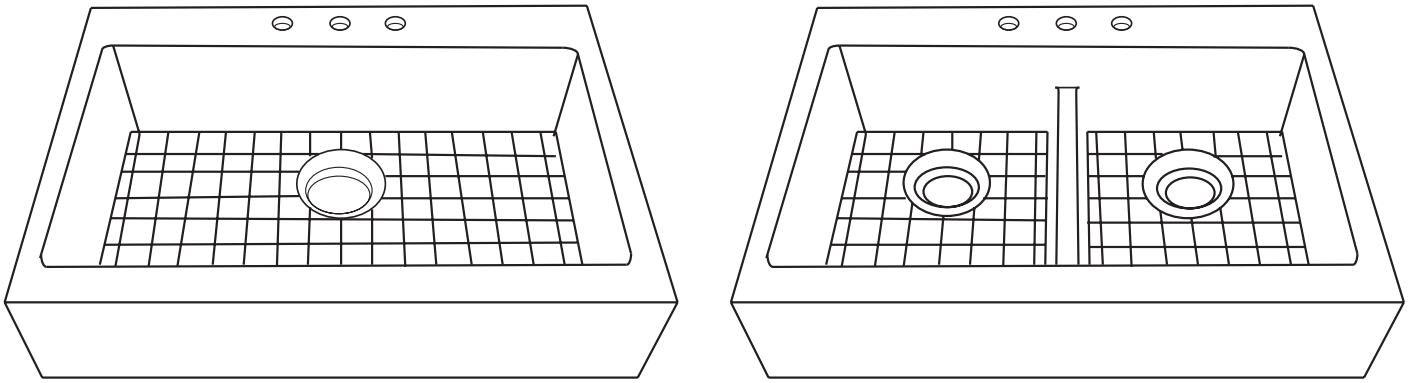

Questions, problems, missing parts? Before returning to the store,
call Glacier Bay Customer Service
8 a.m. - 7 p.m., EST, Monday - Friday, 9 a.m. - 6 p.m., EST, Saturday

1-855-HD-GLACIER

HOMEDEPOT.COM/GLACIERBAY

THANK YOU

We appreciate the trust and confidence you have placed in Glacier Bay through the purchase of this sink. We strive to continually create quality products designed to enhance your home. Visit us online to see our full line of products available for your home improvement needs. Thank you for choosing Glacier Bay!

Table of Contents

Table of Contents 2
Safety Information 2
Warranty 3
What is covered 3
What is not covered 3
Pre-Installation 4
Planning Installation 4
Installation 6
Maintenance 8
Care & Cleaning 8

Safety Information

READ THESE INSTRUCTIONS CAREFULLY BEFORE YOU BEGIN INSTALLATION.

- □ Observe all local plumbing and building codes
- □ Shut off the hot and cold water supplies
- □ Inspect the drain and supply tubing; replace if necessary
- □ Prior to installation, unpack the new sink and inspect it for damage, return the sink to its protective carton until you are ready to install it
- □ Due to the variety of installations possible with this sink, you may need to use procedures other than those described
- □ It is particularly important to understand that the proper selection of countertops or tile is critical for a secure installation; because of the variance in thickness, your carpenter, tiler, and plumber must be aware of the exact type you choose
- □ After selecting the tile and countertops, provide a sample to each contractor involved in the project; it is particularly important the carpenter, tiler, and plumber maintain communication and discuss the requirements of the project
- □ The cabinet and frame shown in these instructions are generic and may not represent the actual design or structure of your products
- □ Due to the nature of fireclay sink installations, Glacier Bay recommends that sink installations be performed by trained and experienced installers and that the sink being installed be used as its own template to ensure perfect fit
- □ To ensure a safe and damage-free installation, two people should install the sink together
- □ All information in these instructions is based on the latest product information available at the time of publication; Glacier Bay reserves the right to make revisions in the design of products without notice



WARNING: The product can break, chip, cause injury or become damaged if handled carelessly. Get help lifting the sink.



CAUTION: Risk of personal injury or product damage. Handle with care.

NOTICE: Read these instructions carefully before you begin this installation. All information in these instructions is based on the latest product information available at the time of publication. Glacier Bay reserves the right to make revisions in the design of products without notice.

Warranty

LIFETIME LIMITED WARRANTY

WHAT IS COVERED

Glacier Bay warrants this fireclay kitchen sink manufactured after 2012, to be free of defects in material and workmanship during normal residential use for as long as the original consumer purchaser owns their home. This warranty applies to only Glacier Bay fireclay kitchen sinks installed in the United States of America, Canada, or Mexico (North America). If a defect is found in normal residential use, Glacier Bay will, at its election, repair, replace, or make appropriate adjustment. Proof of purchase (original sales receipt) must be provided to Glacier Bay with all warranty claims. Glacier Bay is not responsible for labor charges, installation, or other incidental or consequential costs. In no event shall the liability of Glacier Bay exceed the purchase price of the product.

If the fireclay kitchen sink is used commercially or is installed outside of North America, Glacier Bay warrants the fireclay kitchen sink to be free from defects in material and workmanship for one (1) year from the date the product is installed, with all other terms of this warranty applying except duration. All other components other than the fireclay component carry Glacier Bay's one-year limited warranty unless otherwise specified.

If you believe that you have a warranty claim, contact your Dealer, Plumbing Contractor, or Glacier Bay directly at 1-855-HD-GLACIER or visit www.HomeDepot.com/GlacierBay. Please be sure to provide all pertinent information regarding your claim, including a complete description of the problem, the product, model number, color, finish, and the date the product was purchased and from whom the product was purchased (i.e. online or in store). Also include your original invoice.

GLACIER BAY AND/OR SELLER ARE PROVIDING THIS WARRANTY IN LIEU OF ALL OTHER WARRANTIES, EXPRESSED OR IMPLIED, INCLUDING BUT NOT LIMITED TO THE IMPLIED WARRANTY OF MERCHANTABILITY AND FITNESS FOR A PARTICULAR PURPOSE. GLACIER BAY AND/OR SELLER DISCLAIMS ANY LIABILITY FOR SPECIAL, INCIDENTAL OR CONSEQUENTIAL DAMAGES.

Some states/provinces do not allow limitations on how long an implied warranty lasts or the exclusion or limitation of such damages, so these limitations and exclusions may not apply to you. This warranty gives the consumer specific legal rights. You may also have other rights that vary from state/province-to-state/province. This warranty is to the original consumer purchaser only, and excludes product damage due to installation error, product abuse, or product misuse, whether performed by a contractor, service company or the consumer.

This is Glacier Bay's exclusive written warranty.

WHAT IS NOT COVERED

Gloss reduction, scratching, staining and acid or alkaline etching of finish over time due to use, cleaning practices, or water, or atmospheric conditions, are not manufacturing defects but are indicative of normal wear and tear. Damage caused by accident, misuse, or abuse, such as dents and scratches after installation, is not covered by this warranty. Improper care and cleaning will void the warranty.

Contact the Customer Service Team at 1-855-HD-GLACIER or visit www.HomeDepot.com/GlacierBay.

Pre-Installation

PLANNING INSTALLATION

Please prepare all tools and materials prior to beginning the installation process.

NOTE: Due to the uniqueness of the firing process during the manufacture of fireclay it is recommended that you use ONLY the sink being installed as a cutting template for the countertops.

TOOLS REQUIRED


Safety Glasses

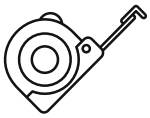
Tape Measure


Pen/Pencil


Painter's Tape


Saw

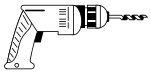
Drill


Utility Knife


Rags


Level


Silicone Sealant


Screwdriver


Adjustable Wrench

HARDWARE INCLUDED

NOTE: Due to the method of installation, hardware is not included with this fireclay sink.

Pre-Installation (continued)

PACKAGE CONTENTS

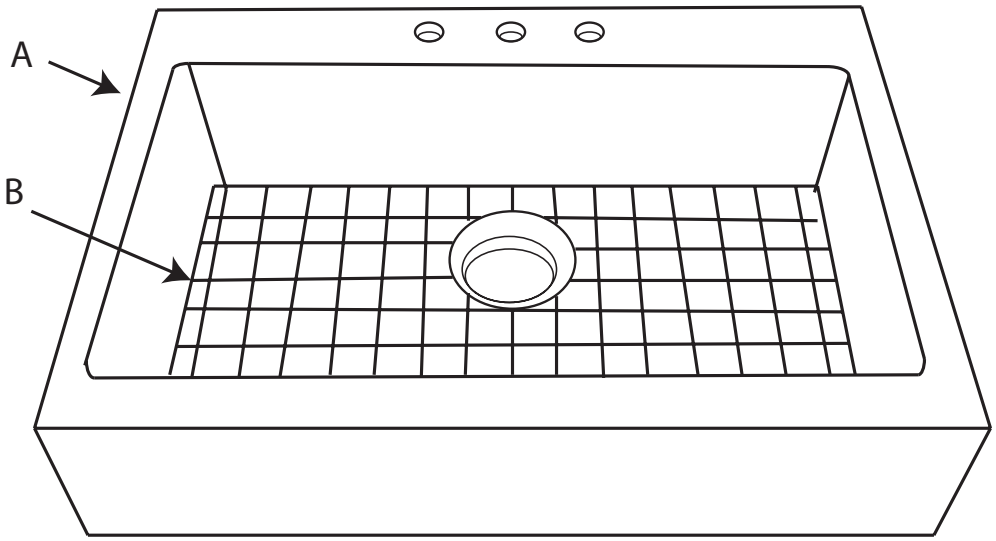

2ACLB-00-001

Part	Description	Quantity
A	Fireclay Kitchen Sink	1
B	Stainless Steel Grid	1

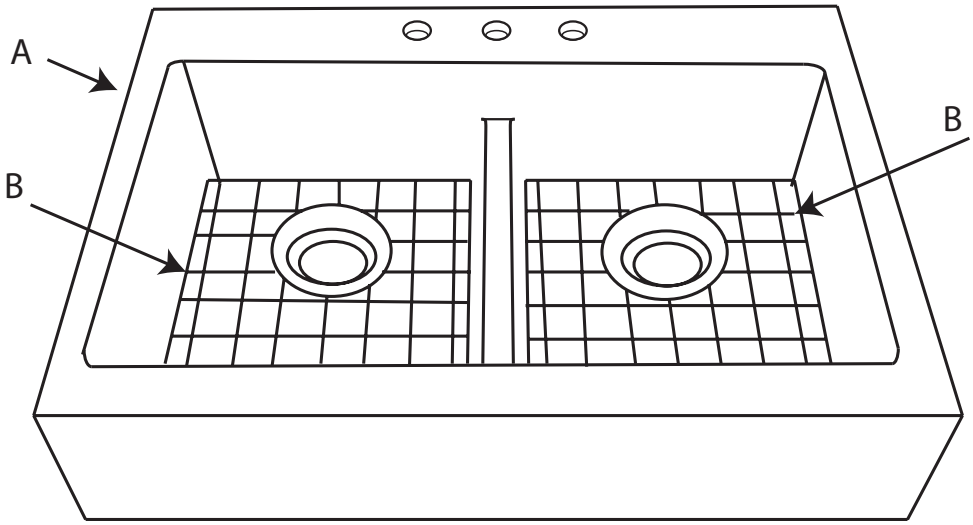

2ACLB-01-001

Part	Description	Quantity
A	Fireclay Kitchen Sink	1
B	Stainless Steel Grids	2

Installation

1 PREPARATION

- □ The sink is intended for installation in 36 inch cabinets
- □ Verify that the depth of the apron-front of the sink will fit the cabinet opening and not overlap the cabinet doors
- □ Install the strainer and faucet before installing the sink for ease of installation (optional)
- □ Due to the various cutout sizes possible, a template is not supplied-- use the actual sink being installed as its own guide
- □ The countertop must be flat and level, and not thicker than 1.5 inches (40 mm) or have a larger overhang than 1.5 inches (40 mm); be sure the countertop is fully supported by the cabinet
- □ The sink will not install on countertops with integral drip edges

2 INSTALLATION

- □ Unpack the sink and inspect for defects; if you have any questions, call Glacier Bay before beginning the installation
- □ The countertop must be flat, without drip edges; the countertop must have less than 1.5 inches (40 mm) overhang and a maximum thickness of 1.5 inches (40 mm)

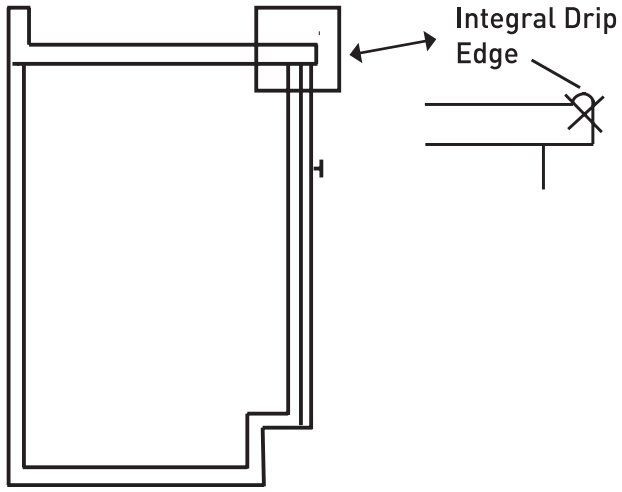

- □ Measure the countertop, front-to-back, to make sure the sink will not hit the backsplash
- □ If replacing a sink, measure the old sink and make sure the new sink will cover the cut out
- □ Turn off the water supply to the kitchen faucet at the angle stops
- □ Remove the faucet and old sink
- □ Check that the water supply and the drain lines are in good shape and quality for the new sink and faucet installation; replace if needed

3 INSTALLATION cont.

- □ Add painter's tape on the countertop where the sink will be installed; place the sink upside down on top of the tape--be sure to position the sink so the overhang of the apron-front is properly positioned; use the pen to trace the sink on the tape

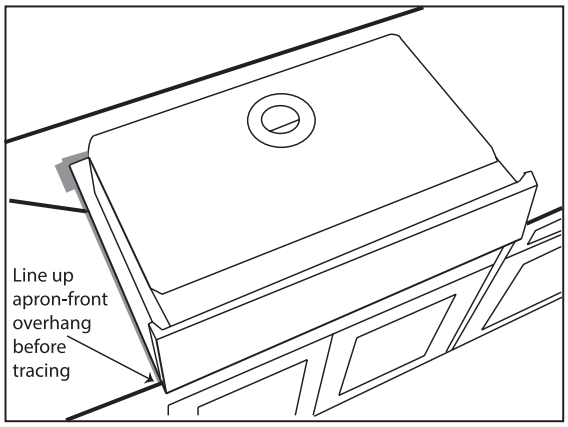

- □ Remove the sink and mark a line 3/4 inches inside the traced line; this is the cut line for the new sink

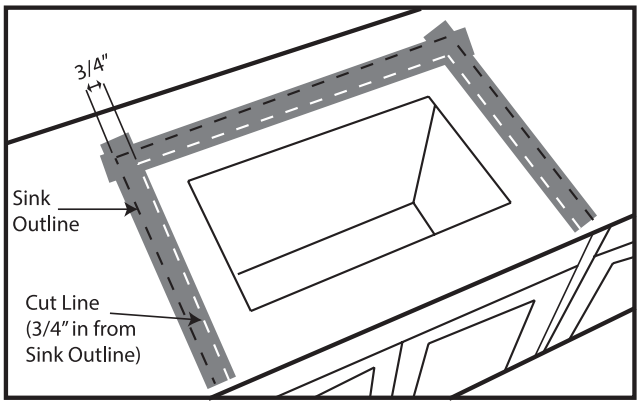

4 INSTALLATION cont.

- □ Measure the height and width of the apron-front of the new sink and cut out or remove the front of the cabinet to fit the sink's apron-front; verify that the apron-front will cover the opening and that there is adequate clearing to open the cabinet doors

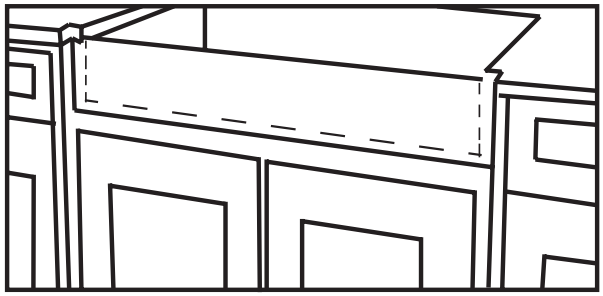

- □ Measure the width of the apron-front of the sink and cut away unneeded material of the corners from the countertop for the sink to fit

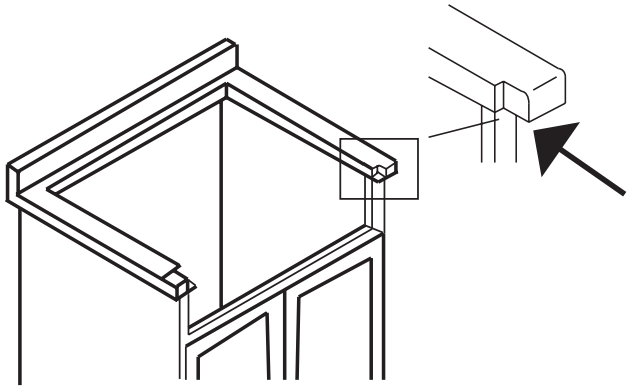

- □ Apply clear silicone sealant on the rim of the sink and install the sink flush with the cabinet front; immediately wipe away excess sealant from around the sink
- □ Install the faucet and strainer according to their instructions; connect the drain

Maintenance

- □ Proper care and cleaning of your new sink will keep it looking its best for years to come
- □ Please follow these care and cleaning guides to ensure best results

Care and Cleaning

- □ Always test your cleaning products on an inconspicuous area before applying them to the entire surface
- □ Wipe all surfaces clean and rinse completely with water immediately after applying cleaning solutions to avoid any unintended damage; rinse off and dry any spray that lands on surrounding surfaces-- do not allow cleaners to soak or sit on surfaces
- □ Use a soft, dampened sponge or cloth for cleaning; never use an abrasive material like brushes or scouring pads to clean surfaces to avoid scratching
- □ Rinse the sink thoroughly and wipe it dry with a soft cloth after each use to maintain quality
- □ When necessary, soft abrasive cleaners may be used for a deeper clean of your sink; keep in mind, strong abrasive cleaners will scratch and dull the surface and should not be used
- □ Do not store open containers of cleaners or chemicals such as acids, bleach, sodium chloride, lye, toilet bowl cleaner, or hard water stain removal products under your sink

NOTICE: Success with cleaners and procedures can be affected by water hardness and temperature, usage amounts, ingredient changes and conditions of the product being cleaned. As a result of these factors, Glacier Bay cannot guarantee the effectiveness of the recommendations made in this guide.

- □ For general cleaning of your sink:
    - Fantastik Antibacterial
    - Heavy Duty Formula 409
    - Antibacterial All Purpose
    - Green Works All Purpose
    - Soft Scrub Lemon Cleanser
- □ To remove rust build-up or other stains on your sink:
    - Bar Keepers Friend
    - Super Iron Out Rust Stain Remover
- □ For care of chrome and other finish metal surfaces (such as the grid), do not use cleaners containing ammonia, bleach, or acid; rinse thoroughly and use a soft cloth to wipe the product dry after each use
- □ Finishes always look their best when any water is blotted dry from the surface; allowing it to air dry may leave water deposits and spots. To avoid scratching, always use a dabbing method to dry the surface and never an abrasive, or rubbing action; using a damp sponge or gentle cleaning cloth is recommended
- □ Products to consider for general cleaning of your grid:
    - Fantastik Antibacterial
    - Green Works All Purpose
    - Green Works Glass Cleaner
    - Windex Original



Questions, problems, missing parts? Before returning to the store,
call Glacier Bay Customer Service
8 a.m. - 7 p.m., EST, Monday-Friday, 9 a.m. - 6 p.m., EST, Saturday

1-855-HD-GLACIER

HOMEDEPOT.COM/GLACIERBAY

Retain this manual for future use.