LR 7-HEARTH RACK

Thank you for choosing Enclume!

Enclume racks are the ultimate quality, design, strength and function.

WARNING: READ ALL OF THE INSTRUCTIONS BEFORE ASSEMBLING AND USING YOUR RACK



If you need help, please call 1-877-ENCLUME

Enclume Design Products

24 Colwell Street, Port Hadlock, WA 98339

Phone 360-385-6100 • Fax 360-385-6156

www.enclume.com

Enclosed you will find everything needed for the assembly and use of your storage rack. Two people make assembly and installation easier. The parts and hardware included are:

Hardware included:
4 – 3/8" x 5/8" Button head screws
1 – 7/32" Allen wrench
4 – Hard floor glides

Components included:
2 – Upright body pieces
2 – Legs

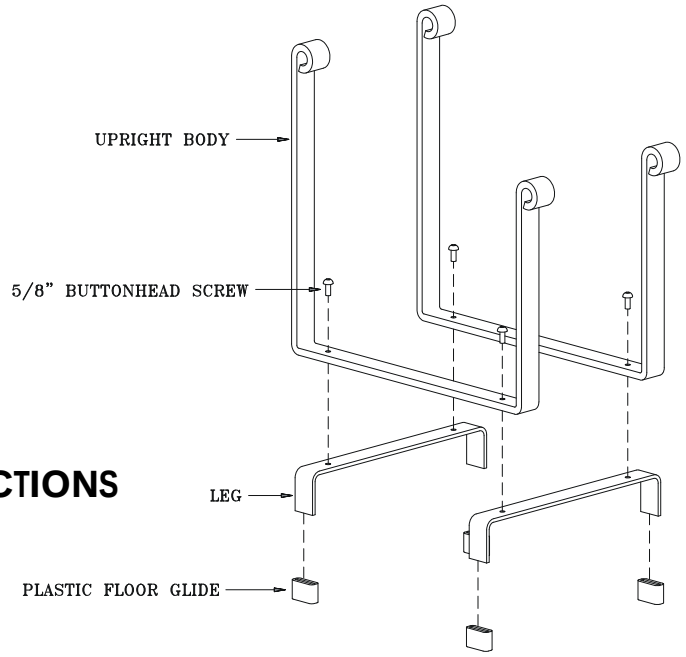

ASSEMBLY AND INSTALLATION INSTRUCTIONS

Rack Assembly

1. Slip the floor glides over the ends of the legs.
2. Place the two upright body pieces on top of and perpendicular to the legs. Using the Allen wrench and the four 3/8" x 5/8" button head screws, attach the legs and the uprights together. The screws should be inserted from the top down toward the floor. Tighten the screws only finger tight.
3. Square up your rack and tighten all the screws firmly.

WARNING

It is important that your rack is assembled correctly. If the unit is assembled or used incorrectly, it could become unstable and collapse, possibly causing injury.

Limited Warranty: This product is warranted to be free of material defects for a period of five years from the date of purchase. Customer's exclusive remedy shall be the repair or replacement of the defective product and shall be subject to the following conditions: (1) notice of any defect is received by Enclume within the warranty period and (2) customer returns the defective product to Enclume Design Products, 24 Colwell St., Port Hadlock, WA 98339, *postage prepaid* within *20* days following a return authorization number (which may be obtained by telephoning the number at the top of this instructions) being provided to the customer by Enclume. There are no other warranties, expressed or implied. **THERE ARE NO WARRANTIES OF MERCHANTABILITY OR FITNESS FOR A PARTICULAR PURPOSE. ENCLUME SPECIFICALLY DISCLAIMS ANY AND ALL INCIDENTAL OR CONSEQUENTIAL DAMAGES ARISING OUT OF THE PURCHASE OR USE OF ENCLUME'S PRODUCTS.**