Patio Heater 50000 BTU
Owner's Manual

MODEL:
US50SR3

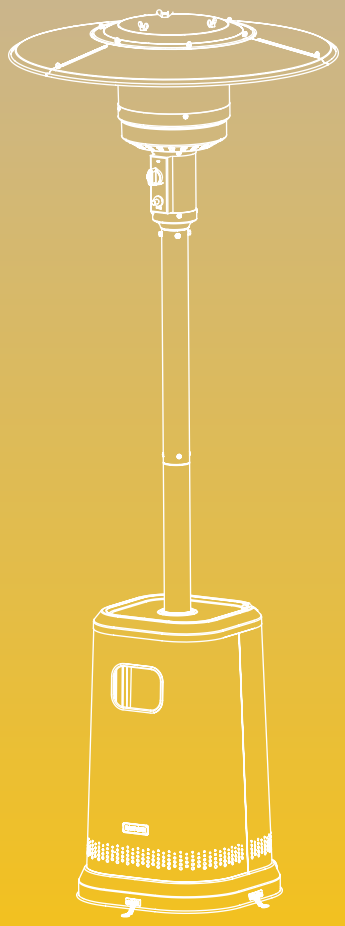

EAST OAK

Need help starting?
Scan the QR code for installation video guidance.

installation video

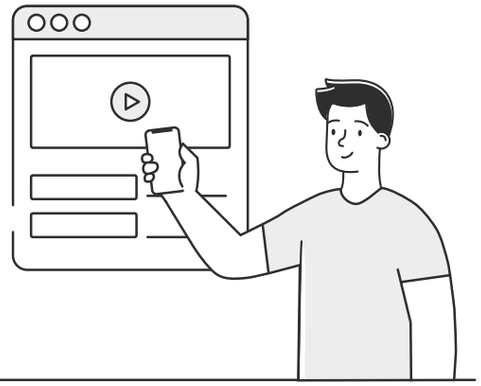

3-Y

Unlock all the perks!
Start the registration process now for a 3-year warranty.

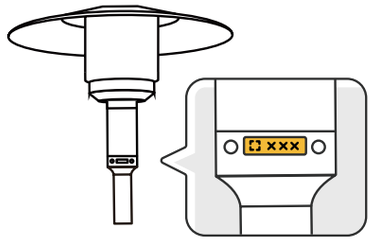

Step 1:

Found the Unique Product ID on the product.

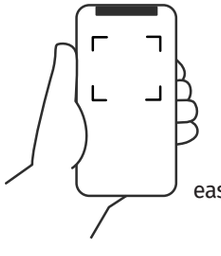

eastoak.com/warranty

Step 2:

Scan the QR code within 90 days to access our registration page. Fill the Unique Product ID and other required information as instructed.

Complete the registration !

Questions? Comments?
Reach out to us for expert support!

support@eastoak.com
eastoak.com
1-833-EAST-OAK (USA)
(9am-5pm PST/PDT)

Welcome to the East Oak family!

Stay updated with our latest news and exclusive discounts by following us on social media!

Facebook @eastoakliving
www.facebook.com/eastoakliving

Instagram @eastoakliving
www.instagram.com/eastoakliving/

Youtube @eastoakliving2080
www.youtube.com/@eastoakliving2080

IMPORTANT INFORMATION

Please check all parts and components to ensure no damage or missing items before starting the product's construction. If you have any problems or discover any missing parts, please contact customer service at **support@eastoak.com.**

- Some parts may contain sharp edges. Wear protective gloves if necessary during assembly.
- When using power tools, please adjust the gear to the minimum. Otherwise, it will cause damage to the parts.
- Assemble on a soft surface such as a drop sheet or rug to avoid scratching.

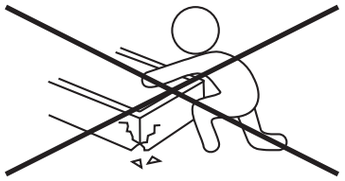

⚠ SAFETY INFORMATION

- Please read and understand this entire manual before attempting to assemble, operate, or install the product.
- This manual contains important information about the assembly, operation, and maintenance of this patio heater. General safety information is presented in these first few pages and is also located throughout the manual. Keep this manual for future reference and to educate new users of this product. This manual should be read in conjunction with the labeling on the product. Safety precautions are essential when any mechanical or propane fueled equipment is involved. These precautions are necessary when using, storing, and servicing. Using this equipment with the respect and caution demanded will reduce the possibilities of personal injury or property damage.
- The following symbols shown below are used extensively throughout this manual. Always heed these precautions, as they are essential when using any mechanical or fueled equipment.
- Installation of this appliance at altitudes above 2000 ft (610 m) shall be in accordance with local codes, or in the absence of local codes, ANSI Z223.1/NFPA 54 or CSA B149.1.

⚠ DANGER

DANGER indicates an imminently hazardous situation which, if not avoided, will result in death or serious injury.

⚠ DANGER

- Failure to comply with the precautions and instructions provided with this heater can result in death, serious bodily injury and property loss or damage from hazards of fire, explosion, burn, asphyxiation, and/or carbon monoxide poisoning. Only persons who can understand and follow the instructions should use or service this heater.

⚠ DANGER FOR YOUR SAFETY

If you smell gas:

- Shut off gas to the appliance.
- Extinguish any open flame.
- If odor continues, keep away from the appliance and immediately call your gas supplier or fire department.

⚠ DANGER EXPLOSION - FIRE HAZARD

- Keep solid combustibles, such as building materials, paper, or cardboard, a safe distance away from the heater as recommended by the instructions.
- Provide adequate clearances around air openings into the combustion chamber.
- Never use the heater in spaces which do or may contain volatile or airborne combustibles, or products such as gasoline, solvents, paint thinner, dust particles, or unknown chemicals.
- During operation, this product can be a source of ignition. Keep heater area clear and free from combustible materials, gasoline, paint thinner, cleaning solvents, and other flammable vapors and liquids. Do not use heater in areas with high dust content. Minimum heater clearances from combustible materials: three (3) feet from the sides and three (3) feet from the top.

C ETL LISTED US
Intertek
5020959

SAFETY INFORMATION

DANGER EXPLOSION - FIRE HAZARD

- Never store propane near high heat, open flames, pilot lights, direct sunlight, other ignition sources or where temperatures exceed 120 degrees F (49°C).
- Propane vapors are heavier than air and can accumulate in low places. If you smell gas, leave the area immediately.
- Never install or remove propane cylinder while heater is lighted, near flame, pilot lights, other ignition sources or while heater is hot to touch.
- This heater is red hot during use and can ignite flammables too close to the burner. Keep flammables at least 3 feet from sides and 3 feet from top. Keep gasoline and other flammable liquids and vapors well away from heater.
- Store the propane cylinder outdoors in a well ventilated space out of reach of children. Never store the propane cylinder in an enclosed area (house, garage, etc.). If heater is to be stored indoors, disconnect the propane cylinder for outdoor storage.

WARNING

- We cannot foresee every use which may be made of our heaters.
- Check with your local fire safety authority if you have questions about heater use.
- Other standards govern the use of fuel gases and heat producing products for specific uses. Your local authorities can advise you about these.
- If no local codes exist, follow National Fuel Gas Code, ANS Z223.1. In Canada, installation must conform to local codes. If no local codes exist, follow the current National standards of CANADA CAN/CGA-B 149.2.

WARNING

WARNING indicates an imminently hazardous situation which, if not avoided, will result in death or serious injury.

DO NOT store or use gasoline or other flammable vapors and liquids in the vicinity of this or any other appliance. A propane cylinder not connected for use shall not be stored in the vicinity of this or any other appliance.

WARNING For Outdoor Use Only

CARBON MONOXIDE HAZARD

- This appliance can produce carbon monoxide which has no odor.
- Using it in an enclosed space can kill you.
- Never use this appliance in an enclosed space such as a camper, tent, car, or home.

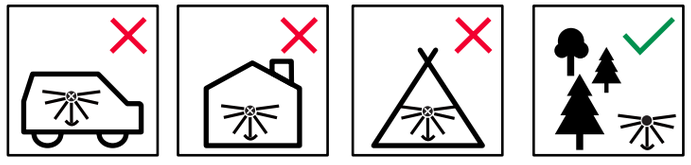

WARNING

- Improper installation, adjustment, alteration, service, or maintenance can cause property damage, injury, or death. Read the installation, operation, and maintenance instructions thoroughly before installing or servicing this equipment.
- Certain materials or items, when stored under the heater, will be subjected to radiant heat and could be seriously damaged.

BURN HAZARD

- Never leave heater unattended when hot or in use.
- Keep out of reach of children.

CAUTION

SERVICE SAFETY

- Keep all connections and fittings clean. Make sure propane cylinder valve outlet is clean.
- During set up, check all connections and fittings for leaks using soapy water. Never use a flame.
- Use as a heating appliance only. Never alter in any way or use with any device.

CAUTION

CAUTION indicates an imminently hazardous situation which, if not avoided, may result in minor or moderate personal injury, or property damage.

SAFETY INFORMATION

WARNING

- This product is fueled by propane gas. Propane gas is invisible, odorless, and flammable. An odorant is normally added to help detect leaks and can be described as a “rotten egg” smell. The odorant can fade over time so leaking gas is not always detectable by smell alone.
- Propane gas is heavier than air and leaking propane will sink to the lowest level possible. It can ignite by ignition sources including matches, lighters, sparks, or open flames of any kind many feet away from the original leak. Use only propane gas set up for vapor withdrawal.
- Store or use propane gas in compliance with local ordinances and codes or with ANS/NFPA 58. Turn off propane when not in use.

WARNING

- Alert children and adults to the hazards of high surface temperatures. Stay away from these surfaces to avoid burning skin or igniting clothing.
- Carefully supervise young children when in the vicinity of the heater.
- Do not hang clothing or any other flammable materials from the heater, or place on or near the heater.
- Replace any guard or protective device removed for servicing the appliance prior to placing back in service.
- Installation and repair should be done by a qualified service person. The heater should be inspected before use and annually by a qualified service person. More frequent cleaning may be required as necessary. It is imperative that the control compartment, burners, and circulating air passageway of the appliance be kept clean.

THIS PRODUCT CONTAIN SHARP EDGES ON THE PANELS, CYLINDER HOUSING, AND HANDLE PLEASE INSTALL WITH CARE.

PREPARATION

Before beginning assembly of product, make sure all parts are present. Compare parts with package contents list and hardware contents above. If any part is missing or damaged, do not attempt to assemble the product. Contact customer service for replacement parts.

ASSEMBLY SUGGESTIONS

- Estimated Assembly Time: 60 minutes
- Two adults required for a safe assembly
- Cross-head screwdriver
- Ladder

BE CAREFUL

Any items stored above, next to, or under this heater may be subject to radiant heat and in result may be damaged. Combustible materials should not be within 48 inches of the product.

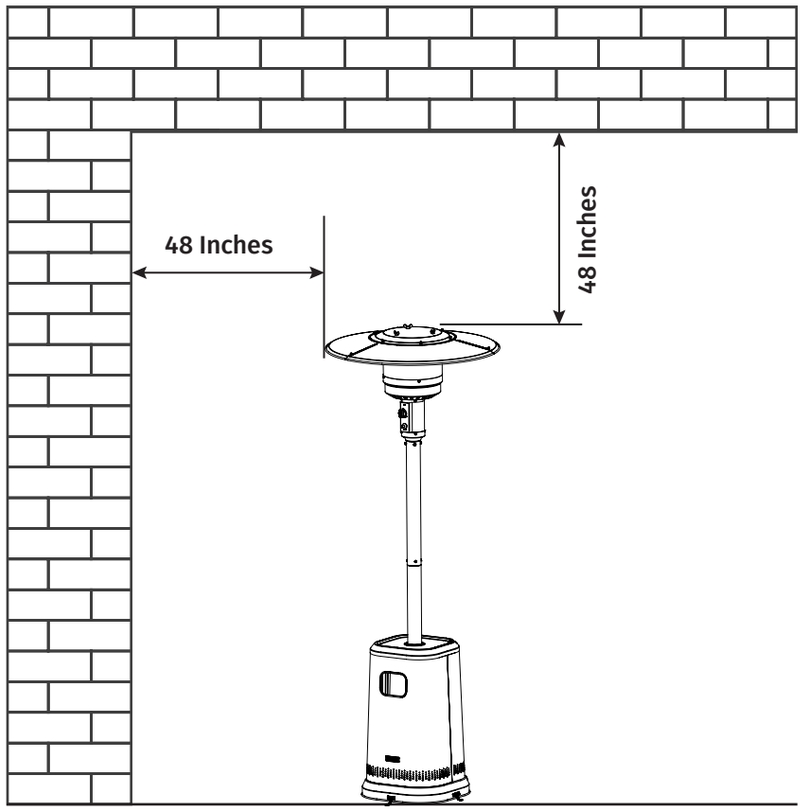

PACKAGE CONTENTS

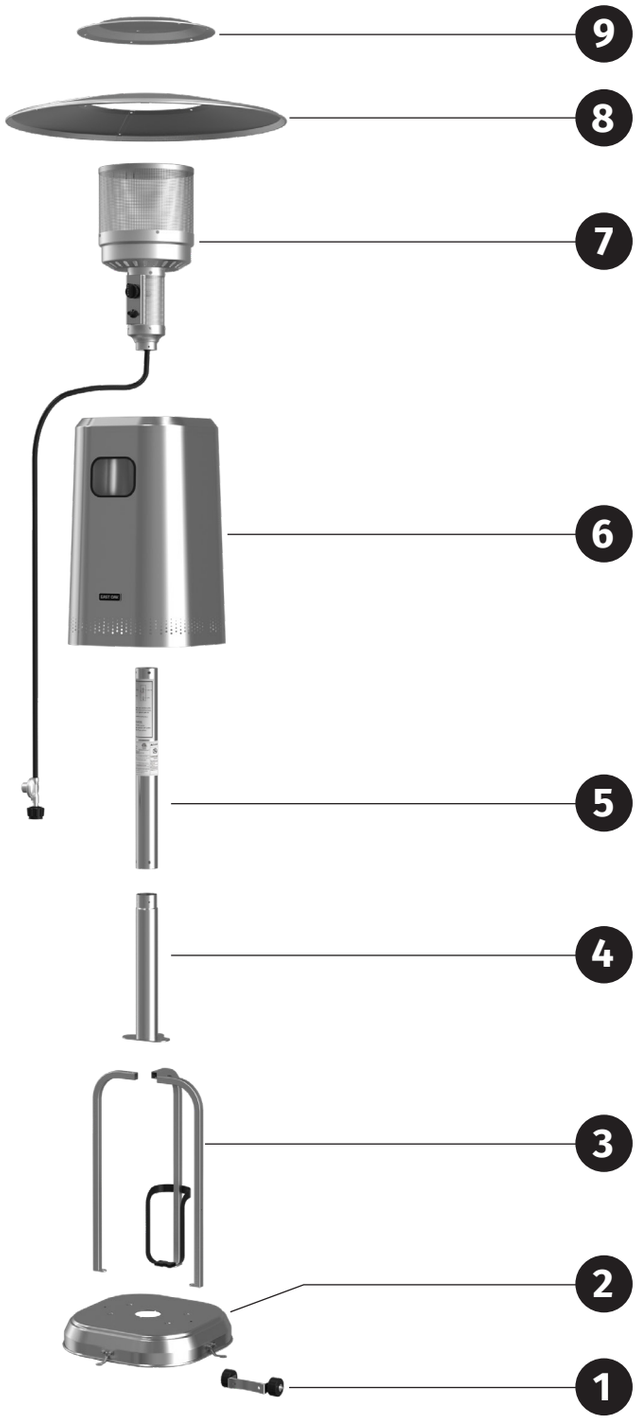

PACKAGE CONTENTS

PART	DESCRIPTION	QUANTITY
1	Wheel Kit	1
2	Base	1
3	Support Bracket	3
4	Lower Post	1
5	Upper Post	1
6	Cylinder Housing	1
7	Burner Assembly	1
8	Reflector Panel	3
9	Reflector Plate	1

PARTS LIST

Wheel Kit

1 X 1 PC

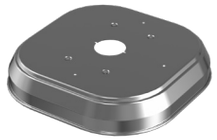

Base

2 X 1 PC

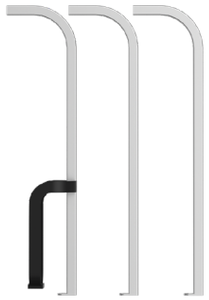

Support Bracket

3 X 3 PCS

Lower Post

4 X 1 PC

Upper Post

5 X 1 PC

Cylinder Housing

6 X 1 PC

PARTS LIST

Burner Assembly

7 X 1 PC

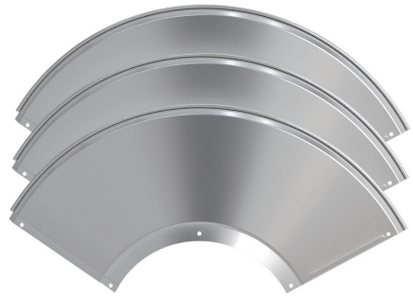

Reflector Panel

8 X 3 PCS

Reflector Plate

9 X 1 PC

PARTS LIST

Washer Bolt & M6 Flange Nut

B X 6 PCS + Spare X 1

Bolt & M6 Flange Nut

E X 6 PCS + Spare X 1

Washer Bolt

F X 13 PCS + Spare X 1

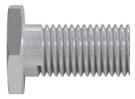

Bolt M8*16

D X 3 PCS

Post Bolt

K X 4 PCS + Spare X 1

Cap Nut

G X 9 PCS + Spare X 1

M8 Washer

H X 9 PCS + Spare X 1

M6 Washer

M X 3 PCS + Spare X 1

PARTS LIST

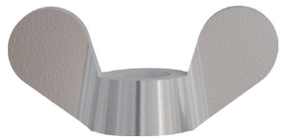

Wing Nut

J X 3 PCS

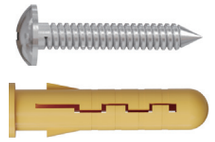

Expansion Screw

L X 3 PCS + Spare X 1

Stud

I X 3 PCS

Wrench

C X 2 PCS

Anchoring Arm

A X 3 PCS

ASSEMBLY INSTRUCTIONS

1 Attach the wheel assembly① to base② with sand box using 2 M8 flange nuts and 2 M8*16 bolts.

TIPS: The required screws are packaged with the wheel kit.

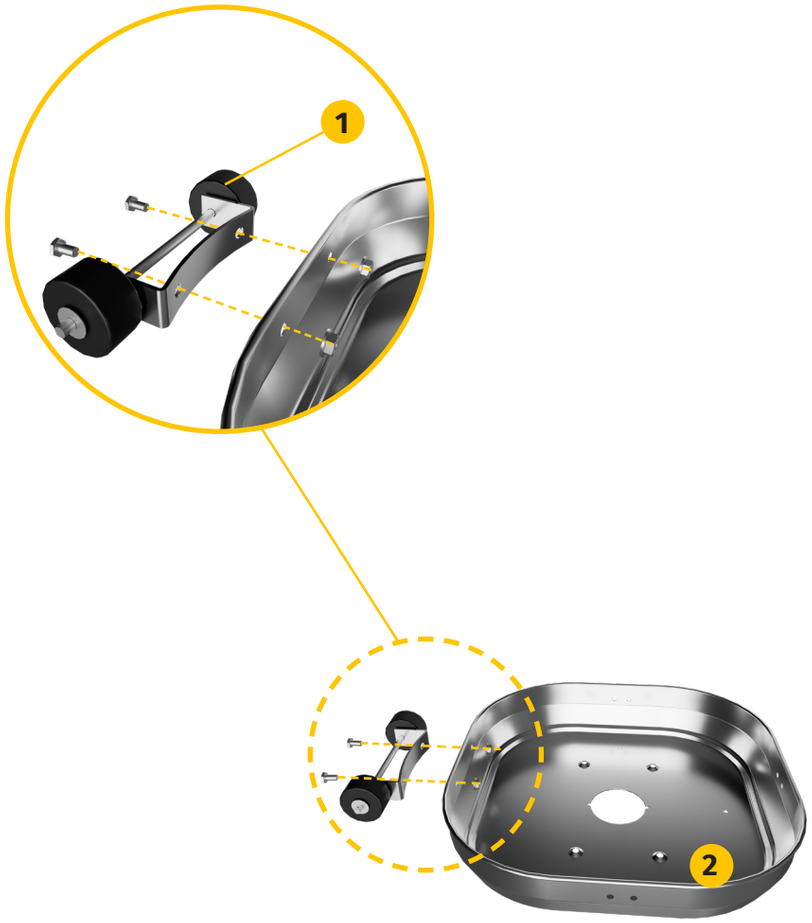

2 Connect the anchoring arm (A) to the base with 6 M6 nuts and 6 washer bolts (B) .

A X 3 PCS

B X 6 PCS

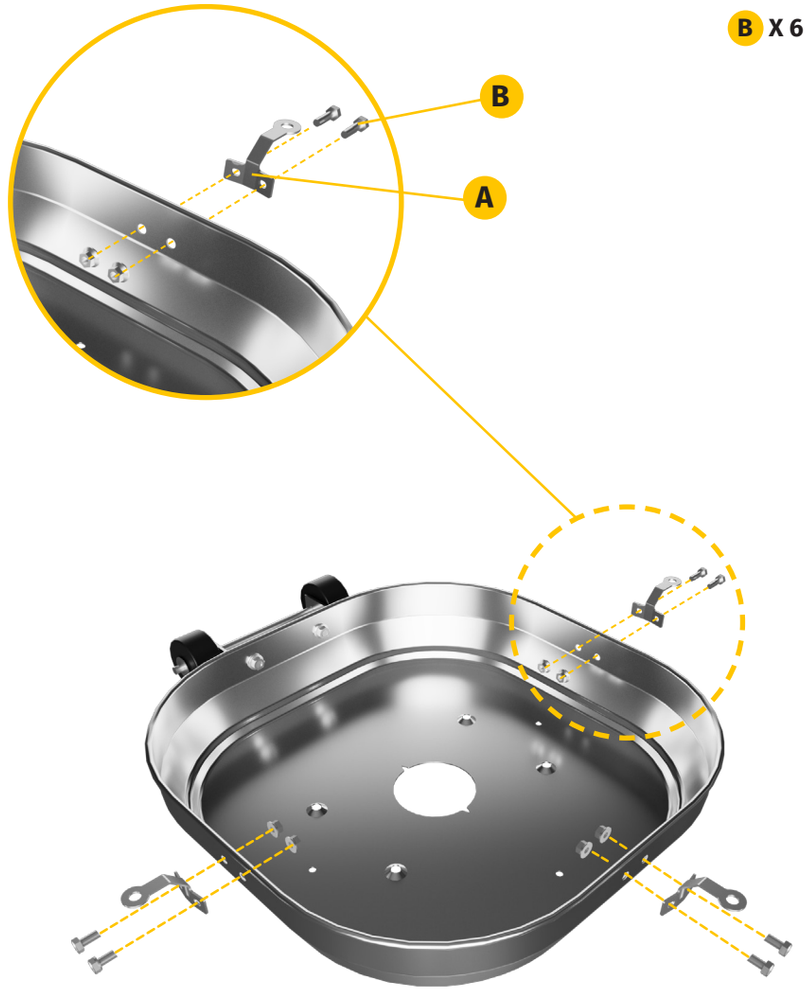

3

Screw 3 support brackets③ to the base with 3 M8x16 bolts (D).

D X 3 PCS

TIPS: Keep the bracket with the belt in the middle.

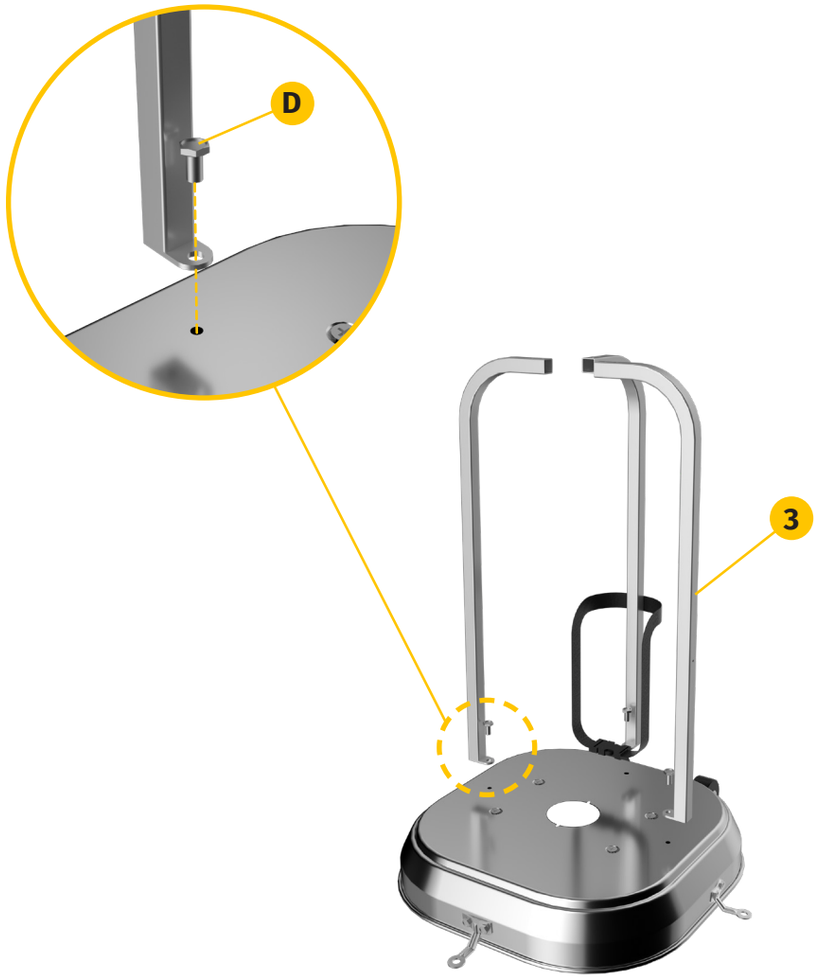

4

Attach lower post④ to support brackets using 6 bolts M6x30 and 6 M6 flange nuts(E).

E X 6 PCS

TIPS: Secure bolts tightly.

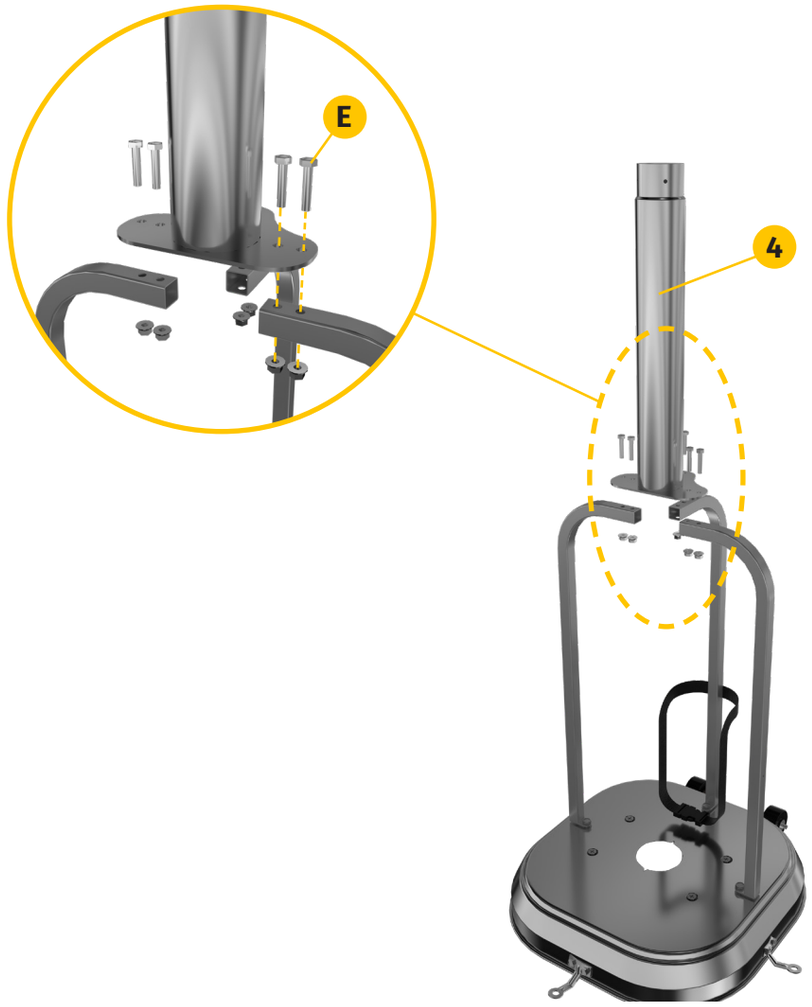

5

Place the cylinder housing⑥ on top of the assembly.

6

Put the burner assembly⑦ on a flat surface or on the ground first.
Then insert the regulator from the top end of the upper post⑤.

TIPS: The sticker is located on the same side as the ignition button.

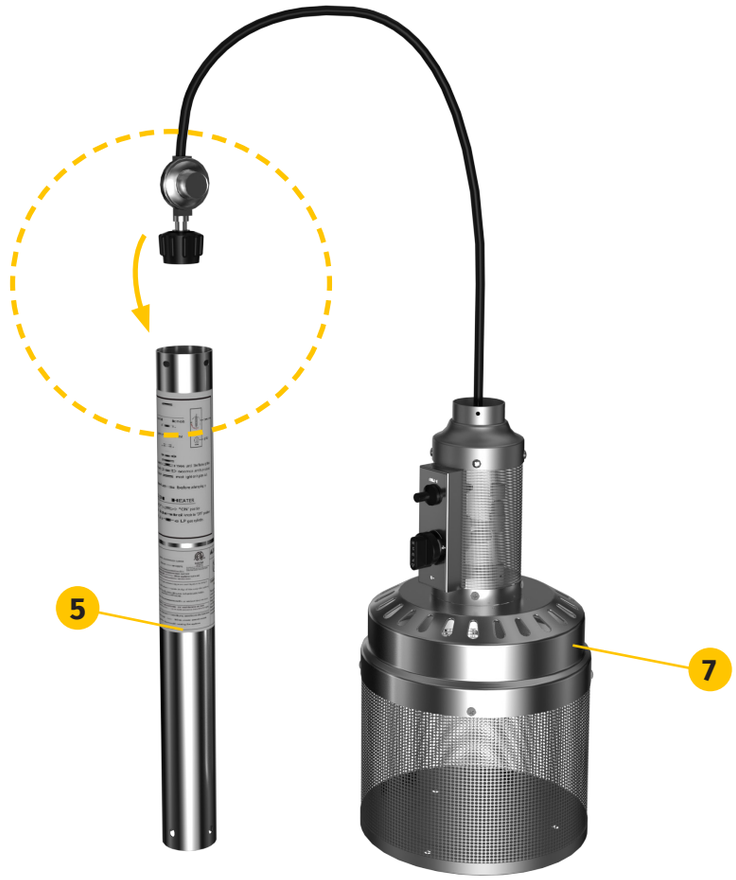

7

Attach the burner assembly to upper post using the 4 washer bolts (F).

F X 4 PCS

TIPS: Secure bolts tightly.

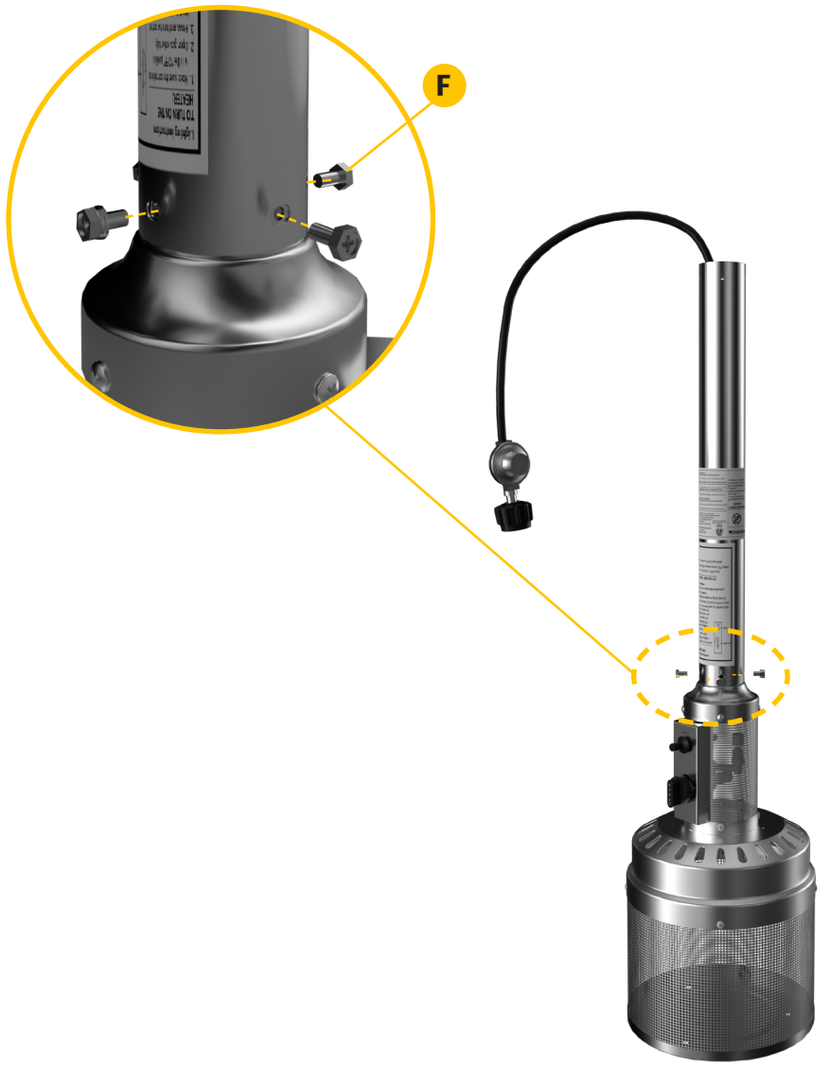

8

Connect the 3 pieces reflector⑧ panels together with 3 washer bolts(F) and 3 cap nuts(G).

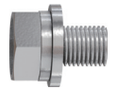

F X 3 PCS

G X 3 PCS

TIPS: If needed, loosen each screw prior to further assembly.

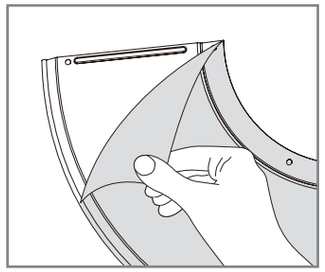

Remove the protective film before assembly.

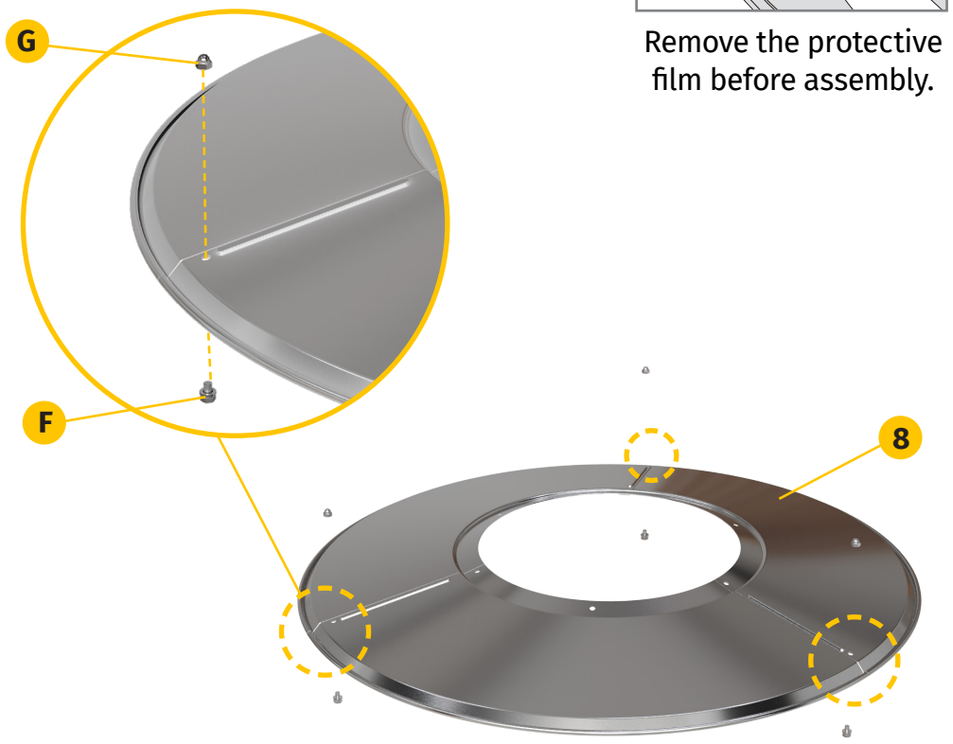

9

Attach the reflector⑨ plate to the installed 3 reflector panels with 6 washer bolts(F) and 6 cap nuts(G).

F X 6 PCS

G X 6 PCS

TIPS: Secure bolts tightly.

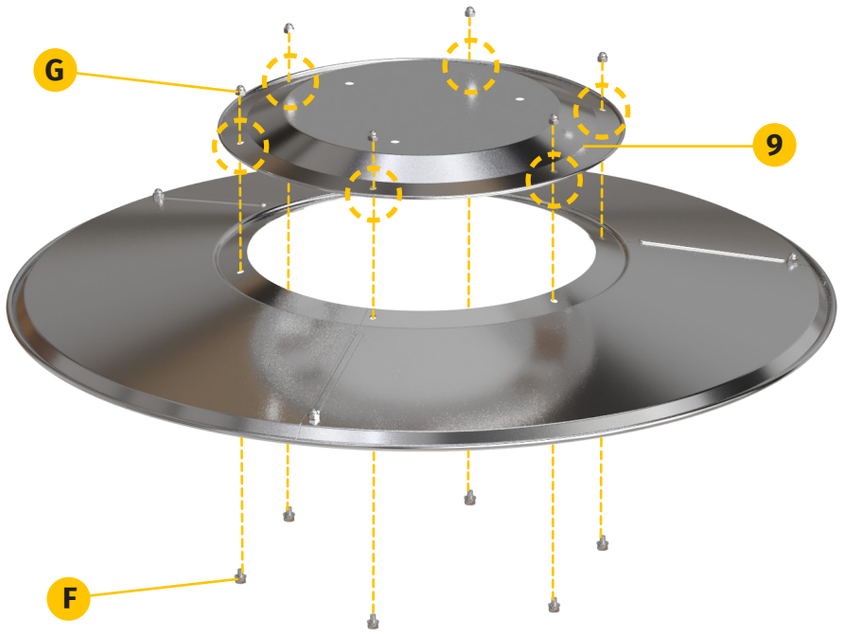

10

Attach 3 reflector studs (I) and 3 M8 washers (H) to burner assembly firstly. Tighten the reflector studs.

I X 3 PCS

H X 3 PCS

TIPS: Be careful not to press the hose during assembly to prevent cuts and gas leakage.

11

Attach the reflector assembly made in step 8 to the top of the reflector studs on the burner assembly. Fasten with 6 M8 washers(H) and 3 wing nuts(J) .

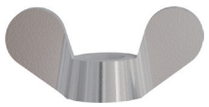

J X 3 PCS

H X 6 PCS

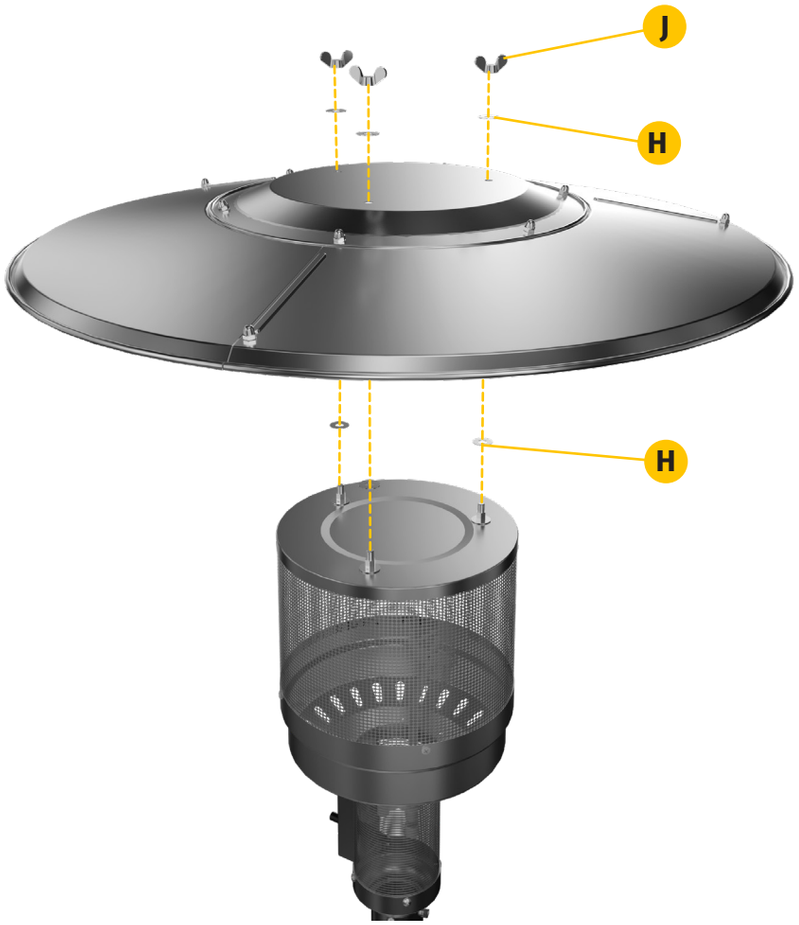

12

Insert the regulator from the top end of the lower post.

Insert upper post to lower post, then tighten 2 posts using 4 post bolts(K).

K X 4 PCS

TIPS: If necessary, loosen each screw before further assembly. Take care to prevent from tipping over during installation.

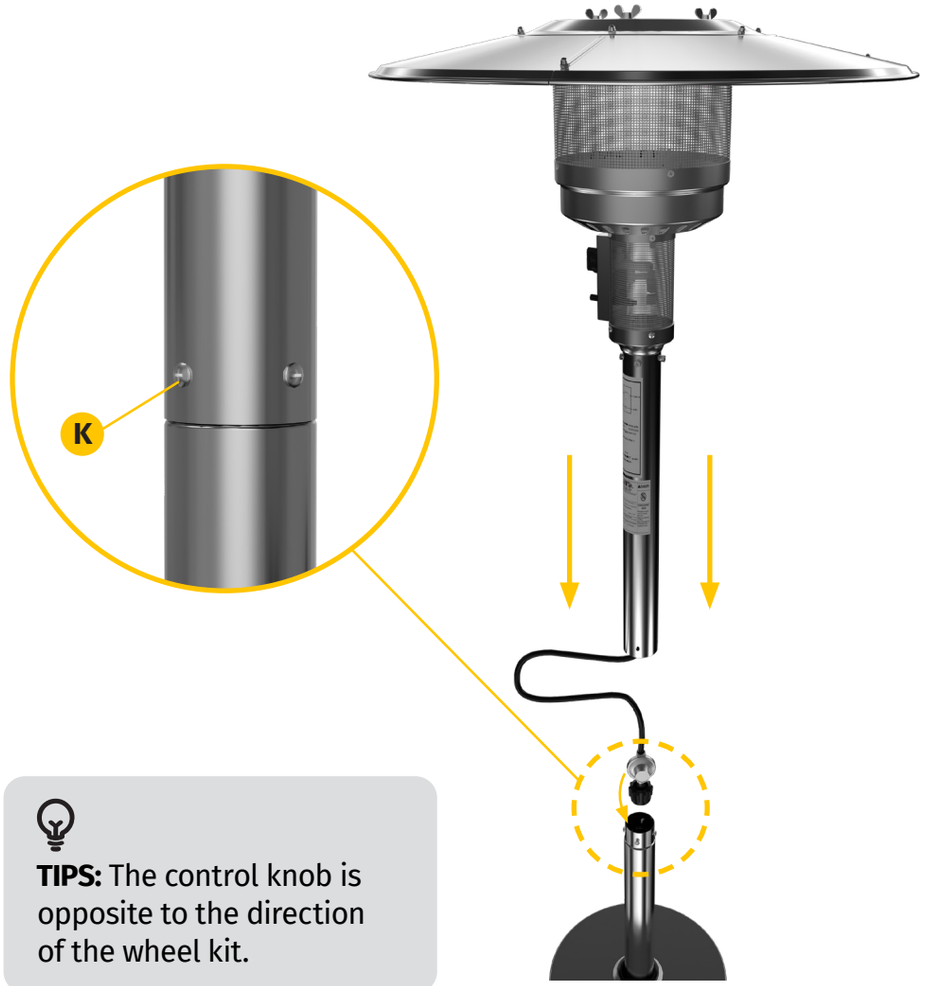

TIPS: The control knob is opposite to the direction of the wheel kit.

13

Place the 20 lb gas cylinder (sold separately) in the center of the base and fasten it with the webbing.

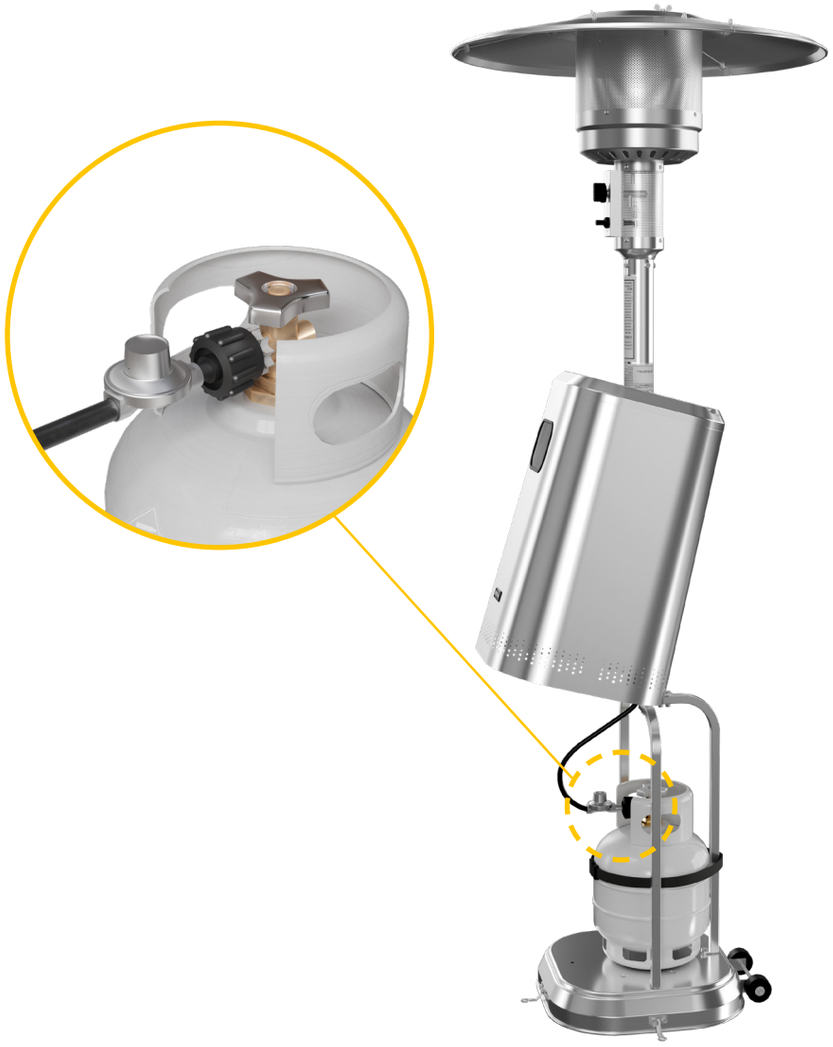

14

First use an electric screwdriver to drill four holes in the floor.

Attach 4pcs plastic expansion tube into ground, then use 3 M4X25 self-tapping screws and 3 M6 washers (M) through ground fixtures to fix products on ground.

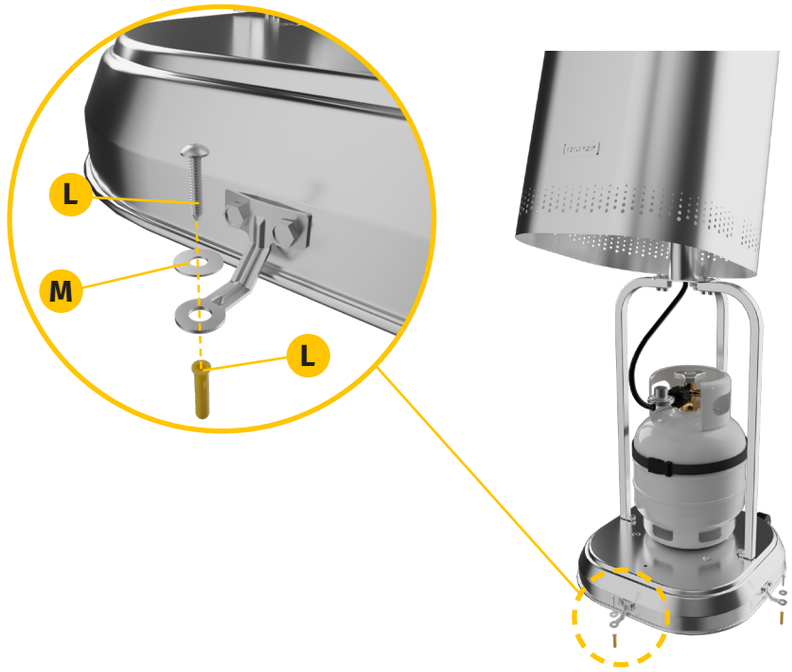

TIPS: Fixing the heater on the ground with the screws may cause damage to your wooden deck or concrete floor. If you don't want to damage your deck or floor, you can also buy a sand box separately in East Oak store to add the base weight to make it more stable.

ASSEMBLY INSTRUCTIONS

- Connect hose and regulator to cylinder.
- The propane gas and cylinder are sold separately.
- Every part of the heater shall be secure against displacement and shall be constructed to maintain a fixed relationship between essential parts under normal and reasonable conditions of handling and usage. Parts not permanently secured shall be designed so they cannot be incorrectly assembled and cannot be improperly located or misaligned in removing or replacing during cleaning or other servicing.

Use a standard 20 lb. propane cylinder only (approximately 12.2 in. / 31cm. in diameter and 17.9 in. / 45.5cm high).

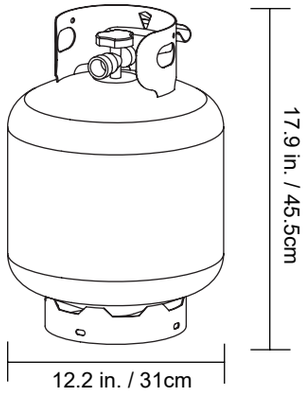

Standard 20 lb. tank

- Use this heater only with a propane vapor withdrawal supply system. See chapter 5 of the standard for storage and handling of liquefied petroleum gas, ANS/NFPA 58. Your local library or fire department should have this book.
- Storage of an appliance indoors is permissible only if the cylinder is disconnected and removed from the appliance. A cylinder must be stored outdoors in a well-ventilated area out of the reach of children. A disconnected cylinder must have dust caps tightly installed and must not be stored in a building, garage or any other enclosed area. The maximum inlet gas supply pressure: 250 psi /1750 kPa.
- The minimum inlet gas supply pressure: 5 psi /35kPa. Manifold pressure with regulator provided: 11 inch W.C/ 2.74 kPa. The minimum hourly of 17000 Btu /4.98 kW is required input rating for an appliance for automatic operation at ratings less than full input rating.
- The pressure regulator and hose assembly supplied with the appliance must be used.
- The installation must conform with local codes, or in the absence of local codes, with national fuel gas code, ANS Z223.1/NFPA54, natural gas and propane Installation Code, CSA B149.1, or propane storage and handling code, B149.2.

- The knob on the propane tank must be closed. Make sure that the knob is turned clockwise to a full stop. The cylinder supply system must be arranged for vapor withdrawal. Check that the control knob on the control unit is turned off. Hold the regulator in one hand and insert the nipple into the valve outlet. Be sure the nipple is centered in the valve outlet. The coupling nut connects to the large outside threads on the valve outlet. Hand-tighten the coupling nut clockwise until it comes to a full stop. Firmly tighten by hand only.

ASSEMBLY INSTRUCTIONS

To Disconnect: Fully close the tank valve by turning clockwise. Turn the coupling nut counterclockwise until the regulator assembly detaches.

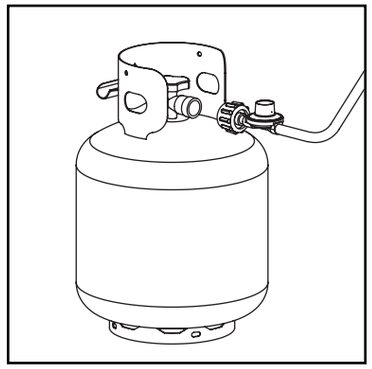
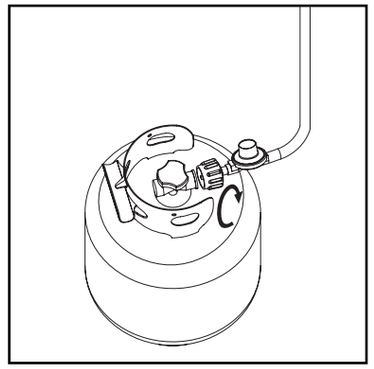
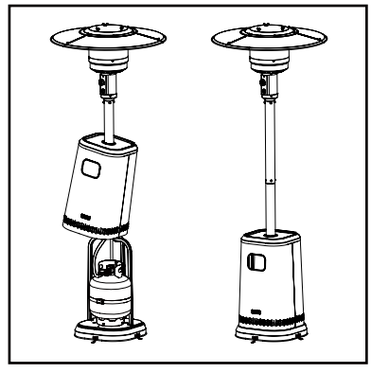

- A dented, rusted or damaged propane cylinder may be hazardous and should be checked by your cylinder supplier. Never use a propane cylinder with a damaged valve connection.
- The propane cylinder must be constructed and marked in accordance with the specifications for propane gas cylinders of the U.S. Department of Transportation (DOT) or the standard for cylinders, spheres and tubes for transportation of dangerous goods and commission, CAN/CSA-B339.
- The cylinder must have a listed overfilling prevention device.
- The cylinder must have a connection device compatible with the connection for the appliance.
- The cylinder used must include a collar to protect the cylinder valve.
- Never connect an unregulated propane cylinder to the heater.
- Attach regulator to cylinder. Complete attachment.
- Install cylinder.

⚠ WARNING

- Do not store a spare propane gas cylinder under or near this appliance;
- Never fill the cylinder beyond 80 percent full;
- Place the dust cap on the cylinder valve outlet whenever the cylinder is not in use. Only install the type of dust cap on the cylinder valve that is provided with the cylinder valve. Other type of caps or plugs may result in leakage of propane.

OPERATION INSTRUCTIONS

LEAK CHECK

⚠ WARNING

- Perform all leak tests outdoors.
- Extinguish all open flames.
- NEVER leak test when smoking.
- Do not use the heater until all connections have been leak tested and do not leak.

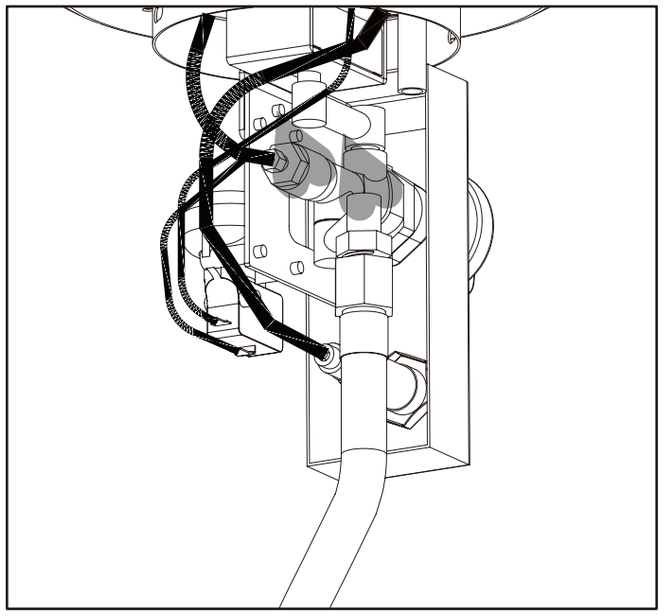

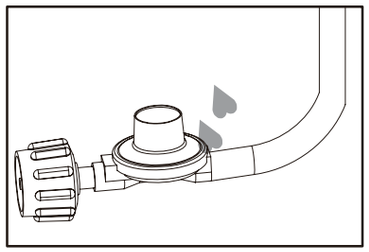

Hose / Regulator connection

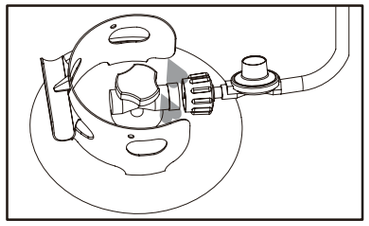

Regulator / Cylinder connection

1. Make 2-3 oz. of leak check solution (one part liquid dishwashing detergent and three parts water).
2. Apply several drops of solution where hose attaches to regulator.
3. Apply several drops of solution where regulator connects to cylinder.
4. Make sure all patio heater and light valves are OFF.
5. Turn cylinder valve ON.

If bubbles appear at any connection, there is a leak.

1. Turn cylinder valve OFF.
2. If leak is at hose/regulator connection: tighten connection and perform another leak test. If bubbles continue appearing, the hose should be returned to the place of purchase.
3. If leak is at regulator/cylinder valve connection: disconnect, reconnect, and perform another leak check. If you continue to see bubbles after several attempts, cylinder valve is defective and should be returned to cylinder's place of purchase.

If NO bubbles appear at any connection, the connections are secure.

NOTE: Whenever gas connections are loosened or removed, you must perform a complete leak test.

4. Complete installation.

⚠ DANGER

- CARBON MONOXIDE HAZARD
- For outdoor use only. Never use inside house, or other unventilated or enclosed areas. This heater consumes air (oxygen). Do not use in unventilated or enclosed areas to avoid endangering your life.

⚠ CAUTION

- Do not attempt to operate until you have read and understand all General Safety Information in this manual and all assembly is complete and leak checks have been performed.
- This appliance shall be used only in a well-ventilated space and shall not be used in a building, garage or any other enclosed area.

An appliance may be installed with shelter no more inclusive than:

a. With walls on all sides, but with no overhead cover.

b. Within a partial enclosure which includes an overhead cover and no more than two side walls. These side walls may be parallel, as in a breezeway, or at right angles to each other.

c. Within a partial enclosure which includes an overhead cover and three side walls, as long as 30 percent or more of the horizontal periphery of the enclosure is permanently open.

OPERATION INSTRUCTIONS

Before Turning Gas Supply ON:

1. Your heater was designed and approved for outdoor use only. Do NOT use it inside a building, garage, or any other enclosed area.
2. Make sure surrounding areas are free of combustible materials, gasoline, and other flammable vapors or liquids.
3. Ensure that there is no obstruction to air ventilation. Be sure all gas connections are tight and there are no leaks.
4. Be sure the cylinder cover is clear of debris. Be sure any component removed during assembly or servicing is replaced and fastened prior to starting.

Before Lighting:

1. Heater should be thoroughly inspected before each use, and by a qualified service person at least annually. If relighting a hot heater, always wait at least 5 minutes.
2. Inspect the visible portion of the hose before each use of the appliance. If the hose leaks, it must be replaced prior to operation. Only use the replacement hose assembly specified by manufacturer.
3. The pressure regulator and hose assembly supplied with the appliance must be used. Replacement pressure regulators and hose assemblies must be those specified by the appliance manufacturer.

LIGHTING INSTRUCTIONS

TO **TURN ON** THE HEATER:

1

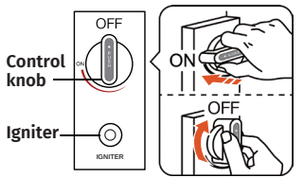

Make sure the control knob is in the "**OFF**" position. If not, press and turn to it.

2

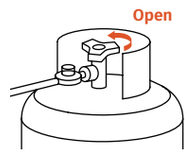

Open gas valve fully.

3

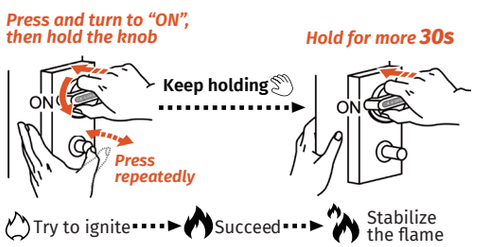

- Press and turn the control knob to the "ON" position, and pressing the igniter button multiple times to ignite the heater. After igniting, hold the knob for more about 30 seconds.The knob is continuously pressed throughout the entire process.
- Note: If ignition fails, turn off the LP gas and restart from the first step after 5 minutes. Repeat this process multiple times.
- If ignition is still failed, please contact support@eastoak.com.

TO **TURN OFF** THE HEATER:

1

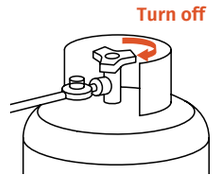

Turn off the valve on the LP gas cylinder.

2

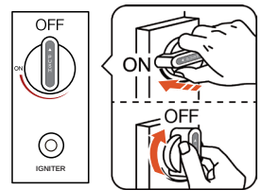

Press and turn the control knob to the "**OFF**" position.

If you experience any ignition problem please consult "Troubleshooting" on page 39.

CAUTION: Avoid inhaling fumes emitted from the heater's first use. Smoke and odor from the burning of oils used in manufacturing will appear. Both smoke and odor will dissipate after approximately 30 minutes. The heater should NOT produce thick black smoke.

NOTE: The burner may be noisy when initially turned on. Turn the knob to the level of heat desired.

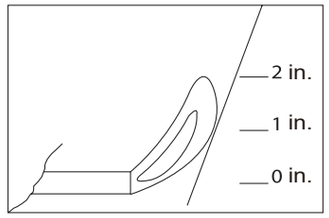

Normal

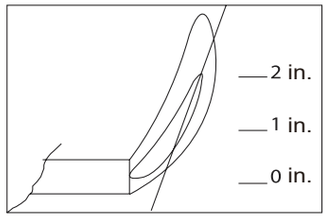

Abnormal

WARNING **FOR YOUR SAFETY**

Be careful when attempting to manually ignite this heater. Holding in the control knob for more than 10 seconds before igniting the gas will cause a ball of flame upon ignition.

When heater is ON:

Emitter screen will become bright red due to intense heat. The color is more visible at night. Burner will display tongues of blue and yellow flame. These flames should not be yellow or produce thick black smoke, indicating an obstruction of airflow through the burners. The flame should be blue with straight yellow tops. If excessive yellow flame is detected, turn off heater and consult "Troubleshooting" on page 39.

OPERATION INSTRUCTIONS

Re-lighting:

1. Turn control knob to OFF.
2. Repeat the “Lighting” steps on prior page.

WARNING **FOR YOUR SAFETY**

Heater will be hot after use. Handle with extreme care.

Shut Down:

Turn cylinder valve clockwise to OFF and disconnect regulator when heater is not in use.

NOTE: After use, some discoloration of the emitter screen is normal.

Operation Checklist

For a safe and pleasurable heating experience, perform this check before each use.

Before Operating:

1. I am familiar with entire owner’s manual and understand all precautions noted.
2. All components are properly assembled, intact and operable.
3. No alterations have been made.
4. All gas connections are secure and do not leak.
5. Wind speed is below 10 mph.
6. Unit will operate at reduced efficiency below 40°F.
7. Heater is outdoors (outside any enclosure).
8. There is adequate fresh air ventilation.
9. Heater is away from gasoline or other flammable liquids or vapors.
10. Heater is away from windows, air intake openings, sprinklers, and other water sources.
11. Heater is at least 48 in. on top and at least 48 in. on sides from combustible materials.
12. Heater is on a hard and level surface.
13. There are no signs of spider or insect nests.
14. All burner passages are clear.
15. All air circulation passages are clear.
16. Children and adults should be alerted to the hazards of high surface temperatures and should stay away to avoid burns or clothing ignition.
17. Young children should be carefully supervised when they are in the area of the heater.
18. Clothing or other protective material should not be hung from the heater, or placed on or near the heater.

After Operation

1. Gas control is in OFF position.
2. Gas tank valve is OFF.
3. Disconnect gas line.

CARE AND MAINTENANCE

WARNING **FOR YOUR SAFETY**

- Do NOT touch or move heater for at least 45 minutes after use.
- Reflector is hot to the touch.
- Allow reflector to cool before touching.

To enjoy years of outstanding performance from your heater, make sure you perform the following maintenance activities on a regular basis:

Keep exterior surfaces clean.

1. Use warm soapy water for cleaning. Never use flammable or corrosive cleaning agents.

2. While cleaning your unit be sure to keep the area around the burner and pilot assembly dry at all times. Do not submerge the control valve assembly. If the gas control is submerged in water, do NOT use it. It must be replaced.

a. Keep the appliance area clear and free from combustible materials, gasoline, and other flammable vapors and liquids.

b. Do not obstruct the flow of combustion and ventilation air.

c. Keep the ventilation opening(s) of the cylinder enclosure free and clear from debris.

3. Air flow must be unobstructed. Keep controls, burner, and circulating air passageways clean.

Visually checking portions of the hose assembly located within the confines of the heater post. Inspect the entire hose assembly at least annually, disassembling the reflector and burner. Inspect the hose assembly for evidence of excessive abrasion, cuts, or wear. Suspected areas should be leak tested. Then assembling the reflector and burner again following with step 11 and 12.

Signs of possible blockage include:

- Gas odor with extreme yellow tipping of flame.
- Heater does NOT reach the desired temperature. Heater glow is excessively uneven.
- Heater makes popping noises.
- Spiders and insects can nest in burner or orifices. This dangerous condition can damage the heater and render it unsafe for use. Clean burner holes by using a heavy-duty pipe cleaner. Compressed air may help clear away smaller particles.
- Carbon deposits may create a fire hazard. Clean dome and burner screen with warm soapy water if any carbon deposits develop.

Note: In a salt-air environment (such as near an ocean) corrosion occurs more quickly than normal. Frequently check for corroded areas and repair them promptly.

TIPS: Use high-quality automobile wax to help maintain the appearance of your heater. Apply to exterior surfaces from the pole down. Do not apply to emitter screen or domes.

Storage

Between uses:

- Turn Control Knob OFF.
- Disconnect propane cylinder.
- Store heater upright in an area sheltered from direct contact with inclement weather (such as rain, sleet, hail, snow, dust ,and debris).
- If desired, cover heater to protect exterior surfaces and to help prevent build-up in air passages.
- Never leave propane cylinder exposed to direct sunlight or excessive heat.

Note: Wait until heater is cool before covering.

During periods of extended inactivity or when transporting:

- Turn Control Knob OFF.
- Disconnect propane source and move to a secure, well-ventilated location outdoors.
- Store heater upright in an area sheltered from direct contact with inclement weather (such as rain, sleet, hail, snow, dust, and debris).
- If desired, cover heater to protect exterior surfaces and to help prevent build-up in air passages.
- Never leave propane cylinder exposed to direct sunlight or excessive heat.

Note: Wait until heater is cool before covering.

Service

Only a qualified service person should repair gas passages and associated components.

CAUTION: Always allow heater to cool before attempting service.

TROUBLE SHOOTING

Problem	Cause	Solution
The burner will not light.	The burner injector is clogged.	Clean the burner injector.
	There is low gas supply pressure.	Contact your gas supplier.
The burner flame goes off immediately after ignition.	There is low gas pressure.	Contact your gas supplier.
The ignition is delayed.	The main burner carryover ports are clogged.	Clean the main burner ports.
	There is low gas pressure.	Contact your gas supplier.
The combustion on the burner is inadequate.	There is not enough air.	Check the air passageways and burners for dirt and debris, and clean with compressed air.
The burner flame is low.	The supply hose is bent or twisted.	Straighten the hose and perform a leak test.
	There is blockage in the burner injector.	Clean or replace the burner injector.
The emitter glows uneven.	There is blockage in the burner injector.	Clean or replace the burner injector.
	The base is not on a level surface.	Place the heater on a level surface.
	The gas pressure is low.	Replace the cylinder with a new cylinder.
There is slight smoke and odor during initial operation.	This is residue from the manufacturing process.	This will stop after approximately 30 minutes of operation.
There is thick black smoke.	There is blockage in the burner.	Turn off the heater and let it cool. Remove the blockage and clean the inside and outside of the burner.
The heater produces a whistling noise when the burner is lit.	Air passageways are blocked.	Check the minimum installation clearances and air passageways for debris.
	There is air in the gas line.	Operate the burner until the air is completely purged.
The heater produces a clicking noise just after the burner is lit or turned off.	The metal is expanding and contracting.	This is common with heaters. If noise is excessive, contact a qualifled service person.
There is a gas odor even when the control knob is in the OFF position.	There is a gas leak.	Locate and correct the leak immediately.
	The gas control is defective.	Replace the gas control.
There is a gas odor during combustion.	There is foreign matter in the gas or on the burner ports.	Check the gas passageway and burner.
	The heater is burning vapors from paint or impurities in the air.	Stop storing and using odor causing products near the heater.
	There is gas leaking from the regulator and hose connection, the valve and pipe connections, and the pipes.	Locate and correct the leaks, or contact your gas supplier.
There is carbon build-up.	There is dirt or film on the reflector and flame screen	Clean the reflector and flame screen.

FEATURES

- 50,000 BTU heat output provides a heating range of up to 20-foot diameter and up to 314 square feet of warmth.
- 304 Stainless Steel double-cover heating mesh: compared with traditional patio heaters, our heaters are sturdier, and more durable.
- Featuring a unique square table propane tank cover, the heater has a convenient design for you to put some snacks, drinks, phones, or other small items.
- Our patio heaters offer a triple-safety protection system that ensures your well-being.
- Simple, one-touch, easy button allows the operator to light the heater.

⚠ WARNING

Cancer and reproductive harm
www.P65Warnings.ca.gov.

WARRANTY POLICY

EAST OAK warrants this Patio Heater for the components, coverage, and warranty period listed in the table below under normal use and proper maintenance. The limited warranty is valid for the original retail purchaser from the date of initial retail purchase through the term of the limited warranty period.
The warranty period and coverage for the replacement parts shall be as follows:

Warranty Periods and Coverage

Components	Warranty Period	Coverage
Burner Assembly	1 Year	Material and Manufacturing Defects
Cylinder Housing/Lower Post/Upper Post	1 Year	Will not rust through
Base/Reflector Shield/ Regulator/Gas Hose/ Ignition/Control Knob/ Support Bracket/Wheel Kit	3 Years	Material and Manufacturing Defects

Not Covered:

- UV damage: ultra-violet damage to coat.
- Normal wear and tear, cosmetic blemishes occurring as a result of use (scratches or dents etc.).
- Damage caused by misuse, accident, abuse, or improper care.
- Damage caused by acts of nature (storm damage, wind damage, etc.).
- Arbitrarily repair or modification by the customer.

During the limited warranty period for the product, East Oak will provide parts, repair, or replace your product, at our discretion, due to any defect in materials or manufacturing defects.
East Oak will provide replacement parts, but the customer will be responsible for installation.

Patio Heater 50000 BTU

EAST OAK

support@eastoak.com
eastoak.com
1-833-EAST-OAK (USA)

100101020002-M-2.1.20240626