Item #1001225415
Model #CP0902

HAMPTON BAY®

USE AND CARE GUIDE

BOURLAND SEMI FLUSHMOUNT

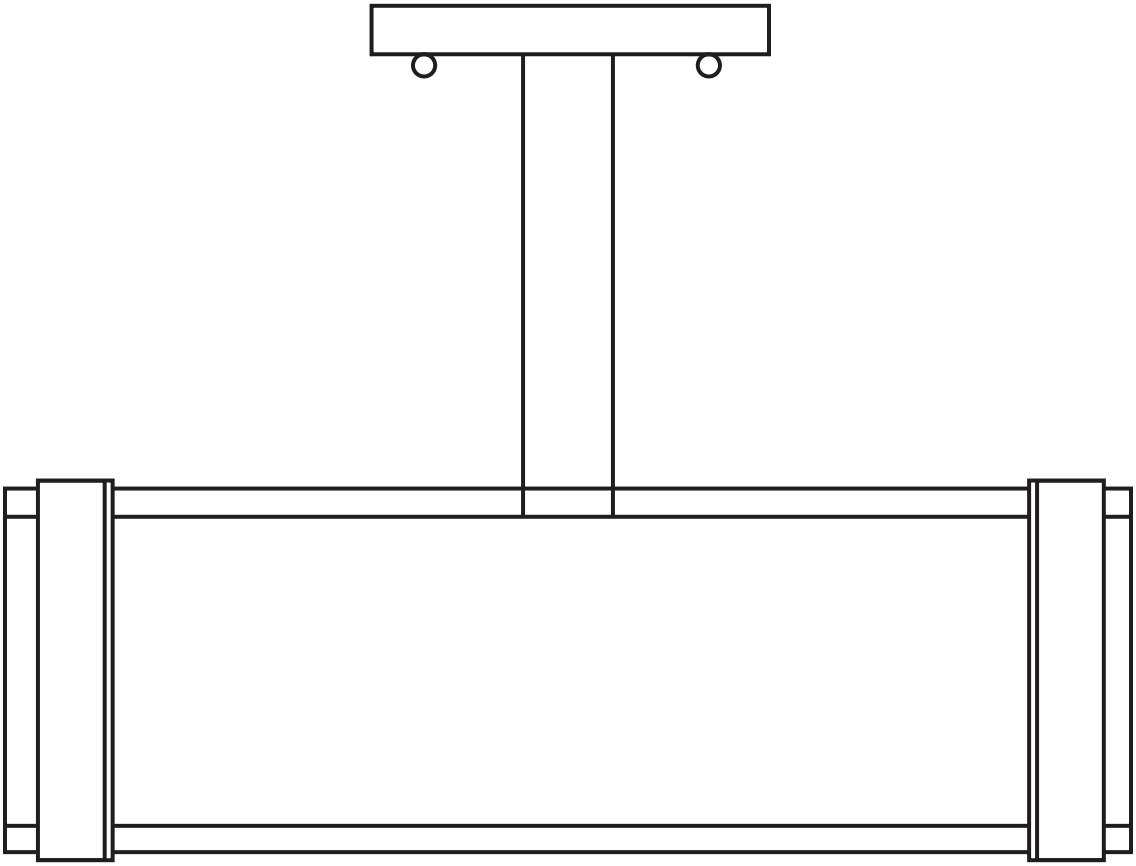

Questions, problems, missing parts? Before returning to the store,
call Hampton Bay Customer Service
8 a.m. - 7 p.m., EST, Monday – Friday, 9 a.m. – 6 p.m., EST, Saturday

1-855-HD-HAMPTON

HAMPTONBAY.COM

THANK YOU

We appreciate the trust and confidence you have placed in Hampton Bay through the purchase of this light fixture. We strive to continually create quality products designed to enhance your home. Visit us online to see our full line of products available for your home improvement needs. Thank you for choosing Hampton Bay!

Table of Contents

Table of Contents 2
Safety Information 2
Warranty 2
Pre-Installation 3
Planning Installation 3
Package Contents 4
Installation 5
Operation 7
Care and Cleaning 7
Troubleshooting 7

Safety Information

- Consult a qualified electrician if you have any electrical questions.

CAUTION: Inspect the wire insulation for any cuts, abrasions, or exposed copper that may have resulted during shipping. If there is a defect in the wire, do not attempt installation. Please call our Customer Service Team at 1-855-HD-HAMPTON.

WARNING: Before starting installation of this fixture or removal of a previous fixture, disconnect the power by turning off the circuit breaker or by removing the fuse at the fuse box.

Warranty

The manufacturer warrants this lighting fixture to be free from defects in materials and workmanship for a period of three (3) years from date of purchase. This warranty applies only to the original consumer purchaser and only to products used in normal use and service. If this product is found to be defective, the manufacturer's only obligation, and your exclusive remedy, is the repair or replacement of the product at the manufacturer's discretion, provided that the product has not been damaged through misuse, abuse, accident, modifications, alterations, neglect, or mishandling. This warranty shall not apply to any product that is found to have been improperly installed, set-up, or used in any way not in accordance with the instructions supplied with the product. This warranty shall not apply to a failure of the product as a result of an accident, misuse, abuse, negligence, alteration, faulty installation, or any other failure not relating to faulty material or workmanship. This warranty shall not apply to the finish on any portion of the product, such as surface and/or weathering, as this is considered normal wear and tear. The manufacturer does not warrant and specially disclaims any warranty, whether express or implied, of fitness for a particular purpose, other than the warranty contained herein. The manufacturer specifically disclaims any liability and shall not be liable for any consequential or incidental loss or damage, including but not limited to any labor / expense costs involved in the replacement or repair of said product.

Contact the Customer Service Team at 1-855-HD-HAMPTON or visit www.HAMPTONBAY.com.

Pre-Installation

PLANNING INSTALLATION

- ☐ Read all instructions before installation.
- ☐ To avoid damaging this product, assemble it on a soft, non-abrasive surface, such as carpet or cardboard.
- ☐ Keep your receipt and these instructions for proof of purchase.

TOOLS REQUIRED

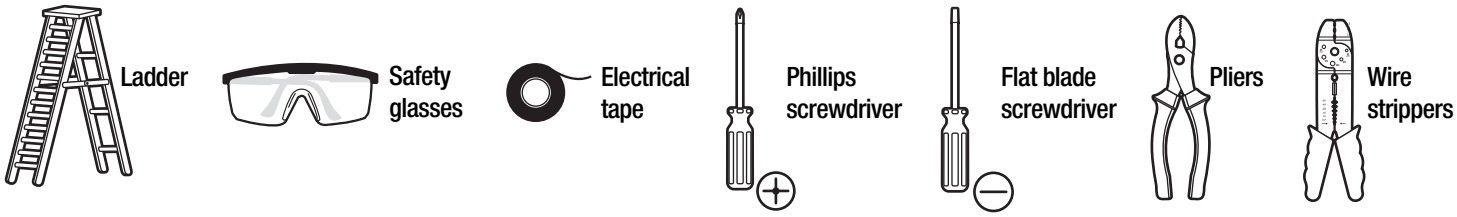

HARDWARE INCLUDED

NOTE: Hardware not shown to actual size.

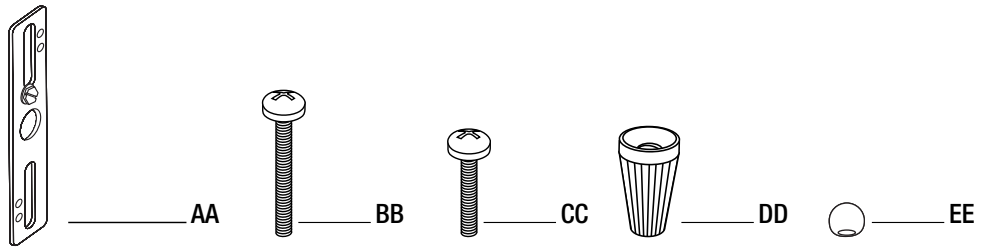

Part	Description	Quantity
AA	Mounting unit	1
BB	Mounting screw	2
CC	Support screw	2
DD	Wire nut	3
EE	Cap nut	2

PACKAGE CONTENTS

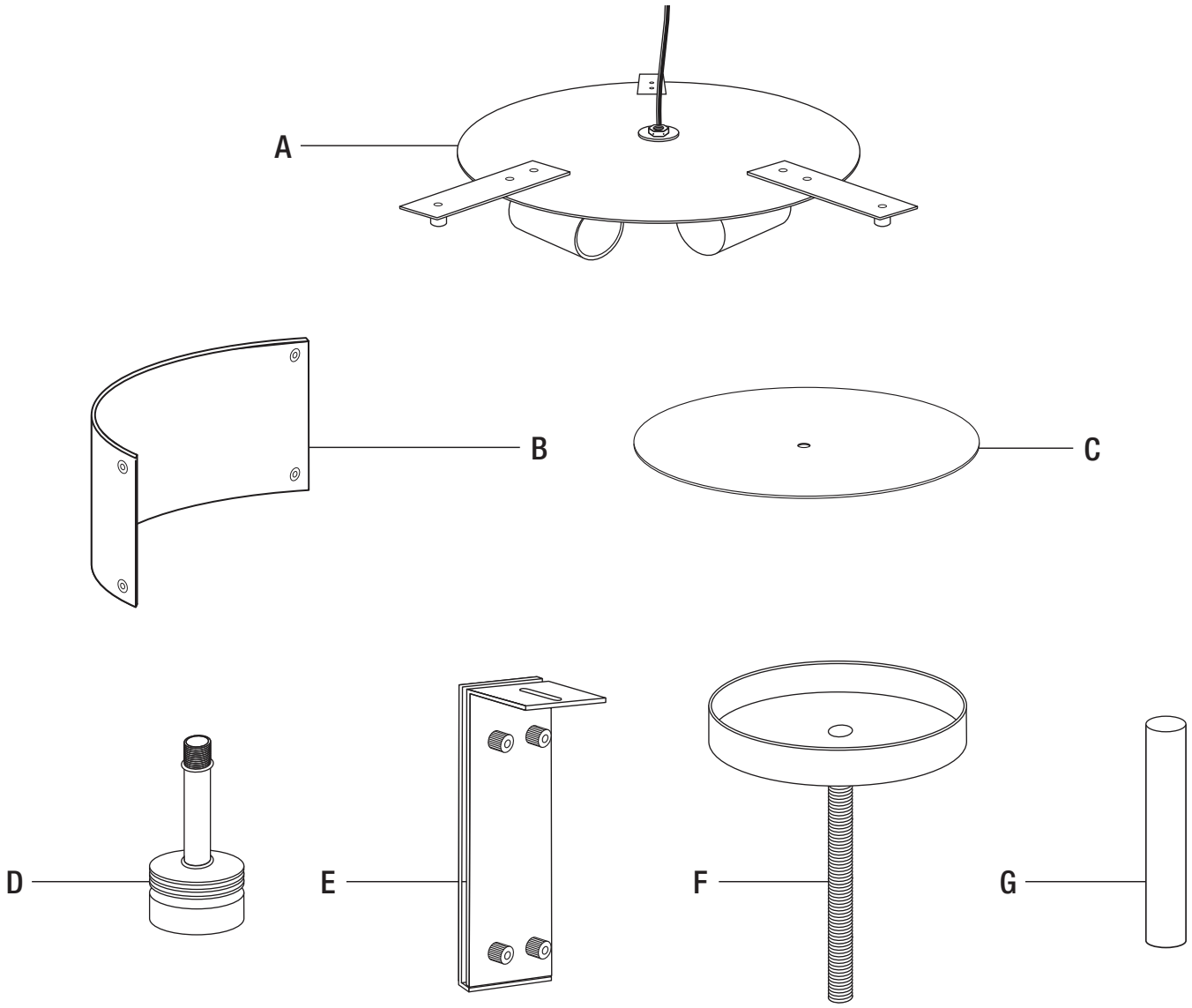

Part	Description	Quantity
A	Lighting fixture	1
B	Glass shade	3
C	Glass disc	1
D	Pipe nipple	1
E	Metal clip	3
F	Canopy	1
G	Tube	1

Installation

1 Attaching metal clips to glass shades

- ☐ Remove the thumb screws and L-bracket from the pre-assembled metal clips (E).
- ☐ Place the screw through the glass shades (B) as shown.

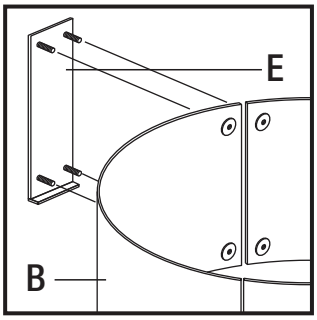

2 Securing the metal clip

- ☐ Place the previously removed L-bracket on the metal clip and secure with the previosuly removed thumb screws.

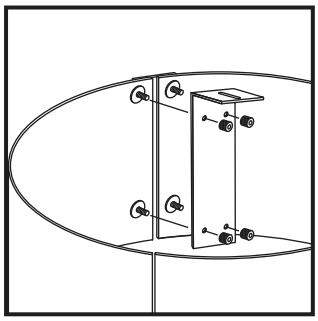

3 Attaching metal clips to the fixture

- ☐ Remove the pre-installed thumb screws from the fixture (A) and use them to secure the L-brackets on the metal clips (E) to the fixture (A).

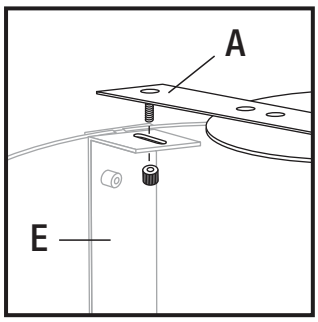

4 Attaching the canopy to the fixture

- ☐ Thread the wires from the fixture (A) through the metal tube (G) and the canopy (F) and secure the canopy (F) to the fixture (A).

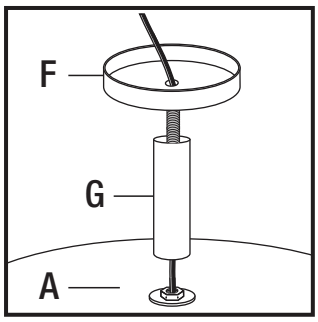

5 Installing the light bulbs

- ☐ Install three 60-watt max. medium- base incandescent bulbs or three 13-watt max. CFL bulbs (none included)
- ☐ Remove the pre-installed washers and finial from the pipe nipple (D). Secure the pipe nipple (D) to the fixture (A) and place the previously removed metal washer and plastic washer. Add the glass disc (C) and secure with the previously removed plastic washer and finial.

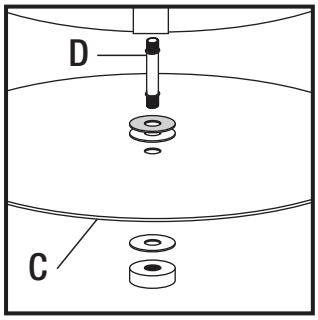

6 Attaching the mounting bracket to the junction box

- ☐ Screw the support screws (CC) into the mounting unit (AA).
- ☐ Attach the mounting unit (AA) to the junction box (not included) with mounting screws (BB).

NOTE: The preinstalled support screws on the mounting unit (AA) should protrude out away from the junction box.

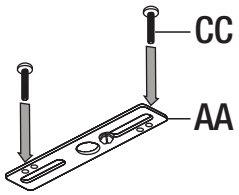

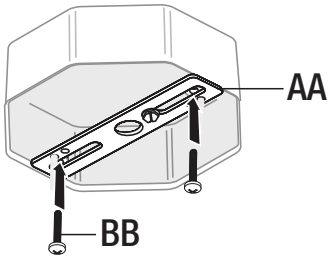

7 Making the electrical connections

- ☐ Connect the copper wire from the light fixture (A) to the mounting unit (AA) by securing it with the preinstalled ground screw.
- ☐ Connect the black to black (power), the white to white (neutral) and copper wire to ground wire with the wire nuts (DD) and secure with electrical tape (not included).

NOTE: If the wires from the fixture are the same color, attach the side with markings or letters to the black (positive) wire and the other to the white (neutral) wire.

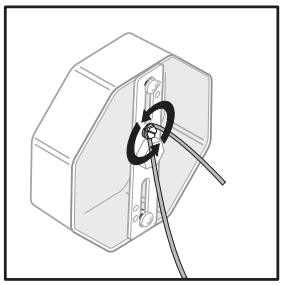

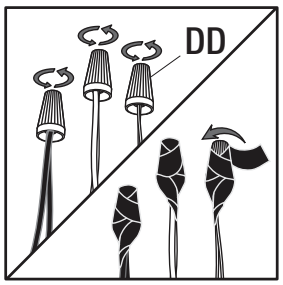

8 Securing the canopy to the outlet box

- ☐ Secure the canopy (F) to the junction box by placing the holes in the canopy (F) over the support screws (CC). Secure with the cap nuts (EE) as shown.

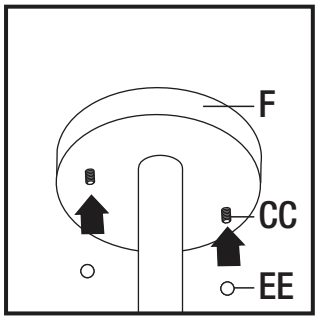

Operation

1 Turning on the light

- Turn the light switch on to activate the fixture.

Care and Cleaning

- Clean the lamp with a soft, dry cloth.
- Do not use any cleaners with chemicals, solvents, or harsh abrasives.

Troubleshooting

Problem	Possible Cause	Possible Cause
The bulb will not light.	The bulb is burned out.	Replace the light bulb.
	The power is off.	Ensure the power supply is On.
	There is a faulty wire connection.	Check the wiring.
	The circuit breaker is off.	Ensure the circuit breaker is in the ON position.
The fuse blows or circuit breaker trips when the light is turned on.	There are crossed wires or the power wire is grounding out.	Check the wire connections. Contact a qualified electrician or call the Customer Service Team at 1-855-HD-HAMPTON.

HAMPTON BAY®

Questions, problems, missing parts? Before returning to the store,
call Hampton Bay Customer Service
8 a.m. – 7 p.m., EST, Monday – Friday, 9 a.m. – 6 p.m., EST, Saturday

1-855-HD-HAMPTON

HAMPTONBAY.COM

Retain this manual for future use.