Bestway®

DO NOT RETURN

TO THE STORE

QUESTIONS? PROBLEMS?
MISSING PARTS?

For FAQ, Manuals, Videos Or
Spare Parts, Please Visit
bestwaycorp.com/support

bestwaycorp.com/support

OWNER'S MANUAL

Para la instrucción en español, visite bestwaycorp.com/support

Visit Bestway YouTube channel YouTube

303021229739

Pre-Installation Checklist

- The pool must be set up on a completely flat and level surface. Please do not install the pool if the surface is inclined or sloped.
- The selected location must be capable of uniformly supporting the weight for the entire time the pool is installed with water, moreover the location must be flat, must be cleared of all objects and debris including stones and twigs.
- The pool must be away from any objects children could use to climb into the pool.
- Position the pool near an adequate drainage system to deal with overflow or to discharge the pool. We recommend picking a location that is at least 20ft. away from your home.

Incorrect conditions to set up the pool:

- On uneven ground the pool may collapse causing serious personal injury and/or damage to personal property and will void the warranty and prevent any service claims.
- Sand should not be used to create a level base; the ground must be dug out if necessary.
- Directly under overhead power lines or trees. Be sure the location does not contain underground utility pipes, lines orcables of any kind.
- Do not set up the pool on driveways, decks, platforms, gravel or asphalt surfaces. The selected location should be firm enough to withstand the pressure of the water; Mud, sand, soft / loose soil or tar are not suitable.
- Grass or other vegetation under the pool will die and may cause odors and slime to develop, therefore we recommend removing all grass from the selected pool location.
- Avoid areas prone to aggressive plant and weed species that may grow through the ground cloth or liner.

Pre-installation:

Bestway will not be responsible for damage caused to the pool due to mishandling or failure to follow these instructions.

1. Lay out all parts and check that you have the correct quantities as listed in the components list. If you are missing any part do not assemble the pool, contact Bestway Customers Service.
2. Spread out the pool and make sure the pool is right side up, let it sit exposed to direct sunlight for 1 hour or more so that the pool is more flexible during set up.
3. Place the pool near an adequate drainage system to deal with overflow water and ensure the pool's inlet A and outlet B are correctly positioned to allow your filter pump to connect to a power source.

NOTES:

- Do not use extension power cords to power your pump.
- Do not drag the pool on the ground, this can damage the pool.
- Check with your local city council for by-laws relating to fencing, barriers, lighting and safety requirements and ensure you comply with all laws.
- If have a filter pump, refer to the pump's manual for instructions.

The ladder must match the pool size and should to be used only for entering and exiting the pool. It is forbidden to exceed the permitted payload of the ladder. Check regularly if the ladder is properly assembled.

WARNING

smooth out the bottom

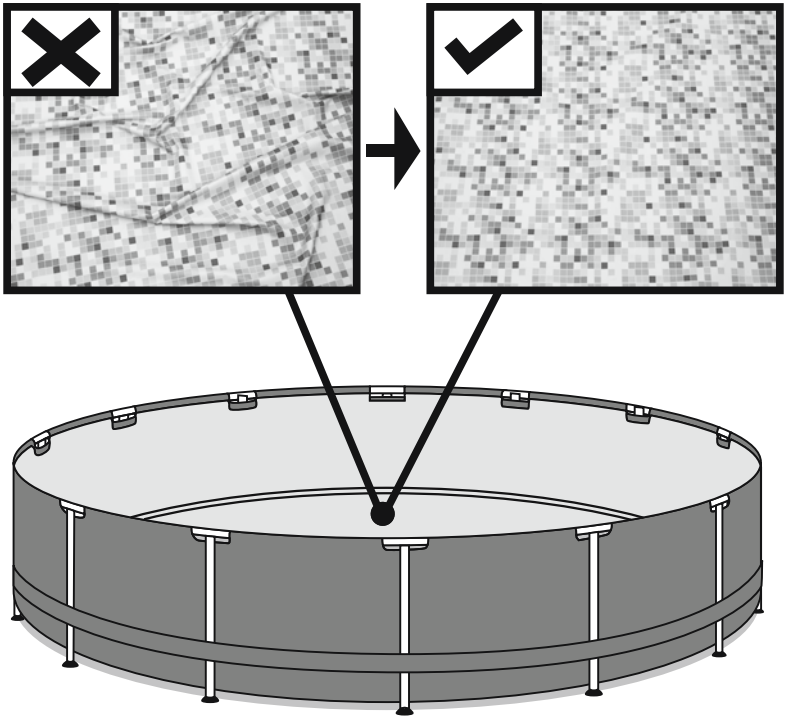

Put 1in. to 2in. water in the pool to cover the floor. Once pool floor is slightly covered, gently smooth out all wrinkles. Start in the center of the pool and work your way clockwise to the outside.

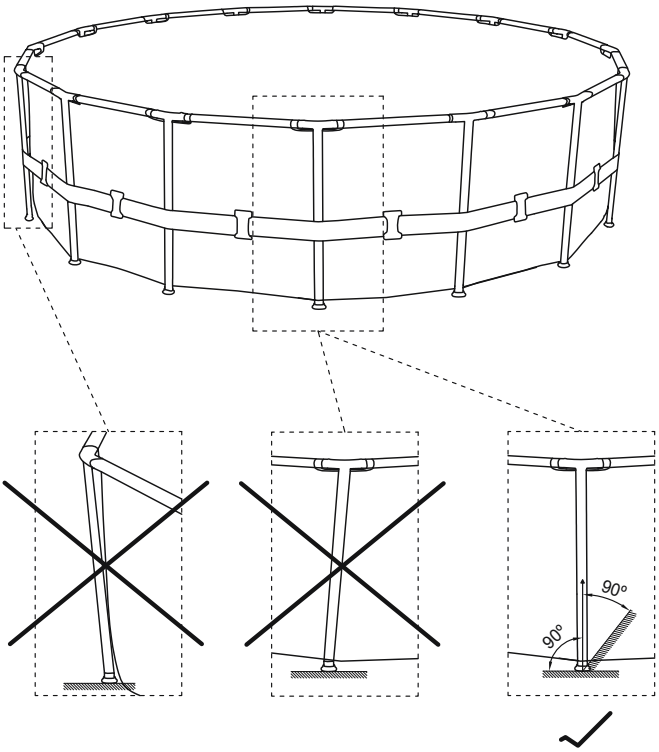

After the installation of the pool's steel frame is completed, ensure that the verticals are perpendicular to the ground. If they aren't, the verticals could be bent or deformed.

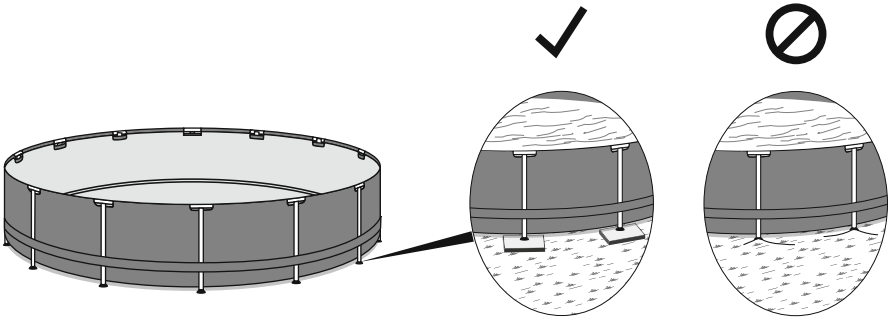

Do not assemble with pool legs on soft lawn. If you must assemble the pool on a soft surface, timber boards (not included) must be placed under the feet of the vertical support rods for even weight distribution.
The timber board must meet two conditions:
1). The thickness is less than 1cm.
2). The board should not touch the pool liner.

WARNING

IMPORTANT SAFETY INSTRUCTIONS
Read and Follow All Safety Information and Instructions. Keep for future reference. Failure to follow these warnings and instructions can result in serious injury or death to users, especially children.

⚠ WARNING

Prevent Drowning

Children under 5 are at highest risk for drowning.
Closely watch children who are *in or near* this pool.

⚠ WARNING

No Diving

You can break your neck and be paralyzed!

⚠ WARNING

Electrocution Risk

Keep all electrical lines, radios, speakers, and other electrical devices away from pool. Do not place pool near or under overhead electrical lines.

⚠ WARNING

Stay away from drains & suction fittings

If drain or suction outlet cover is missing or broken, your hair, body, and jewelry can get sucked into drain. You could be held under water & drown! Do not use pool if drain or suction outlet cover is missing or broken.

Prevent Young Children From Drowning:
Install fencing or approved barrier around all sides of pool.
State or local laws or codes may require fencing or other approved barriers. Check state or local laws and codes before setting up pool.
Drowning occurs silently and quickly. Assign an adult to supervise pool and wear provided water watcher tag.
Keep children in your direct sight when they are in or near pool and when you are filling and emptying pool.
When searching for a missing child, check pool first, even if you think your child is in the house.
Pool presents a drowning hazard even during filling and draining of the pool.
Maintain constant supervision of children and do not remove any safety barriers until the pool is completely empty and stowed away.
Refer to the list of barrier recommendations and guidelines as described in CPSC Publication No.362.
Assign an adult to be responsible for watching children in the pool. Give this person a “water watcher” tag and ask that they wear it the entire time they are in charge of supervising children in the pool. If they need to leave for any reason, ask this person to pass the “water watcher” tag and the supervision responsibility to another adult.
Locate pumps and filters in such a way that children cannot climb on them to gain access to pool.
If you have a ladder, refer to the ladder's manual for instructions.
If you have a pump, refer to the pump's manual for instructions.

Prevent Young Children From Gaining Access to Pool:
Remove pool ladders before leaving pool. Toddlers can climb ladder and get into pool.
Position furniture away from pool so that children cannot climb and gain access to pool.
When leaving pool, remove floats and toys from pool that might attract a child.

Be Prepared to Respond to an Emergency:
Keep a working phone and list of emergency numbers near pool.
Become certified in cardiopulmonary resuscitation (CPR) so you can respond to an emergency.

Electrocution Risk:
Keep all electrical lines, radios, speakers, and other electrical devices away from pool.
Do not place pool near or under overhead electrical lines.

Suction Risk:
Replacement pump should never exceed the maximum flow rate marked on the suction fitting.

For further safety tips check out the following websites:
www.homesafetycouncil.org
http://www.safety-council.org/info/child/water.html
www.safekids.org
www.nspi.org

Safety Barrier Guidelines for Residential Swimming Pool
Section I: Outdoor swimming pool
An outdoor swimming pool, including an inground, aboveground, or onground pool, hot tub, or spa, should be provided with a barrier which complies with the following:

1. The top of the barrier should be at least 48 inches above grade measured on the side of the barrier which faces away from the swimming pool. The maximum vertical clearance between grade and the bottom of the barrier should be 4 inches measured on the side of the barrier which faces away from the swimming pool. Where the top of the pool structure is above grade, such as an aboveground pool, the barrier may be at ground level, such as the pool structure, or mounted on top of the pool structure. Where the barrier is mounted on top of the pool structure, the maximum vertical clearance between the top of the pool structure and the bottom of the barrier should be 4 inches.
2. Openings in the barrier should not allow passage of a 4-inch diameter sphere.
3. Solid barriers, which do not have openings, such as a masonry or stone wall, should not contain indentations or protrusions except for normal construction tolerances and tooled masonry joints.
4. Where the barrier is composed of horizontal and vertical members and the distance between the tops of the horizontal members is less than 45 inches, the horizontal members should be located on the swimming pool side of the fence. Spacing between vertical members should not exceed 1-3/4 inches in width. Where there are decorative cutouts, spacing within the cutouts should not exceed 1-3/4 inches in width.
5. Where the barrier is composed of horizontal and vertical members and the distance between the tops of the horizontal members is 45 inches or more, spacing between vertical members should not exceed 4 inches. Where there are decorative cutouts, spacing within the cutouts should not exceed 1-3/4 inches in width.
6. Maximum mesh size for chain link fences should not exceed 1-3/4 inch square unless the fence is provided with slats fastened at the top or the bottom which reduce the openings to no more than 1-3/4 inches.
7. Where the barrier is composed of diagonal members, such as a lattice fence, the maximum opening formed by the diagonal members should be no more than 1-3/4 inches.
8. Access gates to the pool should comply with Section I, Paragraphs 1 through 7, and should be equipped to accommodate a locking device. Pedestrian access gates should open outward, away from the pool, and should be self-closing and have a self-latching device. Gates other than pedestrian access gates should have a self-latching device. Where the release mechanism of the self-latching device is located less than 54 inches from the bottom of the gate, (a) the release mechanism should be located on the pool side of the gate at least 3 inches below the top of the gate and (b) the gate and barrier should have no opening greater than 1/2 inch within 18 inches of the release mechanism.
9. Where a wall of a dwelling serves as part of the barrier, one of the following should apply:
   (a) All doors with direct access to the pool through that wall should be equipped with an alarm which produces an audible warning when the door and its screen, if present, are opened. The alarm should sound continuously for a minimum of 30 seconds within 7 seconds after the door is opened. Alarms should meet the requirements of UL2017 General-Purpose Signaling Devices and Systems, Section 77. The alarm should have a minimum sound pressure rating of 85 dBA at 10 feet and the sound of the alarm should be distinctive from other household sounds, such as smoke alarms, telephones, and door bells. The alarm should automatically reset under all conditions. The alarm should be equipped with manual means, such as touchpads or switches, to temporarily deactivate the alarm for a single opening of the door from either direction. Such deactivation should last for no more than 15 seconds. The deactivation touchpads or switches should be located at least 54 inches

above the threshold of the door.
(b) The pool should be equipped with a power safety cover which complies with ASTM F1346-91 listed below.
(c) Other means of protection, such as self-closing doors with self-latching devices, are acceptable so long as the degree of protection afforded is not less than the protection afforded by (a) or (b) described above.

10. Where an aboveground pool structure is used as a barrier or where the barrier is mounted on top of the pool structure, and the means of access is a ladder or steps, then (a) the ladder to the pool or steps should be capable of being secured, locked or removed to prevent access, or(b) the ladder or steps should be surrounded by a barrier which meets Section I, Paragraphs 1 through 9. When the ladder or steps are secured, locked, or removed, any opening created should not allow the passage of a 4-inch diameter sphere.

Section II: Barrier Locations

Barriers should be located so as to prohibit permanent structures, equipment or similar objects from being used to climb the barriers.

WARNING

NO DIVING! Shallow water.	PREVENT DROWNING
	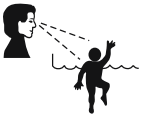
You can be permanently injured.	Watch children at all times.

Only for outdoor use.
Teach your children to swim.
Never dive, jump, or slide into the pool.
Adult supervision is always required.
Parents should learn CPR.
Never swim alone.
Keep all electrical radios, speakers and other appliances away from the swimming pool.
When you touch the filter, pump, or electrical parts, be sure the ground under your feet is “Bone Dry.”
All electrical outlets should have a GFCI and connections should be a minimum of 5 feet (1.52 m) from the outside perimeter of the wall of the pool. From 5–10 feet (1.52–3.05 m), there should be either a fixed connection (outlet box) or twistlock connection with a GFCI.
Connect power cords to a 3-wire grounding-type outlet only.
Keep all breakable objects out of the pool area.
Alcohol consumption and pool activities do not mix. Never allow anyone to swim, dive or slide under the influence of alcohol or drugs.
Severe electrical shock could result if you install your pump or filter on a deck. The pump or filter could fall into the water, causing severe shock or electrocution.
Do not install on a deck or other surface at, above, or slightly below the top rail of the pool.
Do not use the pool during severe weather conditions, i.e. electrical storms, tornadoes, etc.
Be aware of overhead power lines when vacuuming your pool or using a telescoping pole.
Do not allow diving, climbing, sitting, or standing on the top rails of the pools.
Do not allow roughhousing and horseplay.
Do not engage in extended breath holding activities underwater; you may black out and drown.
Install a pool ladder(s) or staircase for entry and exit from the pool.
Keep deck clean and clear of objects that may create a tripping hazard.
Check regularly for signs of wear or loose bolts that could make the deck unsafe.
Instruct pool users about the proper use of all pool ladder(s) and staircases.
Face ladder going up or down.
Allow only one person at a time on the ladder.
Check all nuts and bolts regularly to ensure that the ladder stays sturdy.
Remove or secure the ladder to prevent entry to pool when not in use.
Please contact pool site dealer or manufacturer for additional safety signs if deemed necessary.
For pool service, select a certified pool professional.

Any equipment connected to the circulation systems shall be positioned so as to prevent their being used as a means of access to the pool by young children.
The installation must comply with the codes of the authority having jurisdiction and may require permits for building, plumbing electrical, zoning, etc.
The pool shall be located a minimum distance of 6 ft. (1.83 m) from any electrical receptacle.
All 125 volt, 15 and 20 ampere receptacles located within 20 ft. (6.0 m) of the pool shall be protected by a ground fault circuit interrupter (GFCI). The 20 ft. (6 m) distance is measured via the shortest straight line distance the supply cord would follow without piercing a floor, wall, ceiling, doorway, window, or other permanent barrier.

Prior to use of the pool, the installer shall affix all no diving signs and safety signs in accordance with installation instructions so they can be easily visible.
A barrier is necessary to provide protection against potential drowning and near drowning and that barriers are not a substitute for the constant supervision of children.
A list of emergency telephone numbers shall be posted, such as the nearest available police, fire, ambulance, and/or rescue unit. These numbers are to be kept near the telephone that is closest to the pool.
Toys, chairs, tables, or similar objects that a young child could climb shall be at least 4 feet (1219 mm) from the pool.
If deck is used by the installer, it will need to comply with APSP-8.
Basic lifesaving equipment, including one of the following, shall be on hand at all times: a. A light, strong, rigid pole (shepherd’s crook) not less than 12 ft. (3.66 m) long. b. A minimum ¼ in. (6 mm) diameter rope as long as 1½ times the maximum width of the pool or 50 feet (15.24 m), whichever is less, which has been firmly attached to a Coast Guard-approved ring buoy, or a similarly approved flotation devices.
The swimming pool cover is not designated as a safety barrier.
Please use artificial lighting during nighttime pool use, to illuminate all safety signs, ladders, steps, deck surfaces and walks.
The pool is subject to wear and deterioration. If not maintained properly, certain types of excessive or accelerated deterioration can lead to failure of the pool structure that might release large quantities of water that could cause bodily harm and property damage.
The bottom of the pool shall be visible at all times from the outside perimeter of the pool.
The installer of the vinyl liner shall affix on the original or replacement liner, or on the pool structure, all safety signs in accordance with the manufacturer’s instructions.
If you have a filter pump, refer to the pump’s manual for instructions.
The ladder shall be located on a solid base and the ladder shall be installed per the ladder’s instructions.
Publications are available that describe the risk of drowning, entrapment, and diving accidents. Available publications related to pool safety include the Association of Pool and Spa Professionals’ (APSP) booklets entitled: The Sensible Way to Enjoy Your Aboveground/Onground Swimming Pool, Children Aren’t Waterproof, Pool and Spa Emergency Procedures for Infants and Children, Layers of Protection, and the latest published edition of ANSI/APSP-8 Model Barrier Code for Residential Swimming Pools, Spas, and Hot Tubs.

For additional safety information, see www.APSP.org.
THIS PRODUCT IS COMPLIANT TO ANSI/ APSP 4 AMERICAN NATIONAL STANDARD FOR
ABOVEGROUND POOLS / ONGROUND RESIDENTIAL SWIMMING POOLS & INTERNATIONAL SWIMMING POOL & SPA CODE (ISPSC)
(Only for USA & only for pools with a water depth of more than 36in.(914mm))

Please read carefully and keep for future reference

Installation usually takes approximately 20 -30 minutes with 2-3 people excluding earthworks and filling.
Part descriptions.

STEEL PRO™

A

Top Rail

SIZE	ITEM#	PART CODE	QTY
10 ft. x 30 in. (3.05 m x 76 cm)	#256002001083 #256002001084	P04398	10
12 ft. x 30 in. (3.66 m x 76 cm)	#256002001087 #256002001088	P04398	12

B

Vertical Pool Leg

SIZE	ITEM#	PART CODE	QTY
10 ft. x 30 in. (3.05 m x 76 cm)	#256002001083 #256002001084	P04399	10
12 ft. x 30 in. (3.66 m x 76 cm)	#256002001087 #256002001088	P04399	12

C

T-connector

SIZE	ITEM#	PART CODE	QTY
10 ft. x 30 in. (3.05 m x 76 cm)	#256002001083 #256002001084	P04400	10
12 ft. x 30 in. (3.66 m x 76 cm)	#256002001087 #256002001088	P04401	12

D

Pin

SIZE	ITEM#	PART CODE	QTY
10 ft. x 30 in. (3.05 m x 76 cm)	#256002001083 #256002001084	P61020ASS16	22
12 ft. x 30 in. (3.66 m x 76 cm)	#256002001087 #256002001088	P61020ASS16	26

E

Footing

SIZE	ITEM#	PART CODE	QTY
10 ft. x 30 in. (3.05 m x 76 cm)	#256002001083 #256002001084	P61010ASS16	10
12 ft. x 30 in. (3.66 m x 76 cm)	#256002001087 #256002001088	P61010ASS16	12

F

Pin Gasket

SIZE	ITEM#	PART CODE	QTY
10 ft. x 30 in. (3.05 m x 76 cm	#256002001083 #256002001084	P04429	22
12 ft. x 30 in. (3.66 m x 76 cm)	#256002001087 #256002001088	P04429	26

G

Liner

SIZE	ITEM#	PART CODE	QTY
10 ft. x 30 in. (3.05 m x 76 cm)	#256002001083 #256002001084	P04455	1
12 ft. x 30 in. (3.66 m x 76 cm)	#256002001087 #256002001088	P04459	1

H

Hose Adaptor

SIZE	ITEM#	PART CODE	QTY
10 ft. x 30 in. (3.05 m x 76 cm)	#256002001083 #256002001084	P6H1420ASS16	1
12 ft. x 30 in. (3.66 m x 76 cm)	#256002001087 #256002001088	P6H1420ASS16	1

I

Stopper

SIZE	ITEM#	PART CODE	QTY
10 ft. x 30 in. (3.05 m x 76 cm)	#256002001083 #256002001084	P6C1418ASS19	3
12 ft. x 30 in. (3.66 m x 76 cm)	#256002001087 #256002001088	P6C1418ASS19	3

J

Drain Valve Cap

SIZE	ITEM#	PART CODE	QTY
10 ft. x 30 in. (3.05 m x 76 cm)	#256002001083 #256002001084	P6H1158ASS16	1
12 ft. x 30 in. (3.66 m x 76 cm)	#256002001087 #256002001088	P6H1158ASS16	1

STEEL PRO MAX™

A

Top Rail

SIZE	ITEM#	PART CODE	QTY
10 ft. x 30 in. (3.05 m x 76 cm)	#256002001091 #256002001092	P04740	10
12 ft. x 30 in. (3.66 m x 76 cm)	#256002001094	P04740	12
12 ft. x 39.5 in. (3.66 m x 1.00 m)	#256002001123	P04402	12
12 ft. x 48 in. (3.66 m x 1.22 m)	#256002001127	P04402	12
14 ft. x 33 in. (4.27 m x 84 cm)	#B56597	/	0
14 ft. x 42 in. (4.27 m x 1.07 m)	#256002001047	/	0
15 ft. x 42 in. (4.57 m x 1.07 m)	#B56686	/	0
15 ft. x 48 in. (4.57 m x 1.22 m)	#256002001119	/	0
18 ft. x 48 in. (5.49 m x 1.22 m)	#256002001129	/	0

B

Top Rail

SIZE	ITEM#	PART CODE	QTY
10 ft. x 30 in. (3.05 m x 76 cm)	#256002001091 #256002001092	/	0
12 ft. x 30 in. (3.66 m x 76 cm)	#256002001094	/	0
12 ft. x 39.5 in. (3.66 m x 1.00 m)	#256002001123	/	0
12 ft. x 48 in. (3.66 m x 1.22 m)	#256002001127	/	0
14 ft. x 33 in. (4.27 m x 84 cm)	#B56597	P61793ASS18	14
14 ft. x 42 in. (4.27 m x 1.07 m)	#256002001047	P61793ASS18	14
15 ft. x 42 in. (4.57 m x 1.07 m)	#B56686	P61793ASS18	15
15 ft. x 48 in. (4.57 m x 1.22 m)	#256002001119	P61793ASS18	15
18 ft. x 48 in. (5.49 m x 1.22 m)	#256002001129	P61798ASS18	18

C

Vertical Pool Leg

SIZE	ITEM#	PART CODE	QTY
10 ft. x 30 in. (3.05 m x 76 cm)	#256002001091 #256002001092	P04403	10
12 ft. x 30 in. (3.66 m x 76 cm)	#256002001094	P04403	12
12 ft. x 39.5 in. (3.66 m x 1.00 m)	#256002001123	P04406	12
12 ft. x 48 in. (3.66 m x 1.22 m)	#256002001127	P04407	12
14 ft. x 33 in. (4.27 m x 84 cm)	#B56597	/	0
14 ft. x 42 in. (4.27 m x 1.07 m)	#256002001047	/	0
15 ft. x 42 in. (4.57 m x 1.07 m)	#B56686	/	0
15 ft. x 48 in. (4.57 m x 1.22 m)	#256002001119	/	0
18 ft. x 48 in. (5.49 m x 1.22 m)	#256002001129	/	0

D

Vertical Pool Leg

SIZE	ITEM#	PART CODE	QTY
10 ft. x 30 in. (3.05 m x 76 cm)	#256002001091 #256002001092	/	0
12 ft. x 30 in. (3.66 m x 76 cm)	#256002001094	/	0
12 ft. x 39.5 in. (3.66 m x 1.00 m)	#256002001123	/	0
12 ft. x 48 in. (3.66 m x 1.22 m)	#256002001127	/	0
14 ft. x 33 in. (4.27 m x 84 cm)	#B56597	P61791ASS18	14
14 ft. x 42 in. (4.27 m x 1.07 m)	#256002001047	P61792ASS18	14
15 ft. x 42 in. (4.57 m x 1.07 m)	#B56686	P61792ASS18	15
15 ft. x 48 in. (4.57 m x 1.22 m)	#256002001119	P61794ASS18	15
18 ft. x 48 in. (5.49 m x 1.22 m)	#256002001129	P61799ASS18	18

E

T-connector

SIZE	ITEM#	PART CODE	QTY
10 ft. x 30 in. (3.05 m x 76 cm)	#256002001091 #256002001092	P04404	10
12 ft. x 30 in. (3.66 m x 76 cm)	#256002001094	P04741	12
12 ft. x 39.5 in. (3.66 m x 1.00 m)	#256002001123	P04405	12
12 ft. x 48 in. (3.66 m x 1.22 m)	#256002001127	P04405	12
14 ft. x 33 in. (4.27 m x 84 cm)	#B56597	/	0
14 ft. x 42 in. (4.27 m x 1.07 m)	#256002001047	/	0
15 ft. x 42 in. (4.57 m x 1.07 m)	#B56686	/	0
15 ft. x 48 in. (4.57 m x 1.22 m)	#256002001119	/	0
18 ft. x 48 in. (5.49 m x 1.22 m)	#256002001129	/	0

F

T-connector

SIZE	ITEM#	PART CODE	QTY
10 ft. x 30 in. (3.05 m x 76 cm)	#256002001091 #256002001092	/	0
12 ft. x 30 in. (3.66 m x 76 cm)	#256002001094	/	0
12 ft. x 39.5 in. (3.66 m x 1.00 m)	#256002001123	/	0
12 ft. x 48 in. (3.66 m x 1.22 m)	#256002001127	/	0
14 ft. x 33 in. (4.27 m x 84 cm)	#B56597	P61790ASS18	14
14 ft. x 42 in. (4.27 m x 1.07 m)	#256002001047	P61790ASS18	14
15 ft. x 42 in. (4.57 m x 1.07 m)	#B56686	P61790ASS18	15
15 ft. x 48 in. (4.57 m x 1.22 m)	#256002001119	P61795ASS18	15
18 ft. x 48 in. (5.49 m x 1.22 m)	#256002001129	P61800ASS18	18

G

Pin

SIZE	ITEM#	PART CODE	QTY
10 ft. x 30 in. (3.05 m x 76 cm)	#256002001091 #256002001092	P61783ASS18	22
12 ft. x 30 in. (3.66 m x 76 cm)	#256002001094	P61783ASS18	26
12 ft. x 39.5 in. (3.66 m x 1.00 m)	#256002001123	P61783ASS18	26
12 ft. x 48 in. (3.66 m x 1.22 m)	#256002001127	P61783ASS18	26
14 ft. x 33 in. (4.27 m x 84 cm)	#B56597	P61796ASS18	30
14 ft. x 42 in. (4.27 m x 1.07 m)	#256002001047	P61796ASS18	30
15 ft. x 42 in. (4.57 m x 1.07 m)	#B56686	P61796ASS18	32
15 ft. x 48 in. (4.57 m x 1.22 m)	#256002001119	P61796ASS18	32
18 ft. x 48 in. (5.49 m x 1.22 m)	#256002001129	P61754ASS18	38

H

Footing

SIZE	ITEM#	PART CODE	QTY
10 ft. x 30 in. (3.05 m x 76 cm)	#256002001091 #256002001092	P61785ASS18	10
12 ft. x 30 in. (3.66 m x 76 cm)	#256002001094	P61785ASS18	12
12 ft. x 39.5 in. (3.66 m x 1.00 m)	#256002001123	P61785ASS18	12
12 ft. x 48 in. (3.66 m x 1.22 m)	#256002001127	P61785ASS18	12
14 ft. x 33 in. (4.27 m x 84 cm)	#B56597	P61797ASS18	14
14 ft. x 42 in. (4.27 m x 1.07 m)	#256002001047	P61797ASS18	14
15 ft. x 42 in. (4.57 m x 1.07 m)	#B56686	P61797ASS18	15
15 ft. x 48 in. (4.57 m x 1.22 m)	#256002001119	P61797ASS18	15
18 ft. x 48 in. (5.49 m x 1.22 m)	#256002001129	P61802ASS18	18

I

Pin Gasket

SIZE	ITEM#	PART CODE	QTY
10 ft. x 30 in. (3.05 m x 76 cm)	#256002001091 #256002001092	P61755ASS18	22
12 ft. x 30 in. (3.66 m x 76 cm)	#256002001094	P61755ASS18	26
12 ft. x 39.5 in. (3.66 m x 1.00 m)	#256002001123	P61755ASS18	26
12 ft. x 48 in. (3.66 m x 1.22 m)	#256002001127	P61755ASS18	26
14 ft. x 33 in. (4.27 m x 84 cm)	#B56597	P61755ASS18	30
14 ft. x 42 in. (4.27 m x 1.07 m)	#256002001047	P61755ASS18	30
15 ft. x 42 in. (4.57 m x 1.07 m)	#B56686	P61755ASS18	32
15 ft. x 48 in. (4.57 m x 1.22 m)	#256002001119	P61755ASS18	32
18 ft. x 48 in. (5.49 m x 1.22 m)	#256002001129	P61755ASS18	38

J

Liner

SIZE	ITEM#	PART CODE	QTY
10 ft. x 30 in. (3.05 m x 76 cm)	#256002001091 #256002001092	P04463	1
12 ft. x 30 in. (3.66 m x 76 cm)	#256002001094	P04466	1
12 ft. x 39.5 in. (3.66 m x 1.00 m)	#256002001123	P00824	1
12 ft. x 48 in. (3.66 m x 1.22 m)	#256002001127	P00828	1
14 ft. x 33 in. (4.27 m x 84 cm)	#B56597	P00876	1
14 ft. x 42 in. (4.27 m x 1.07 m)	#256002001047	P04141	1
15 ft. x 42 in. (4.57 m x 1.07 m)	#B56686	P00860	1
15 ft. x 48 in. (4.57 m x 1.22 m)	#256002001119	P00832	1
18 ft. x 48 in. (5.49 m x 1.22 m)	#256002001129	P00866	1

K

Hose Adaptor

SIZE	ITEM#	PART CODE	QTY
10 ft. x 30 in. (3.05 m x 76 cm)	#256002001091 #256002001092	P6H1420ASS16	1
12 ft. x 30 in. (3.66 m x 76 cm)	#256002001094	P6H1420ASS16	1
12 ft. x 39.5 in. (3.66 m x 1.00 m)	#256002001123	P6H1420ASS16	1
12 ft. x 48 in. (3.66 m x 1.22 m)	#256002001127	P6H1420ASS16	1
14 ft. x 33 in. (4.27 m x 84 cm)	#B56597	P6H1420ASS16	1
14 ft. x 42 in. (4.27 m x 1.07 m)	#256002001047	P6H1420ASS16	1
15 ft. x 42 in. (4.57 m x 1.07 m)	#B56686	P6H1420ASS16	1
15 ft. x 48 in. (4.57 m x 1.22 m)	#256002001119	P6H1420ASS16	1
18 ft. x 48 in. (5.49 m x 1.22 m)	#256002001129	P6H1420ASS16	1

L

Cup Holder

SIZE	ITEM#	PART CODE	QTY
10 ft. x 30 in. (3.05 m x 76 cm)	#256002001091 #256002001092	P04411	2
12 ft. x 30 in. (3.66 m x 76 cm)	#256002001094	P04411	2
12 ft. x 39.5 in. (3.66 m x 1.00 m)	#256002001123	/	0
12 ft. x 48 in. (3.66 m x 1.22 m)	#256002001127	/	0
14 ft. x 33 in. (4.27 m x 84 cm)	#B56597	/	0
14 ft. x 42 in. (4.27 m x 1.07 m)	#256002001047	/	0
15 ft. x 42 in. (4.57 m x 1.07 m)	#B56686	/	0
15 ft. x 48 in. (4.57 m x 1.22 m)	#256002001119	/	0
18 ft. x 48 in. (5.49 m x 1.22 m)	#256002001129	/	0

M

Stopper

SIZE	ITEM#	PART CODE	QTY
10 ft. x 30 in. (3.05 m x 76 cm)	#256002001091 #256002001092	P6C1418ASS19	3
12 ft. x 30 in. (3.66 m x 76 cm)	#256002001094	P6C1418ASS19	3
12 ft. x 39.5 in. (3.66 m x 1.00 m)	#256002001123	P6C1418ASS19	3
12 ft. x 48 in. (3.66 m x 1.22 m)	#256002001127	P6C1418ASS19	3
14 ft. x 33 in. (4.27 m x 84 cm)	#B56597	P6C1418ASS19	3
14 ft. x 42 in. (4.27 m x 1.07 m)	#256002001047	P6C1418ASS19	3
15 ft. x 42 in. (4.57 m x 1.07 m)	#B56686	P6C1418ASS19	3
15 ft. x 48 in. (4.57 m x 1.22 m)	#256002001119	P6C1418ASS19	3
18 ft. x 48 in. (5.49 m x 1.22 m)	#256002001129	P6C1418ASS19	2

N

Drain Valve Cap

SIZE	ITEM#	PART CODE	QTY
10 ft. x 30 in. (3.05 m x 76 cm)	#256002001091 #256002001092	P6H1158ASS16	1
12 ft. x 30 in. (3.66 m x 76 cm)	#256002001094	P6H1158ASS16	1
12 ft. x 39.5 in. (3.66 m x 1.00 m)	#256002001123	P6H1158ASS16	1
12 ft. x 48 in. (3.66 m x 1.22 m)	#256002001127	P6H1158ASS16	1
14 ft. x 33 in. (4.27 m x 84 cm)	#B56597	P6H1158ASS16	1
14 ft. x 42 in. (4.27 m x 1.07 m)	#256002001047	P6H1158ASS16	1
15 ft. x 42 in. (4.57 m x 1.07 m)	#B56686	P6H1158ASS16	1
15 ft. x 48 in. (4.57 m x 1.22 m)	#256002001119	P6H1158ASS16	1
18 ft. x 48 in. (5.49 m x 1.22 m)	#256002001129	P6H1158ASS16	1

O

Control Valve

SIZE	ITEM#	PART CODE	QTY
10 ft. x 30 in. (3.05 m x 76 cm)	#256002001091 #256002001092	/	0
12 ft. x 30 in. (3.66 m x 76 cm)	#256002001094	/	0
12 ft. x 39.5 in. (3.66 m x 1.00 m)	#256002001123	/	0
12 ft. x 48 in. (3.66 m x 1.22 m)	#256002001127	/	0
14 ft. x 33 in. (4.27 m x 84 cm)	#B56597	/	0
14 ft. x 42 in. (4.27 m x 1.07 m)	#256002001047	/	0
15 ft. x 42 in. (4.57 m x 1.07 m)	#B56686	/	0
15 ft. x 48 in. (4.57 m x 1.22 m)	#256002001119	/	0
18 ft. x 48 in. (5.49 m x 1.22 m)	#256002001129	P6(H1)510ASS16	1

P

Pool Inlet Strainer

SIZE	ITEM#	PART CODE	QTY
10 ft. x 30 in. (3.05 m x 76 cm)	#256002001091 #256002001092	/	0
12 ft. x 30 in. (3.66 m x 76 cm)	#256002001094	/	0
12 ft. x 39.5 in. (3.66 m x 1.00 m)	#256002001123	/	0
12 ft. x 48 in. (3.66 m x 1.22 m)	#256002001127	/	0
14 ft. x 33 in. (4.27 m x 84 cm)	#B56597	/	0
14 ft. x 42 in. (4.27 m x 1.07 m)	#256002001047	/	0
15 ft. x 42 in. (4.57 m x 1.07 m)	#B56686	/	0
15 ft. x 48 in. (4.57 m x 1.22 m)	#256002001119	/	0
18 ft. x 48 in. (5.49 m x 1.22 m)	#256002001129	P6H1317ASS16	1

A

Top Rail

SIZE	ITEM#	PART CODE	QTY
16 ft. x 48 in. (4.88 m x 1.22 m)	#256002001132	P04737	16
18 ft. x 48 in. (5.49 m x 1.22 m)	#256002001095	P61775ASS18	18
14 ft. x 48 in. (4.27 m x 1.22 m)	#B56445	P05223	14
16 ft. x 48 in. (4.88 m x 1.22 m)	#256002001131	P04739	16
16 ft. x 48 in. (4.88 m x 1.22 m)	#256002001060	P04739	16
18 ft. x 52 in. (5.49 m x 1.32 m)	#256002001066	P05224	18
20 ft. x 52 in. (6.10 m x 1.32 m)	#256002001072	P05224	20
22 ft. x 52 in. (6.71 m x 1.32 m)	#256002001067	P05224	22

B

Vertical Pool Leg

SIZE	ITEM#	PART CODE	QTY
16 ft. x 48 in. (4.88 m x 1.22 m)	#256002001132	P04736	16
18 ft. x 48 in. (5.49 m x 1.22 m)	#256002001095	P61776ASS18	18
14 ft. x 48 in. (4.27 m x 1.22 m)	#B56445	P61343ASS16	14
16 ft. x 48 in. (4.88 m x 1.22 m)	#256002001131	P61343ASS16	16
16 ft. x 48 in. (4.88 m x 1.22 m)	#256002001060	P61343ASS16	16
18 ft. x 52 in. (5.49 m x 1.32 m)	#256002001066	P61352ASS16	18
20 ft. x 52 in. (6.10 m x 1.32 m)	#256002001072	P61352ASS16	20
22 ft. x 52 in. (6.71 m x 1.32 m)	#256002001067	P61352ASS16	22

C

T-connector

SIZE	ITEM#	PART CODE	QTY
16 ft. x 48 in. (4.88 m x 1.22 m)	#256002001132	P04738	16
18 ft. x 48 in. (5.49 m x 1.22 m)	#256002001095	P61777ASS18	18
14 ft. x 48 in. (4.27 m x 1.22 m)	#B56445	P61757ASS18	14
16 ft. x 48 in. (4.88 m x 1.22 m)	#256002001131	P61757ASS18	16
16 ft. x 48 in. (4.88 m x 1.22 m)	#256002001060	P61757ASS18	16
18 ft. x 52 in. (5.49 m x 1.32 m)	#256002001066	P61761ASS18	18
20 ft. x 52 in. (6.10 m x 1.32 m)	#256002001072	P61763ASS18	20
22 ft. x 52 in. (6.71 m x 1.32 m)	#256002001067	P61763ASS18	22

D

Pin

SIZE	ITEM#	PART CODE	QTY
16 ft. x 48 in. (4.88 m x 1.22 m)	#256002001132	P61754ASS18	34
18 ft. x 48 in. (5.49 m x 1.22 m)	#256002001095	P61759ASS18	38
14 ft. x 48 in. (4.27 m x 1.22 m)	#B56445	P61754ASS18	30
16 ft. x 48 in. (4.88 m x 1.22 m)	#256002001131	P61754ASS18	34
16 ft. x 48 in. (4.88 m x 1.22 m)	#256002001060	P61754ASS18	34
18 ft. x 52 in. (5.49 m x 1.32 m)	#256002001066	P61759ASS18	38
20 ft. x 52 in. (6.10 m x 1.32 m)	#256002001072	P61759ASS18	42
22 ft. x 52 in. (6.71 m x 1.32 m)	#256002001067	P61759ASS18	46

E

Footing

SIZE	ITEM#	PART CODE	QTY
16 ft. x 48 in. (4.88 m x 1.22 m)	#256002001132	P61756ASS18	16
18 ft. x 48 in. (5.49 m x 1.22 m)	#256002001095	P61760ASS18	18
14 ft. x 48 in. (4.27 m x 1.22 m)	#B56445	P61756ASS18	14
16 ft. x 48 in. (4.88 m x 1.22 m)	#256002001131	P61756ASS18	16
16 ft. x 48 in. (4.88 m x 1.22 m)	#256002001060	P61756ASS18	16
18 ft. x 52 in. (5.49 m x 1.32 m)	#256002001066	P61760ASS18	18
20 ft. x 52 in. (6.10 m x 1.32 m)	#256002001072	P61760ASS18	20
22 ft. x 52 in. (6.71 m x 1.32 m)	#256002001067	P61760ASS18	22

I

Stopper

SIZE	ITEM#	PART CODE	QTY
16 ft. x 48 in. (4.88 m x 1.22 m)	#256002001132	P6C1418ASS19	2
18 ft. x 48 in. (5.49 m x 1.22 m)	#256002001095	P6C1418ASS19	2
14 ft. x 48 in. (4.27 m x 1.22 m)	#B56445	P6C1418ASS19	3
16 ft. x 48 in. (4.88 m x 1.22 m)	#256002001131	P6C1418ASS19	2
16 ft. x 48 in. (4.88 m x 1.22 m)	#256002001060	P6C1418ASS19	2
18 ft. x 52 in. (5.49 m x 1.32 m)	#256002001066	P6C1418ASS19	2
20 ft. x 52 in. (6.10 m x 1.32 m)	#256002001072	P6C1418ASS19	2
22 ft. x 52 in. (6.71 m x 1.32 m)	#256002001067	P6C1418ASS19	2

F

Pin Gasket

SIZE	ITEM#	PART CODE	QTY
16 ft. x 48 in. (4.88 m x 1.22 m)	#256002001132	P61755ASS18	34
18 ft. x 48 in. (5.49 m x 1.22 m)	#256002001095	P61755ASS18	38
14 ft. x 48 in. (4.27 m x 1.22 m)	#B56445	P61755ASS18	30
16 ft. x 48 in. (4.88 m x 1.22 m)	#256002001131	P61755ASS18	34
16 ft. x 48 in. (4.88 m x 1.22 m)	#256002001060	P61755ASS18	34
18 ft. x 52 in. (5.49 m x 1.32 m)	#256002001066	P61755ASS18	38
20 ft. x 52 in. (6.10 m x 1.32 m)	#256002001072	P61755ASS18	42
22 ft. x 52 in. (6.71 m x 1.32 m)	#256002001067	P61755ASS18	46

J

Drain Valve Cap

SIZE	ITEM#	PART CODE	QTY
16 ft. x 48 in. (4.88 m x 1.22 m)	#256002001132	P6H1158ASS16	1
18 ft. x 48 in. (5.49 m x 1.22 m)	#256002001095	P6H1158ASS16	1
14 ft. x 48 in. (4.27 m x 1.22 m)	#B56445	P6H1158ASS16	1
16 ft. x 48 in. (4.88 m x 1.22 m)	#256002001131	P6H1158ASS16	1
16 ft. x 48 in. (4.88 m x 1.22 m)	#256002001060	P6H1158ASS16	1
18 ft. x 52 in. (5.49 m x 1.32 m)	#256002001066	P6H1158ASS16	1
20 ft. x 52 in. (6.10 m x 1.32 m)	#256002001072	P6H1158ASS16	1
22 ft. x 52 in. (6.71 m x 1.32 m)	#256002001067	P6H1158ASS16	1

G

Liner

SIZE	ITEM#	PART CODE	QTY
16 ft. x 48 in. (4.88 m x 1.22 m)	#256002001132	P04745	1
18 ft. x 48 in. (5.49 m x 1.22 m)	#256002001095	P04425	1
14 ft. x 48 in. (4.27 m x 1.22 m)	#B56445	P04156	1
16 ft. x 48 in. (4.88 m x 1.22 m)	#256002001131	P04747	1
16 ft. x 48 in. (4.88 m x 1.22 m)	#256002001060	P04749	1
18 ft. x 52 in. (5.49 m x 1.32 m)	#256002001066	P04419	1
20 ft. x 52 in. (6.10 m x 1.32 m)	#256002001072	P04421	1
22 ft. x 52 in. (6.71 m x 1.32 m)	#256002001067	P04423	1

K

Control Valve

SIZE	ITEM#	PART CODE	QTY
16 ft. x 48 in. (4.88 m x 1.22 m)	#256002001132	P6(H1)510ASS16	1
18 ft. x 48 in. (5.49 m x 1.22 m)	#256002001095	P6(H1)510ASS16	1
14 ft. x 48 in. (4.27 m x 1.22 m)	#B56445	/	0
16 ft. x 48 in. (4.88 m x 1.22 m)	#256002001131	P6(H1)510ASS16	1
16 ft. x 48 in. (4.88 m x 1.22 m)	#256002001060	P6(H1)510ASS16	1
18 ft. x 52 in. (5.49 m x 1.32 m)	#256002001066	P6(H1)510ASS16	1
20 ft. x 52 in. (6.10 m x 1.32 m)	#256002001072	P6(H1)510ASS16	1
22 ft. x 52 in. (6.71 m x 1.32 m)	#256002001067	P6(H1)510ASS16	1

H

Hose Adaptor

SIZE	ITEM#	PART CODE	QTY
16 ft. x 48 in. (4.88 m x 1.22 m)	#256002001132	P6H1420ASS16	1
18 ft. x 48 in. (5.49 m x 1.22 m)	#256002001095	P6H1420ASS16	1
14 ft. x 48 in. (4.27 m x 1.22 m)	#B56445	P6H1420ASS16	1
16 ft. x 48 in. (4.88 m x 1.22 m)	#256002001131	P6H1420ASS16	1
16 ft. x 48 in. (4.88 m x 1.22 m)	#256002001060	P6H1420ASS16	1
18 ft. x 52 in. (5.49 m x 1.32 m)	#256002001066	P6H1420ASS16	1
20 ft. x 52 in. (6.10 m x 1.32 m)	#256002001072	P6H1420ASS16	1
22 ft. x 52 in. (6.71 m x 1.32 m)	#256002001067	P6H1420ASS16	1

L

Pool Inlet Strainer

SIZE	ITEM#	PART CODE	QTY
16 ft. x 48 in. (4.88 m x 1.22 m)	#256002001132	P6H1317ASS16	1
18 ft. x 48 in. (5.49 m x 1.22 m)	#256002001095	P6H1317ASS16	1
14 ft. x 48 in. (4.27 m x 1.22 m)	#B56445	/	0
16 ft. x 48 in. (4.88 m x 1.22 m)	#256002001131	P6H1317ASS16	1
16 ft. x 48 in. (4.88 m x 1.22 m)	#256002001060	P6H1317ASS16	1
18 ft. x 52 in. (5.49 m x 1.32 m)	#256002001066	P6H1317ASS16	1
20 ft. x 52 in. (6.10 m x 1.32 m)	#256002001072	P6H1317ASS16	1
22 ft. x 52 in. (6.71 m x 1.32 m)	#256002001067	P6H1317ASS16	1

CHOOSE THE CORRECT LOCATION

NOTE: **The pool must be set up on a completely flat and level surface. Please do not install the pool if the surface is inclined or sloped.**

Correct conditions to set up the pool:

- The selected location has to be capable of uniformly supporting the weight for the entire time the pool is installed, moreover the location must be flat and must be cleared of all objects and debris including stones and twigs.
- We recommend positioning the pool away from any objects children could use to climb into the pool.

NOTE: Position the pool near an adequate drainage system to deal with overflow or to discharge the pool.

Incorrect conditions to set up the pool:

- On uneven ground the pool may collapse causing serious personal injury and/or damage to personal property and will void the warranty and prevent any service claims.
- Sand should not be used to create a level base; the ground must be dug out if necessary.
- Directly under overhead power lines or trees. Be sure the location does not contain underground utility pipes, lines or cables of any kind.
- Do not set up the pool on driveways, decks, platforms, gravel or asphalt surfaces. The selected location should be firm enough to withstand the pressure of the water; Mud, sand, soft / loose soil or tar are not suitable.
- Grass or other vegetation under the pool will die and may cause odors and slime to develop, therefore we recommend removing all grass from the selected pool location.
- Avoid areas prone to aggressive plant and weed species that may grow through the ground cloth or liner.

NOTE: Check with your local city council for by-laws relating to fencing, barriers, lighting and safety requirements and ensure you comply with all laws.

NOTE: If have a filter pump, refer to the pump's manual for instructions.

NOTE: The ladder must match the pool size and should to be used only for entering and exiting the pool. It is forbidden to exceed the permitted payload of the ladder. Check regularly if the ladder is properly assembled.

Installation

Bestway Inflatables will not be responsible for damage caused to the pool due to mishandling or failure to follow these instructions.

1. Lay out all parts and check that you have the correct quantities as listed in the components list. If you are missing any part do not assemble the pool, contact Bestway Customers Service.
2. Spread out the pool and make sure the pool is right side up, let it sit exposed to direct sunlight for 1 hour or more so that the pool is more flexible during set up.
3. Place the pool near an adequate drainage system to deal with overflow water and ensure the pool's inlet A and outlet B are correctly positioned to allow your filter pump to connect to a power source.

NOTE: Do not use extension power cords to power your pump.

ATTENTION: Do not drag the pool on the ground, this can damage the pool.

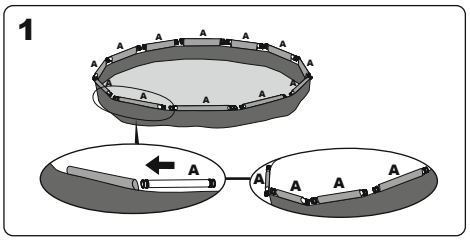

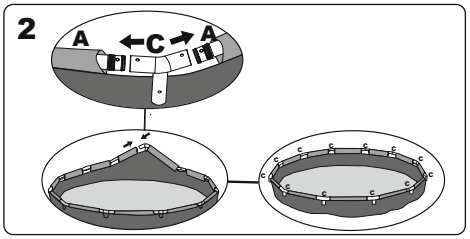

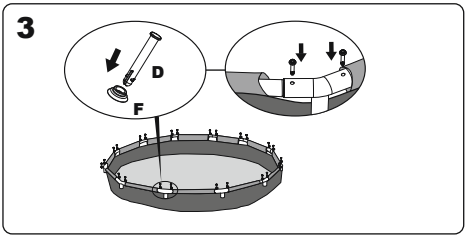

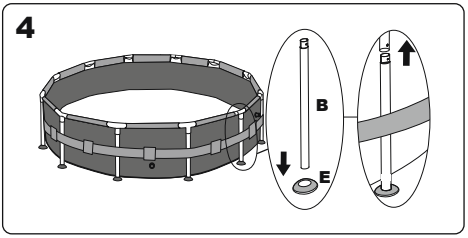

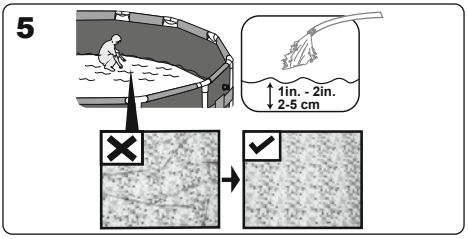

Connection Valve Assembly

For pool with connection valve

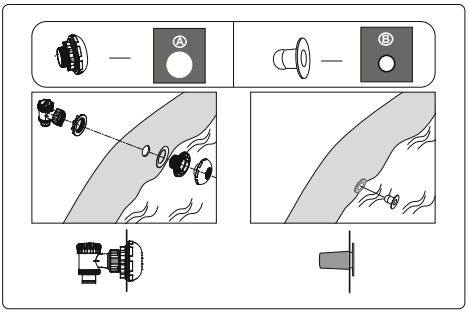

Filling Pool with Water

ATTENTION: Do not leave pool unattended while filling with water.

1. Fill pool until water capacity is 90%, DO NOT OVERFILL as this could cause the pool to collapse. In times of heavy rainfall you may need to empty some of the water to ensure the level is correct.
2. When filling the pool is completed, check that the water is not collecting on any side to ensure the pool is level.

IMPORTANT: If pool is not level, drain water and re-level ground by digging out. Never attempt to move the pool with water in it, serious personal injury or damage to the pool may result.

WARNING: Your pool may contain a great deal of pressure. If your pool has any bulge or uneven side then the pool is not level, the sides may burst and the water may discharge suddenly causing serious personal injury and/or damage to property.

3. Check pool for any leaks at valves or seams, check ground cloth for any evident water loss. Do not add chemicals until this has been done.

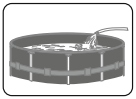

NOTE: In the event of a leak, patch your pool using the underwater adhesive repair patch provided.

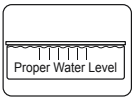

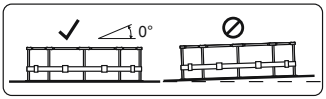

NOTE: Drawings for illustration purpose only. May not reflect actual product. Not to scale.

Pool Maintenance

If you do not adhere to the maintenance guidelines below, your health might be at risk, especially that of your children.

IMPORTANT: If you don't respect the ideal values of the water chemicals the PVC can be damaged and become discolor.

The following table lists the sequence of the tests that should be carried out for the ideal values and possible actions. Regularly check the pH value and chlorine concentration weekly and adjust to the ideal values.

TEST	IDEAL VALUES
pH value	7.4 – 7.6
Cyanuric acid	30 – 50 ppm
Free chlorine	2 – 4 ppm
Chlorine compound	0
Algae	None visible
Calcium hardness	200 – 400 ppm

To keep your pool clean:

1. Contact your local pool supply shop for advice and purchase of chemicals and pH kits. One of the most important factors to increase the life of the liner is to keep continuously clean and healthy water. Please strictly follow the instructions from professional technicians for the water treatment through the use of chemicals.
2. Locate a bucket of water next to pool to clean users' feet before entering pool.
3. Cover the pool when not in use.
4. Skim pool regularly to avoid settled dirt.
5. Check and wash the filter cartridge regularly.
6. Gently clean any scum from below the top ring with a clean cloth.
7. Please be careful in case of rain water, kindly check that the water level is not higher than the expected. If so, YOU HAVE TO DISCHARGE THE EXCESS WATER.

Proper maintenance can maximize the life of your pool.

During the season of use of the swimming pool, the filtration system must be necessarily put into service every day, enough time to assure at least a complete renewal of the volume of water.

ATTENTION: Do not use pump when pool is in use.
During the season of use of the swimming pool, the filtration system must be necessarily put into service every day, enough for a long time to assure at least a complete renewal of the volume of water.

Repair

Check pool for any leaks from valves or seams, check the ground cloth for any evident water loss. Do not add chemicals until this has been done.

NOTE: In the event of a leak, patch your pool using the underwater adhesive repair patch provided.

Dismantling

1. Unscrew the drain valve cap on the outside of the pool counter clockwise and remove.
2. Connect the adaptor to the hose and put the other end of the hose in the area where you are going to drain your pool. (Check local regulations for drainage by-laws).
3. Screw control ring of the hose adaptor clockwise onto the drain valve. The drain valve will be open and water will start to drain automatically.

ATTENTION: Water flow can be controlled with the control ring.

4. When draining is finished, unscrew the control ring to close the valve.
5. Disconnect the hose.
6. Screw the cap back onto the drain valve.
7. Air dry pool.

ATTENTION: Do not leave the drained pool outside.

Storage and Winterization

1. Please remove all the accessories and spare parts of the pool and store them clean and dry.
2. Once pool is completely dry, sprinkle with talcum powder to prevent pool from sticking together, fold pool carefully. If pool is not completely dry, mold may result and will damage the pool liner.
3. Store liner and accessories in a dry place with a moderate temperature between 5ºC / 41ºF and 38ºC / 100ºF.
4. During the rainy season, pool and accessories should be stored as per above instructions also.
5. Improper draining of the pool might cause serious personal injury and/or damage to personal property.
6. We strongly recommend the pool is disassembled during the off season (winter months). Store in a dry location out of children's reach.

NOTE: If your purchased pool set do not have any circulation system, you can purchase separately. But please make sure the equipment can turn over total volume of pool water no less than once every 12 hr. You can check the water capacity on packaging to select suitable circulation system. Pump provided for the circulation of water shall be tested by a Nationally Recognized Testing Laboratory and certified to conform to UL1081.
Also make sure the selected suction outlet sold with the pump should be tested by a Nationally Recognized Testing Laboratory and certified to conform to ASME/ANSI A112.19.8 or its successor standard ANSI/APSP-16, in order to prevent suction entrapment.

For support please visit us at:

bestwaycorp.com/support

©2019 Bestway Inflatables & Material Corp.
All rights reserved/Tous droits réservés/Todos los derechos reservados/Alle Rechte vorbehalten/Tutti i diritti riservati
®™ Trademarks used in some countries under license to/
Marques ®™ utilisées dans certains pays sous la licence de/
Marcas comerciales ®™ utilizadas en algunos países bajo la licencia de/
®™ Die Warenzeichen werden in einigen Ländern verwendet unter Lizenz der/
®™ Marchi utilizzati in alcuni paesi concessi in licenza a
Bestway Inflatables & Material Corp., No.3065 Cao An Road, Shanghai, 201812, China.
Manufactured,distributed and represented in the European Union by/
Fabriqués, distribués et représentés dans l'Union Européenne par/Fabricado, distribuido y representado en la Unión Europea por/
Hergestellt, vertrieben und in der Europäischen Union vertreten von/Prodotto, distribuito e rappresentato nell'Unione Europea da
Bestway (Europe) S.r.l., Via Resistenza, 5, 20098 San Giuliano Milanese (Milano), Italy
Distributed in North America by/Distribués en Amérique du Nord par/Distribuido en Norteamérica por
Bestway (USA) Inc., 3411 E. Harbour Drive, Phoenix, Arizona 85034, United States of America
Tel: +86 21 69135588 (For U.S. and Canada)
Distributed in Latin America by/Distribué en Amérique latine par/Distribuido en Latinoamérica por/Distribuído na América Latina por
Bestway Central & South America Ltda, Salar Ascotan 1282, Parque Enea, Pudahuel, Santiago, Chile
Distributed in Australia & New Zealand by **Bestway Australia Pty Ltd, 98-104 Carnarvon Street, Silverwater, NSW 2128, Australia**
Tel: Australia: (+61) 29 0371 388; New Zealand: 0800 142 101
Exported by/Exporté par/Exportado por/Exportiert von/Esportato da
Bestway (Hong Kong) International Ltd./Bestway Enterprise Company Limited
Suite 713, 7/Floor, East Wing, Tsim Sha Tsui Centre, 66 Mody Road, Kowloon, Hong Kong

www.bestwaycorp.com

Made in China/Fabriqué en Chine/Fabricado en China/Hergestellt in China/Prodotto in Cina