# ASSEMBLY INSTRUCTIONS

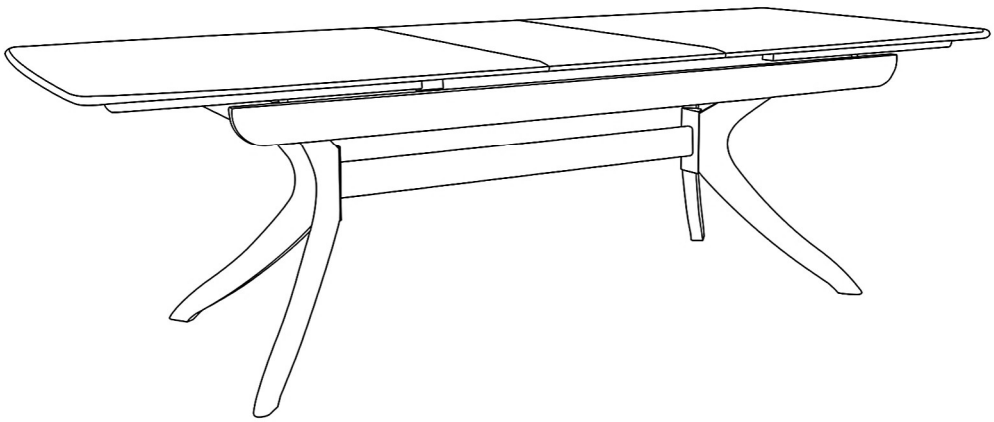

## TOOLS REQUIRED

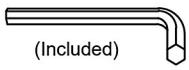


Allen Wrench



2 - People

## ASSEMBLY RATING



EASY ——————— DIFFICULT

The Assembly Rating is a 5-point system showing the level of effort needed to assemble a specific product.

VERSION# 24-09-09

## CHECK BEFORE STARTING

- [ ] **Are you missing anything?**

  Double-check all parts, hardware and accessories listed are all acccounted for.

- [ ] **Should we send any replacements?**

  Are there any irregularities or flaws in the parts? We can send replacements!

- [ ] **Check out our Quick Tips!**

  We recommend reviewing the pre-assembly handouts. Even experts need a refresher now and then!

- [ ] **Prep Time!**

  Please review the assembly instructions and all diagrams prior to assembling.

# PRE ASSEMBLY INTRODUCTION

We understand building ready-to-assemble furniture can be a challenging experience for some. To help avoid confusion, we have provided some helpful tips that may speed up the process.

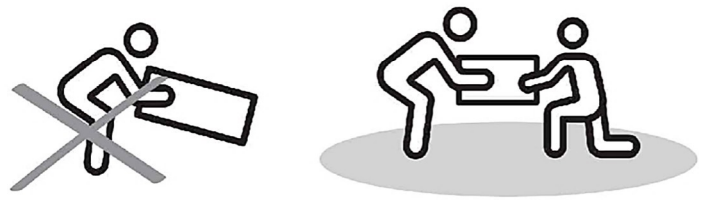

### Teamwork

ALWAYS have at least two people to help with transporting and assembling the product to avoid potential injury and/or damage.

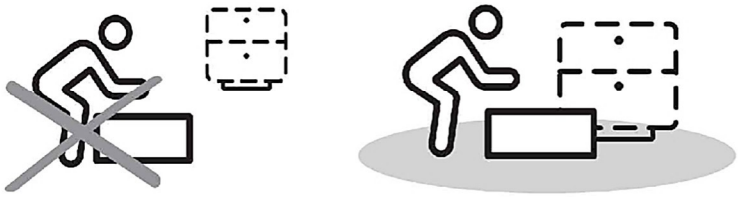

### Suitable Location

Assembling near the area of the intended location is highly recommended.



### Sufficient Space

Make sure you have enough space to move around during the assembly.

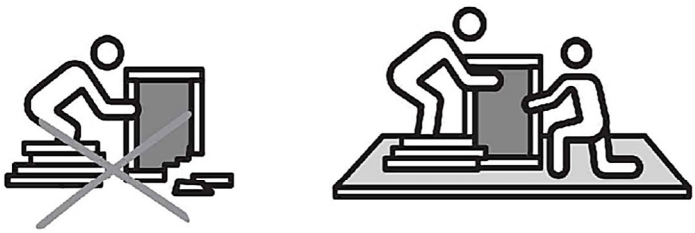

### Avoid Scratches

Use cardboard, blankets or a carpeted area while assembling furniture to prevent to prevent scratches and damages.

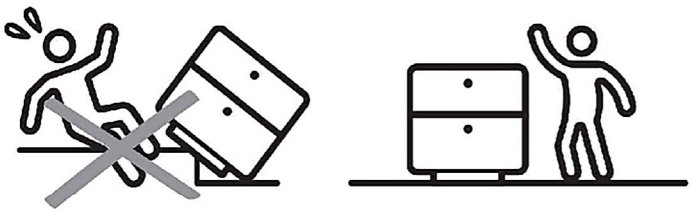

### Flat Surface

Make sure the furniture rests on a flat and level surface with each leg evenly touching the floor.

# ASSEMBLY AND CARE ADVICE

**FAILURE TO FOLLOW THE GUIDELINES BELOW MAY RESULT IN INJURY AND/OR PROPERTY DAMAGE.**



Position each part correctly and insert screws or bolts into their respective holes.

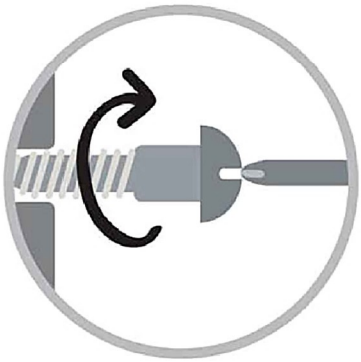

Turn clockwise to tighten and only tighten when step is completed or when instructed to do so.



Use the appropriate hand tools or power tools for assembly. Select steps, such as tightening screws and/or bolts, may require hand tools to avoid causing damage during assembly.



Save the instructions and store any supplied tools for later maintenance.

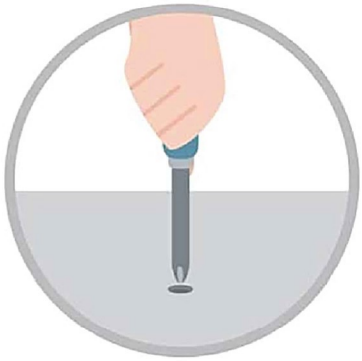

After two weeks, check and tighten any loose hardware and repeat again every six months thereafter.

**IT IS THE USER'S RESPONSIBILITY TO MAINTAIN THE FURNITURE. THE HARDWARE MAY LOOSEN OVER TIME AND MAY CAUSE THE FURNITURE TO BE WOBBLY AND UNABLE TO SUPPORT ITS INTENDED WEIGHT CAPACITY. THIS MAY LEAD TO COLLAPSE AND MAY CAUSE SERIOUS INJURY.**

# DINING TABLE

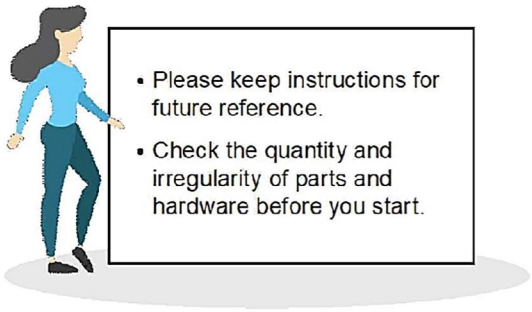

- Please keep instructions for future reference.
- Check the quantity and irregularity of parts and hardware before you start.

## PARTS

1 1pc

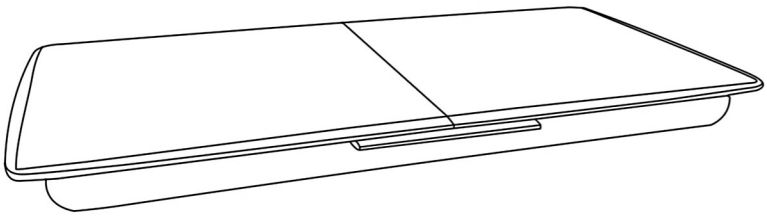

TABLE TOP

2 2pcs

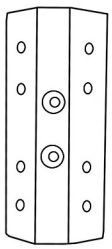

TRIANGLE WOOD

3 1pc

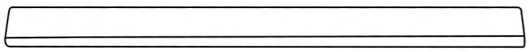

HORIZONTAL WOOD

4 4pcs

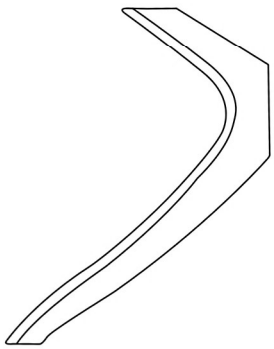

TABLE LEG

## HARDWARE

A 12pcs

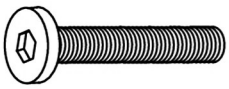

JCBB BOLT
M8 x 45MM

B 16pcs

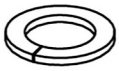

LOCK WASHER
M8

C 16pcs

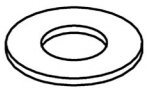

FLAT WASHER
M8

D 1pc



ALLEN KEY
M5

E 4pcs

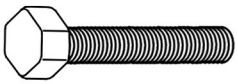

HEX BOLT
M8 x 50MM

F 1pc



SPANNER

G 10pcs

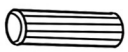

WOOD DOWEL
M10 x 30MM

# ASSEMBLY INSTRUCTIONS

## 1

Part (3) x 1pc
Part (4) x 4pcs
Hardware (G) x 10pcs

Prepare horizontal wood (#3) and leg (#4) by inserting the dowels (#G) into the pre-drilled holes as shown in the diagram.

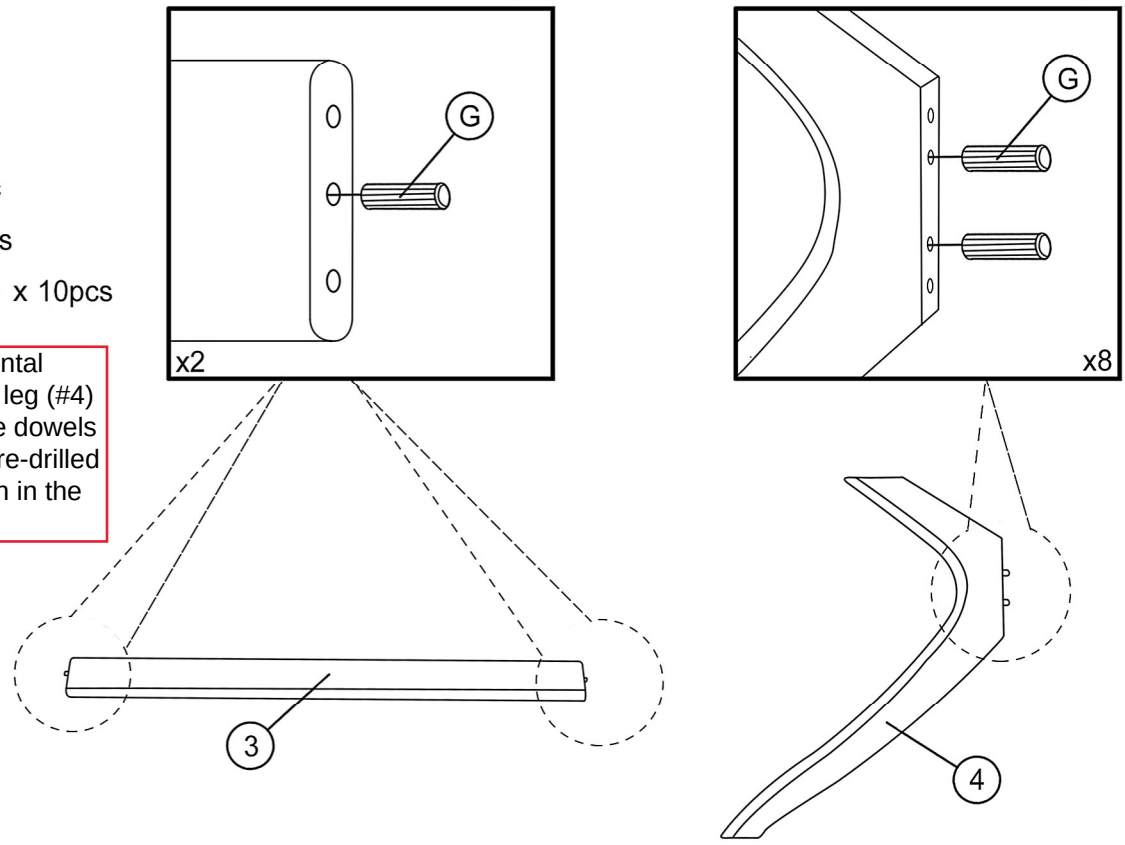


## 2

Part (2) x 2pcs
Part (4) x 4pcs
Hardware (A) x 8pcs
Hardware (B) x 8pcs
Hardware (C) x 8pcs
Hardware (D) x 1pc

Align the legs (#4) to the sides of the triangle wood (#2) and by using allen key (#D) secure using bolt (#A) with lock washer (#B and flat washer (#C).

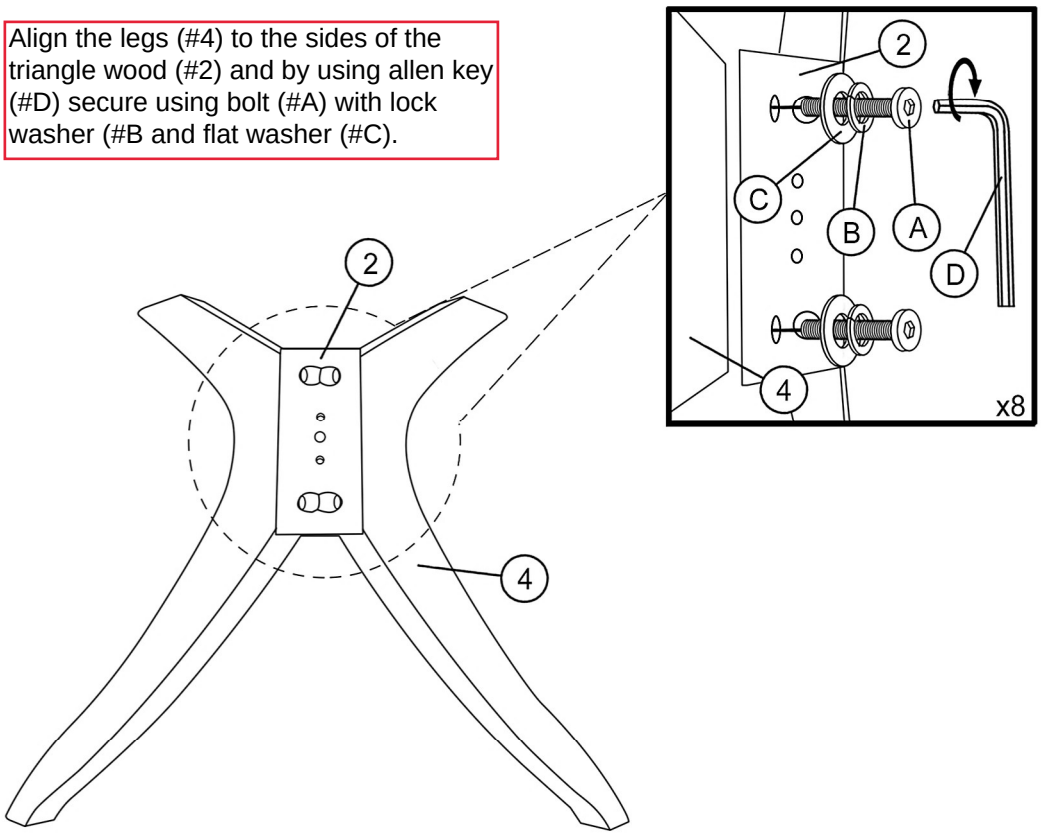

# ASSEMBLY INSTRUCTIONS

## 3

Part (3) x 1pc
Hardware (A) x 4pcs
Hardware (B) x 4pcs
Hardware (C) x 4pcs
Hardware (D) x 1pc

Align the horizontal wood (#3) to the triangle wood (#2) and with allen key (#D) secure by using bolt (#A) with lock washer (#B) and flat washer (#C).

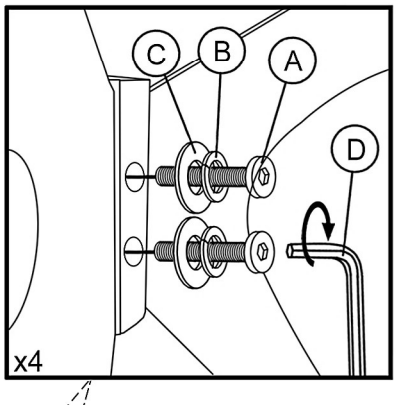


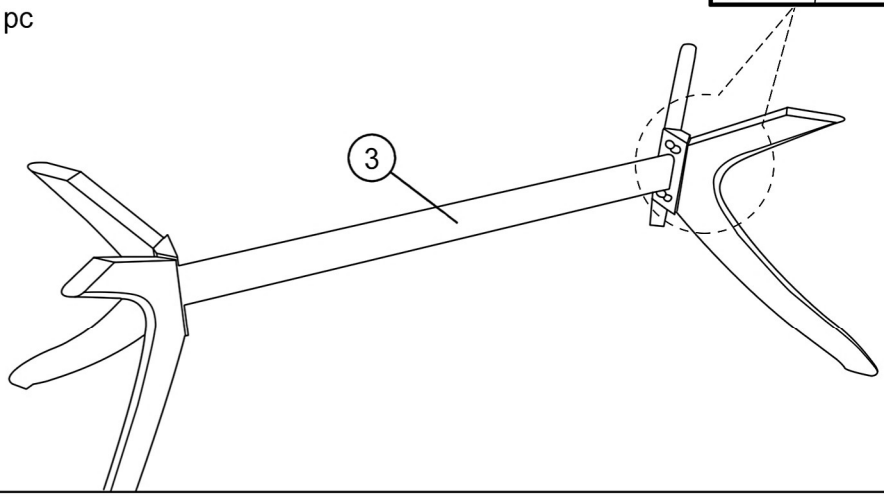


## 4

Part (1) x 1pc
Hardware (E) x 4pcs
Hardware (F) x 4pcs
Hardware (G) x 4pcs
Hardware (H) x 1pc

Align the legs to the table top (#1) and with spanner (#H) secure using hex bolt (#E) with lock washer (#F) and flat washer (#G).

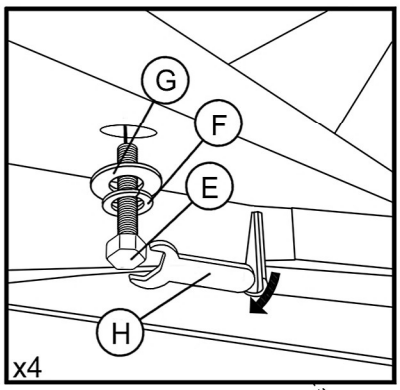


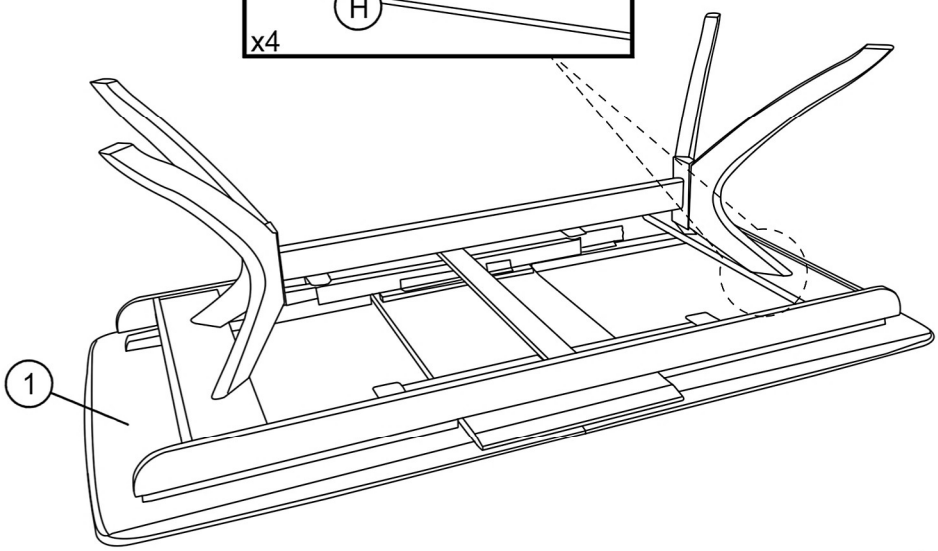

# ASSEMBLY INSTRUCTIONS

5

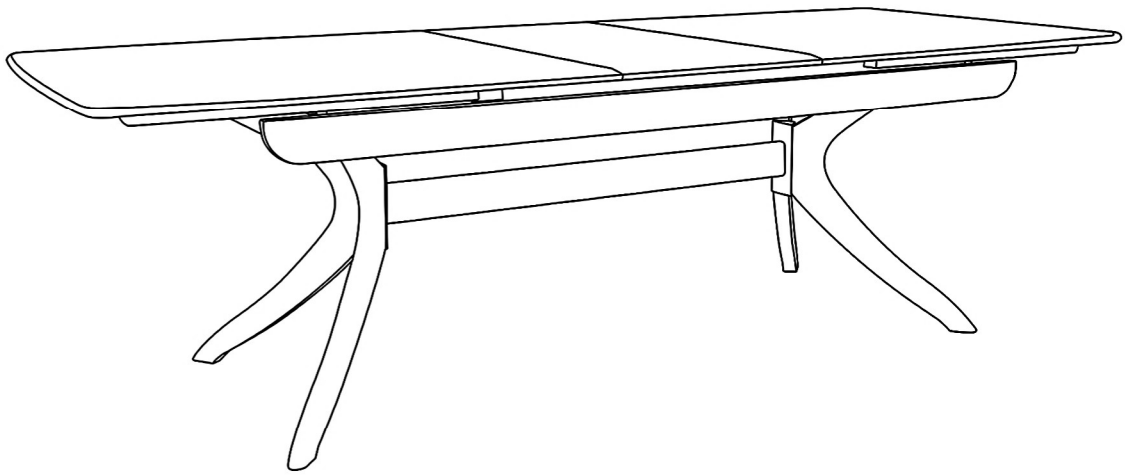

## ASSEMBLY COMPLETED

Please ensure the furniture rests on an even and flat surface. if the product wobbles or feels loose, double-check all bolts and/or screws are properly tightened and secured.

**Keep this handy!**
Please retain this instruction manual and any order-related information for future reference.

**Lift, don't drag!**
To avoid damage to product please always LIFT the product when transporting or adjusting the placement.

This product is intended for RESIDENTIAL USE ONLY and not for commercial use.

# ASSEMBLY INSTRUCTIONS

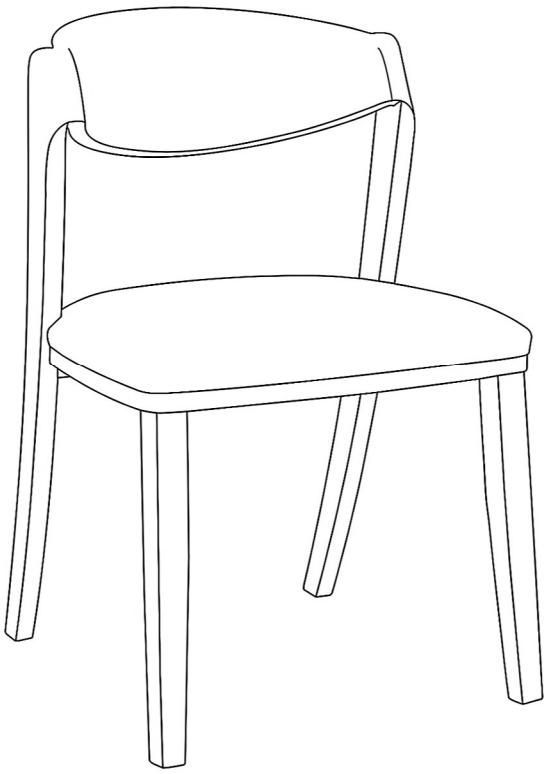

## TOOLS REQUIRED



Screwdriver
(Not Included)

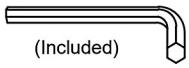

(Included)

Allen Wrench



2 - People

## ASSEMBLY RATING

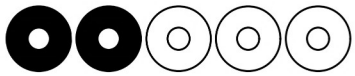

EASY ———— DIFFICULT

The Assembly Rating is a 5-point system showing the level of effort needed to assemble a specific product.

VERSION# 24-09-09

## CHECK BEFORE STARTING

- [ ] **Are you missing anything?**

  Double-check all parts, hardware and accessories listed are all acccounted for.

- [ ] **Should we send any replacements?**

  Are there any irregularities or flaws in the parts? We can send replacements!

- [ ] **Check out our Quick Tips!**

  We recommend reviewing the pre-assembly handouts. Even experts need a refresher now and then!

- [ ] **Prep Time!**

  Please review the assembly instructions and all diagrams prior to assembling.

# PRE ASSEMBLY INTRODUCTION

We understand building ready-to-assemble furniture can be a challenging experience for some. To help avoid confusion, we have provided some helpful tips that may speed up the process.



### Teamwork

ALWAYS have at least two people to help with transporting and assembling the product to avoid potential injury and/or damage.

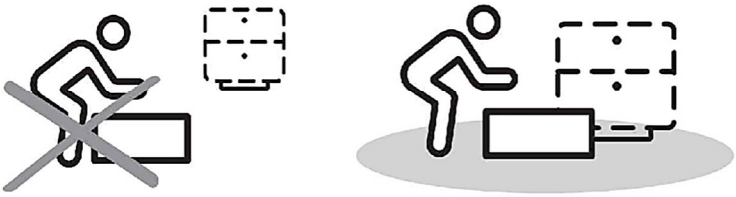

### Suitable Location

Assembling near the area of the intended location is highly recommended.



### Sufficient Space

Make sure you have enough space to move around during the assembly.

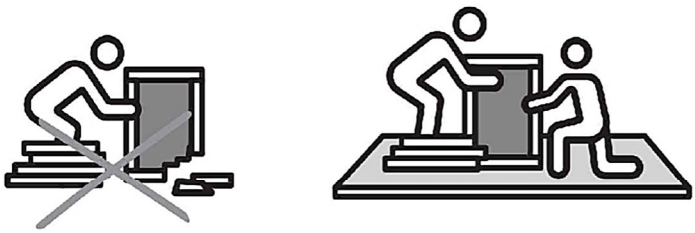

### Avoid Scratches

Use cardboard, blankets or a carpeted area while assembling furniture to prevent to prevent scratches and damages.

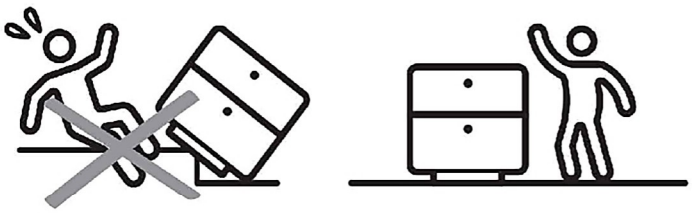

### Flat Surface

Make sure the furniture rests on a flat and level surface with each leg evenly touching the floor.

# ASSEMBLY AND CARE ADVICE

**FAILURE TO FOLLOW THE GUIDELINES BELOW MAY RESULT IN INJURY AND/OR PROPERTY DAMAGE.**



Position each part correctly and insert screws or bolts into their respective holes.

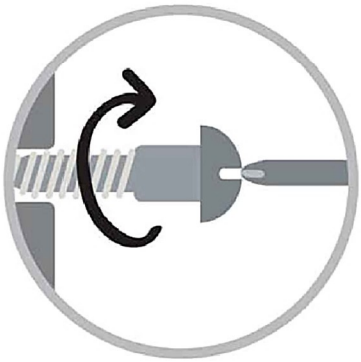

Turn clockwise to tighten and only tighten when step is completed or when instructed to do so.



Use the appropriate hand tools or power tools for assembly. Select steps, such as tightening screws and/or bolts, may require hand tools to avoid causing damage during assembly.



Save the instructions and store any supplied tools for later maintenance.

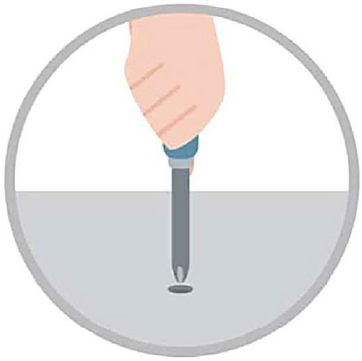

After two weeks, check and tighten any loose hardware and repeat again every six months thereafter.

**IT IS THE USER'S RESPONSIBILITY TO MAINTAIN THE FURNITURE. THE HARDWARE MAY LOOSEN OVER TIME AND MAY CAUSE THE FURNITURE TO BE WOBBLY AND UNABLE TO SUPPORT ITS INTENDED WEIGHT CAPACITY. THIS MAY LEAD TO COLLAPSE AND MAY CAUSE SERIOUS INJURY.**

# DINING SIDE CHAIR

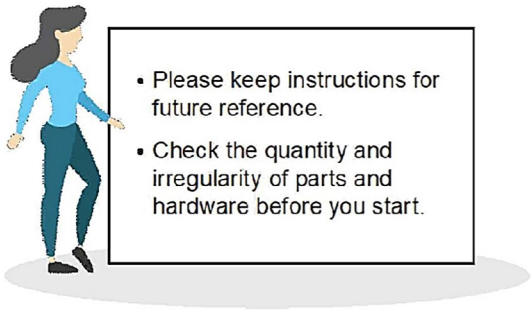

- Please keep instructions for future reference.
- Check the quantity and irregularity of parts and hardware before you start.

## PARTS

1 1pc

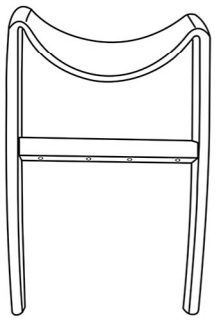

BACK PANEL

2 1pc



SIDE WOOD - LEFT

3 1pc



SIDE WOOD - RIGHT

4 1pc

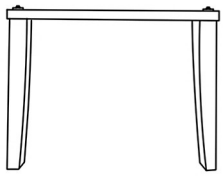

FRONT LEG

5 1pc

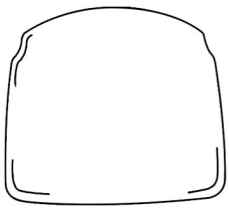

CUSHION SEAT

## HARDWARE

A 6pcs

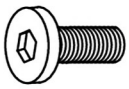

JCBC BOLT
M6 x 35MM

B 4pcs

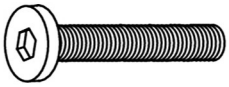

JCBC BOLT
M6 x 50MM

C 10pcs

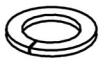

LOCK WASHER
M6

D 10pcs



FLAT WASHER
M6

E 6pcs



CSK SCREW
M4 x 32MM

F 1pc

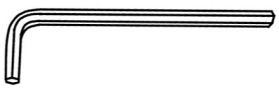

ALLEN KEY
M4

# ASSEMBLY INSTRUCTIONS

## 1

Part (4) x 1pc
Part (5) x 1pc
Hardware (A) x 6pcs
Hardware (C) x 6pcs
Hardware (D) x 6pcs
Hardware (F) x 6pcs

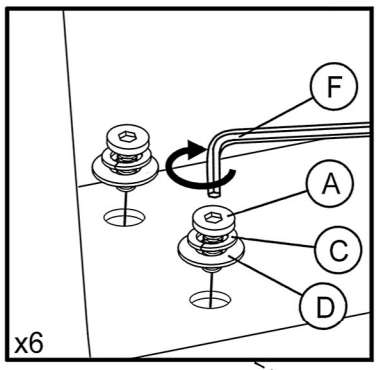


Align front leg (#4) to the cushion seat (#5) and with allen key (#F) secure using bolt (#A) with lock washer (#C) and flat washer (#D).

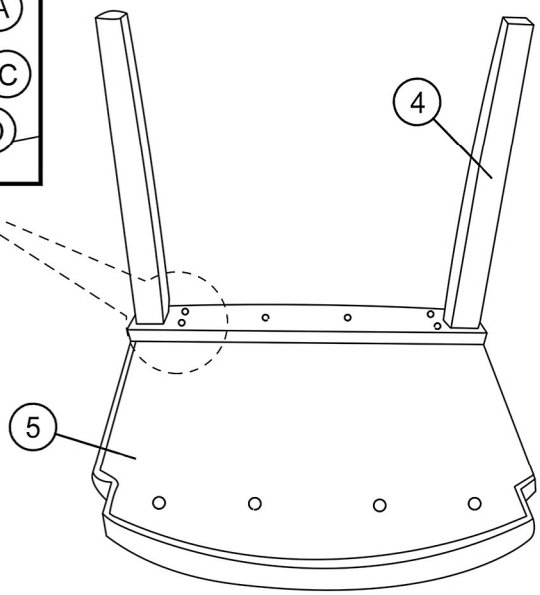


## 2

Part (1) x 1pc
Hardware (B) x 4pcs
Hardware (C) x 4pcs
Hardware (D) x 4pcs
Hardware (F) x 1pc

Align the back panel (#1) to the seat cushion (#5) and by using allen key (#F) secure by using bolt (#B) with lock washer (#C) and flat washer (#D).

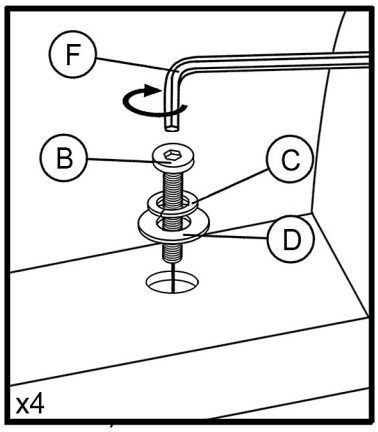


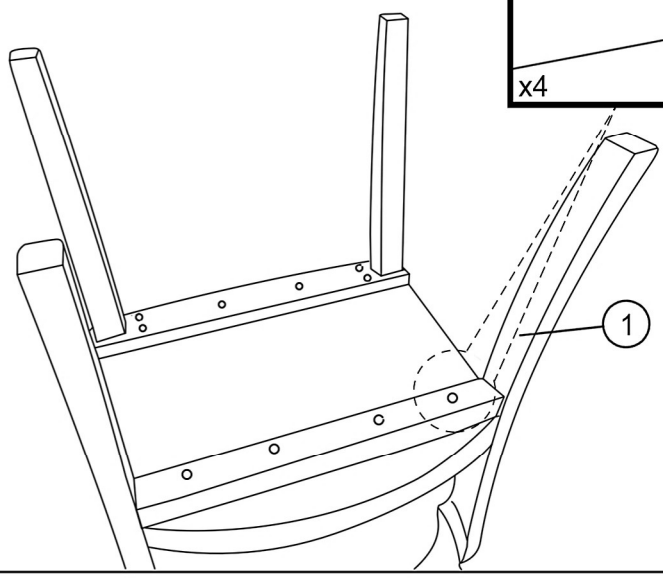

# ASSEMBLY INSTRUCTIONS

## 3

Part (2) x 1pc
Part (3) x 1pc
Hardware (E) x 6pcs

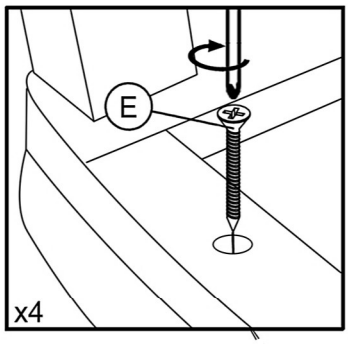


Secure the left and wight side wood (#2) and (#3) onto the seat cushion (#5) by using screw (#E).

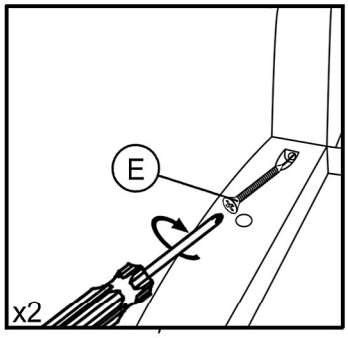


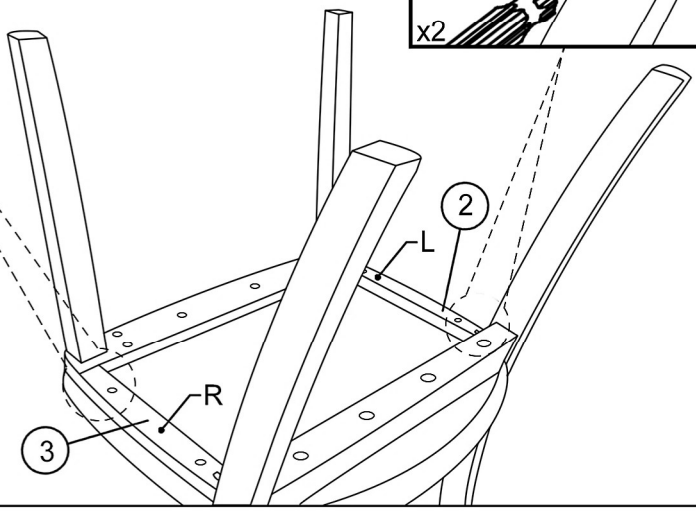


## 4

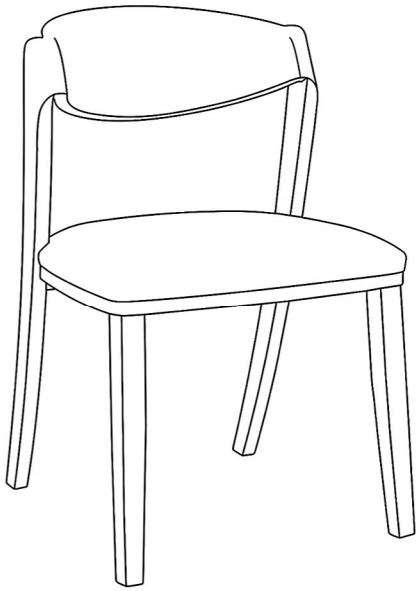

**ASSEMBLY COMPLETED**

Please ensure the furniture rests on an even and flat surface. If the product wobbles or feels loose, double-check all bolts and/or screw are properly tightened and secured.

**Keep this handy!**

Please retain this instruction manual and any order-related information for future reference.

**Lift, don't drag!**

To avoid damage to product please always LIFT the product when transporting of adjusting the placement.

This product is intended for RESIDENTIAL USE ONLY and not for commercial use.