REPAIR SHEET

BRAND	DESCRIPTION
RYOBI	**40V 550 CFM Blower**

MODEL NO.	MFG. NO.
RY40LB01	**106882001**

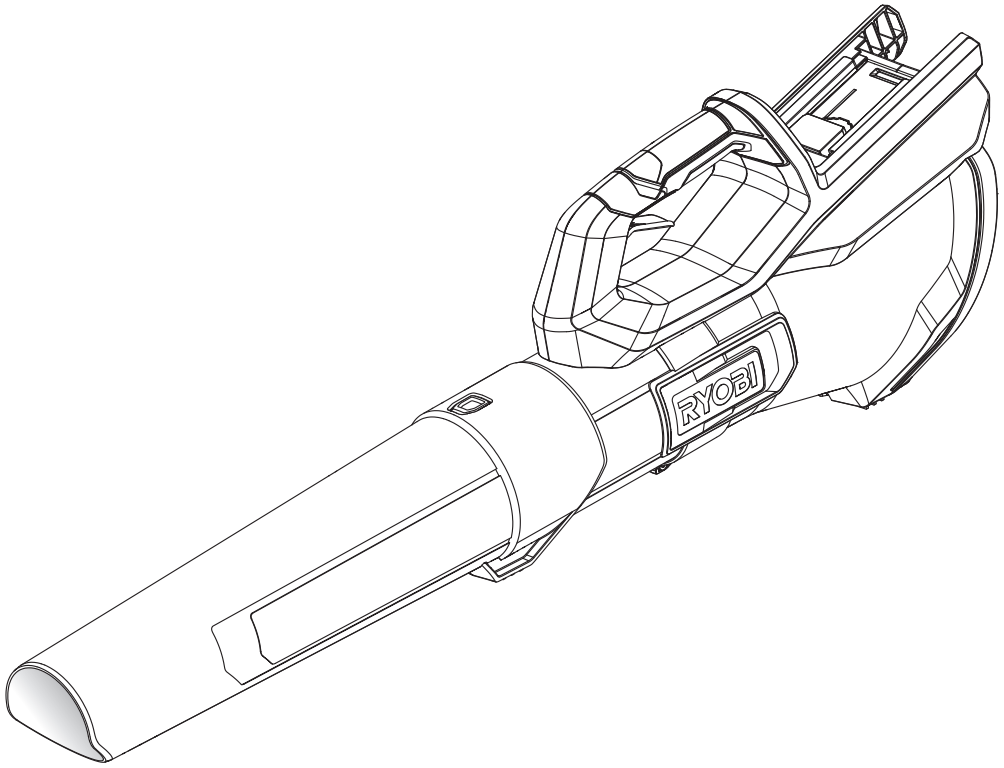

TTI OUTDOOR POWER EQUIPMENT, INC.
P.O. Box 1288, Anderson, SC 29622 ■ 1-800-525-2579 ■ **www.ryobitools.com**

2-14-24 (Rev:01)

The model number and manufacturing location will be found on a label attached to the product. Always mention this information in all communications regarding this product and when ordering parts.

RY40LB01

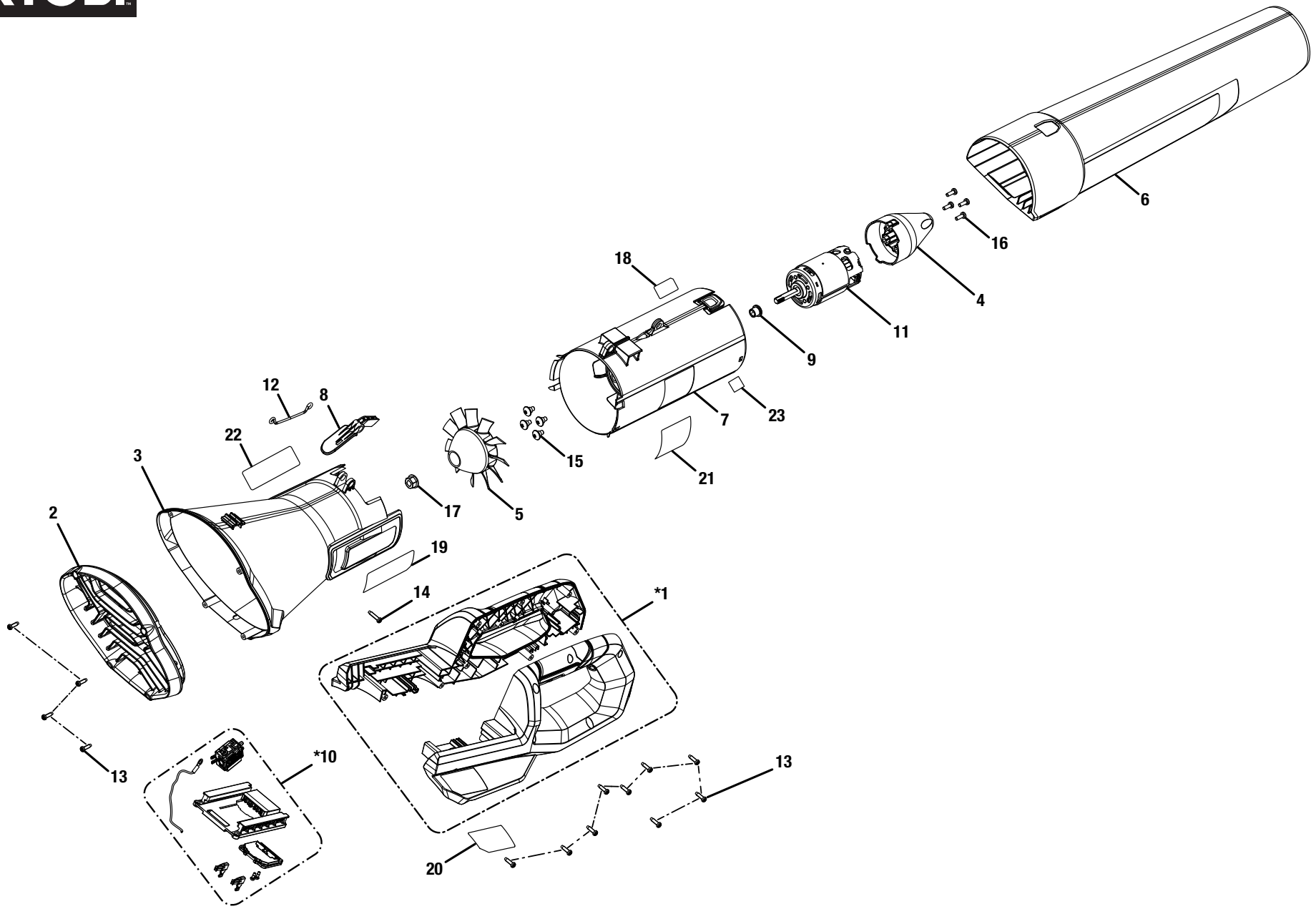

* Part comes as a complete assembly. Individual components of an assembly will not be offered separately, unless listed in the parts list.

RY40LB01

KEY NO.	PART NO.	DESCRIPTION	QTY.
*1	205337002	Handle Assembly (inc. Key No. 20)	1
2	553289001	Inlet Guard	1
3	205337003	Inlet Bell Assembly (Inc. Key Nos. 19 & 22)	1
4	553291001	Nose Cone	1
5	553292001	Fan	1
6	553293001	Tube	1
7	205337004	Motor Mount Assembly (Inc. Key Nos. 18, 21 & 23)	1
8	553296001	Trigger	1
9	686311001	Bushing	1
*10	205337005	Battery Holder & Switch assembly	1
11	742510005	Motor	1
12	699550003	Grounding Strap	1
13	661817001	Screw (M4 x 13.5 mm, T15 Torx. Pan Hd.)	13

KEY NO.	PART NO.	DESCRIPTION	QTY.
14	661864007	Screw (M4 x 18 mm, T15 Torx. Pan Hd.)	1
15	661974001	Screw (M5 x 10 mm, Pan Hd.)	4
16	660925003	Screw (M4 x 12 mm, T20 Torx. Pan Hd.)	4
17	678128002	Nut	1
18	941110307	QR Code Label	1
19	941110308	Data Label	1
20	941110309	Icon Label	1
21	941110310	Warning Label (FR/SP)	1
22	941110312	Ryobi Logo Label	1
23	941110210	Blower 58 dB Label	1
	Not Shown:		
	999000329	Operator's Manual	

*** Part comes as a complete assembly. Individual components of an assembly will not be offered separately, unless listed in the parts list.**

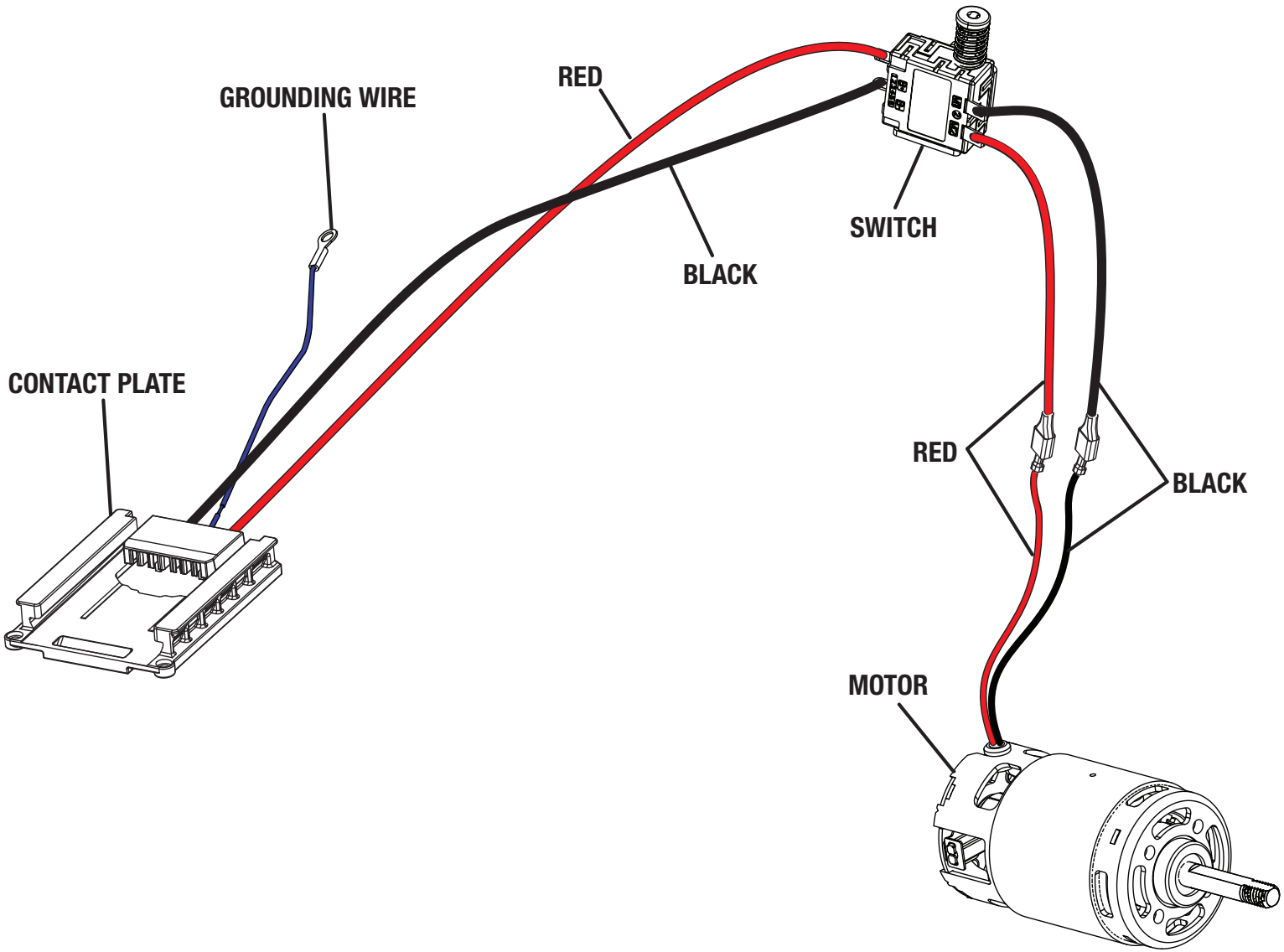

WIRING DIAGRAM

REPAIR SHEET

BRAND	DESCRIPTION
RYOBI	**40 Volt Power Head**

MODEL NO.	MFG. NO.
RY40PH01	**317945002**

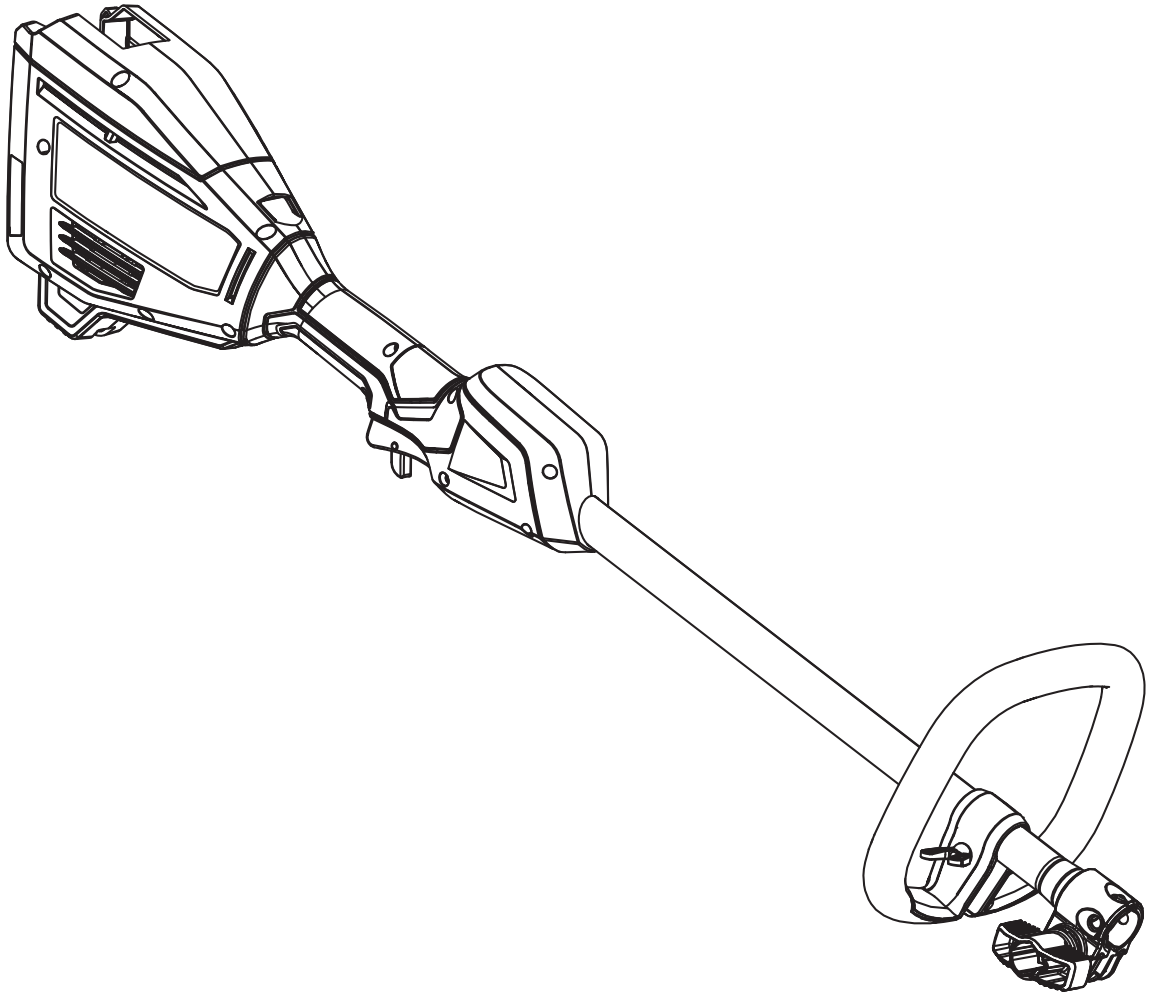

TECHTRONIC INDUSTRIES POWER EQUIPMENT
P.O. Box 1288, Anderson, SC 29622 ■ 1-800-525-2579 ■ **www.ryobitools.com**

1-22-24 (Rev:01)

The model number and manufacturing location will be found on a label attached to the product. Always mention this information in all communications regarding this product and when ordering parts.

RY40PH01

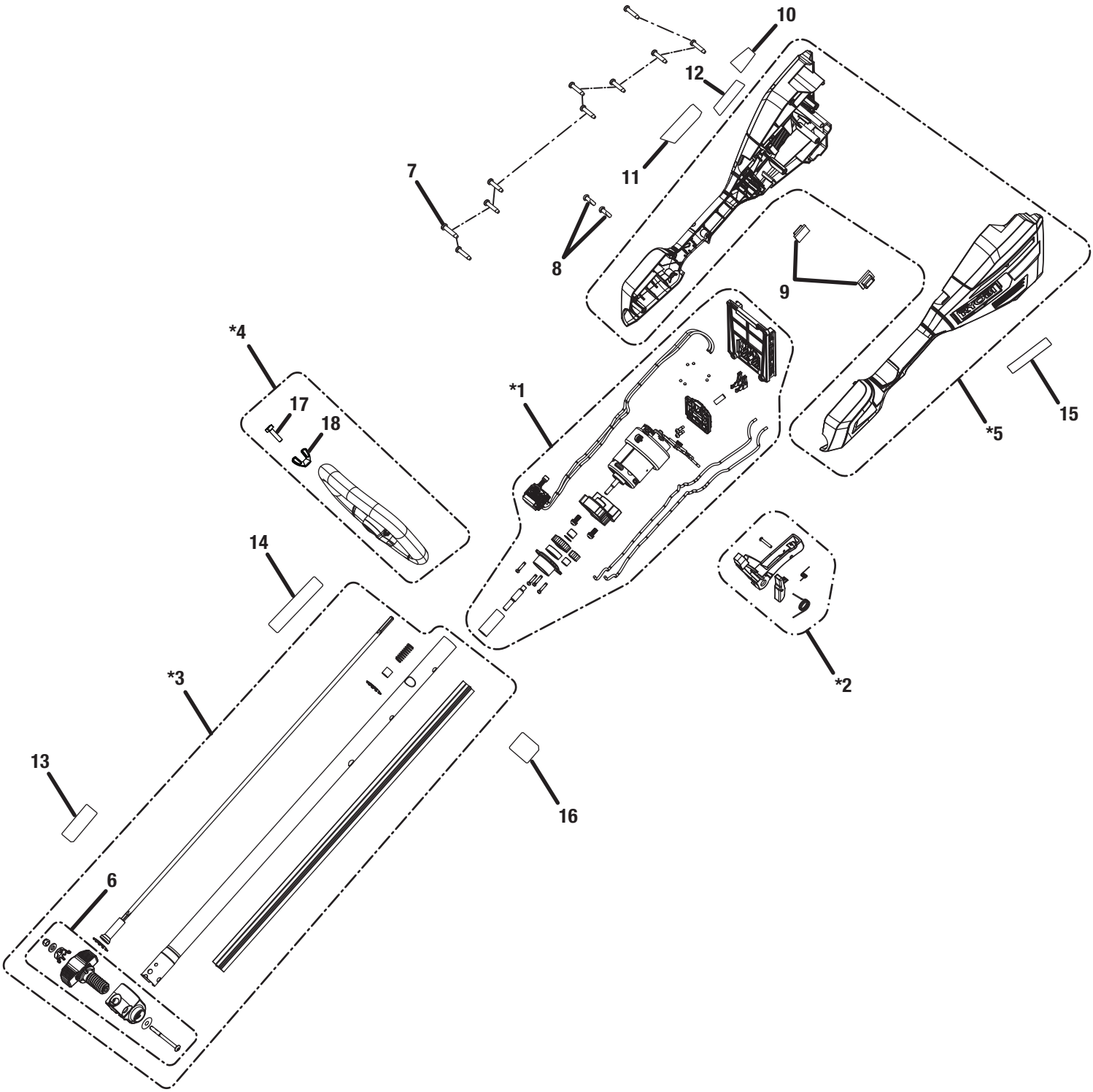

* Part comes as a complete assembly. Individual components of an assembly will not be offered separately, unless listed in the parts list.

RY40PH01

PARTS LIST

KEY NO.	PART NO.	DESCRIPTION	QTY.
*1	205435010	Motor, Gear Box, Switch & Contact Plate Assembly	1
*2	314833001	Switch Trigger Assembly	1
*3	205032008	Boom Assembly (Inc. Key No. 6, 13-14 & 16)	1
*4	308991003	Front Handle Assembly (Inc. Key Nos. 17-18)	1
*5	205004007	Rear Handle Assembly (Inc. Key Nos. 9-12 & 15)	1
6	315386001	Boom Clamp Assembly	1
7	661864007	Screw (M4 x 18 mm, T15 Torx. Pan Hd.)	10
8	660005006	Screw (M3 x 10 mm)	2
9	570115001	Rubber Plate	2
10	941263373	Data Label	1

KEY NO.	PART NO.	DESCRIPTION	QTY.
11	941263370	Warning/Icon Label	1
12	941263369	Battery Statement Label	1
13	941263372	QR Label	1
14	941263388	Attachment Capable Label	1
15	940705496	Ryobi Logo Label	1
16	940779563	Harness Label	1
17	660643008	Screw	1
18	518949001	Wing Nut (1/4-20)	1
	Not Shown:		
	999000282	Operator's Manual	

*** Part comes as a complete assembly. Individual components of an assembly will not be offered separately, unless listed in the parts list.**

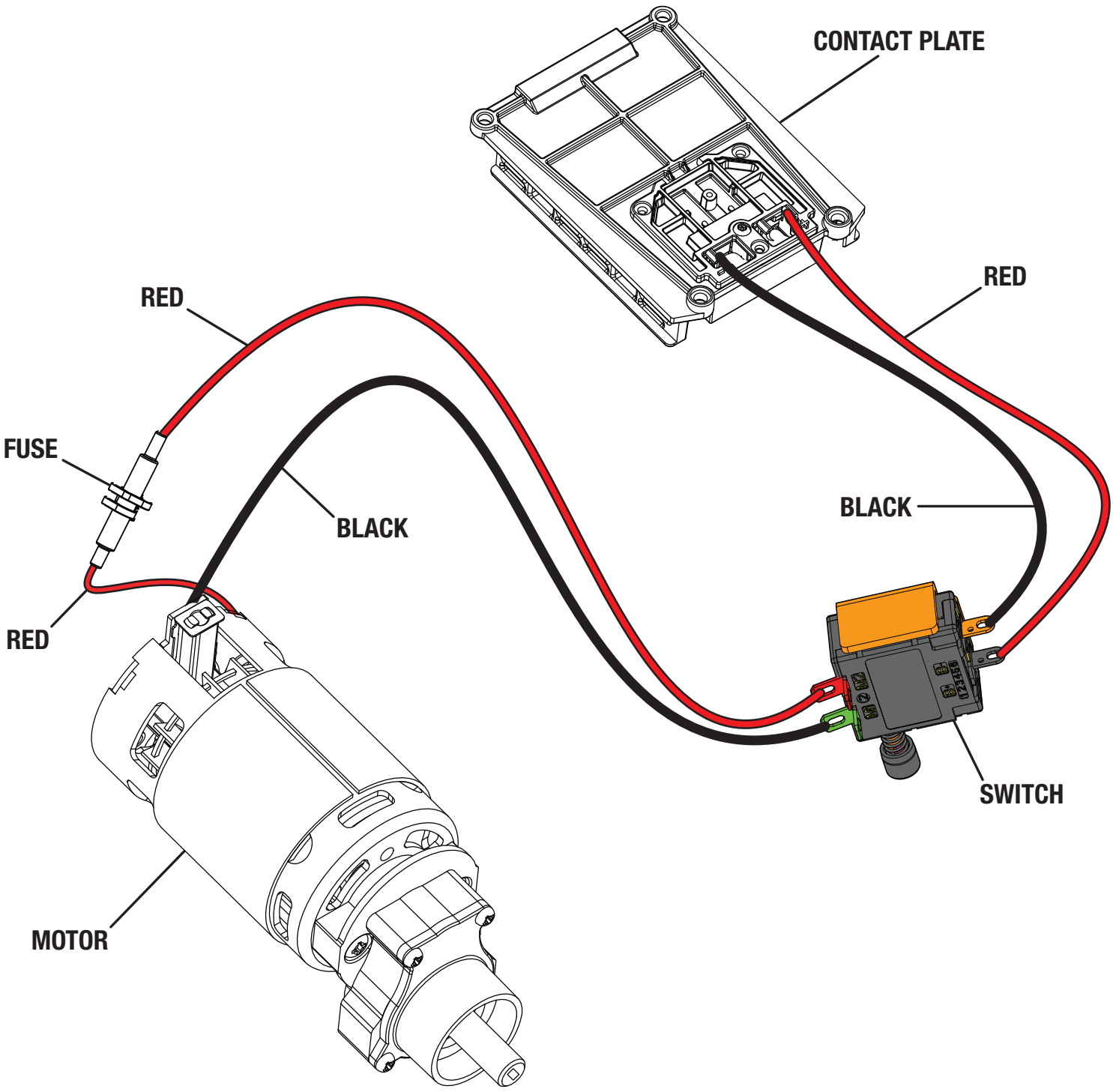

WIRING DIAGRAM

REPAIR SHEET

BRAND

RYOBI

MODEL NO.

A54ST01

MFG. NO.

311247017

DESCRIPTION

EXPAND-IT Straight Shaft Trimmer Attachment

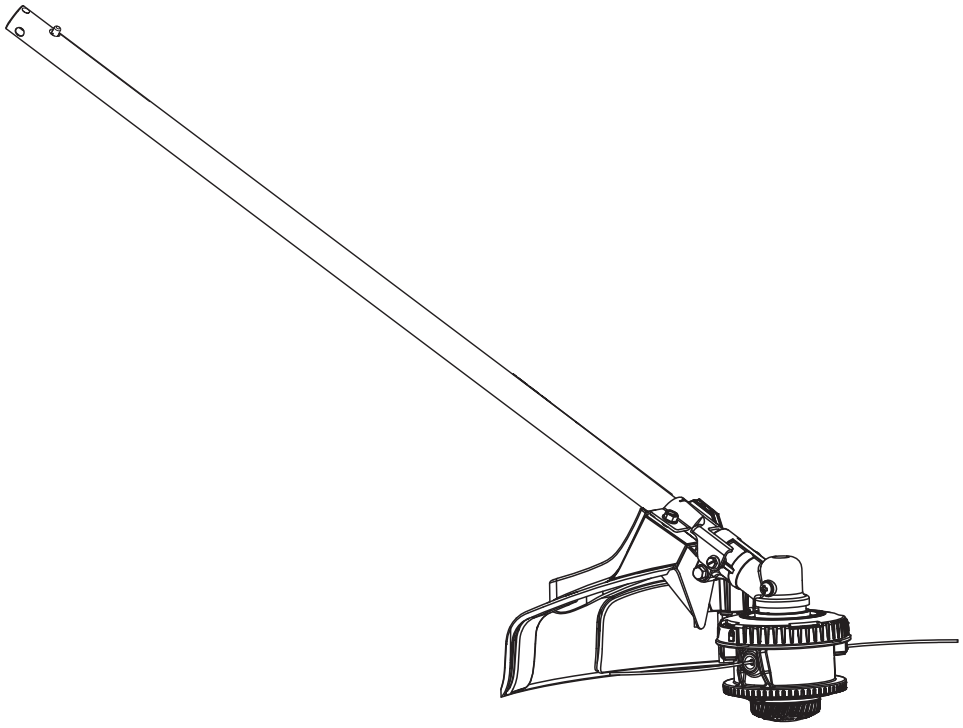

TTI OUTDOOR POWER EQUIPMENT, INC.
P.O. Box 1288, Anderson, SC 29622 ■ 1-800-525-2579 ■ **www.ryobitools.com**

1-12-24 (Rev:01)

The model number and manufacturing location will be found on a label attached to the product. Always mention this information in all communications regarding this product and when ordering parts.

A54ST01

PARTS LIST

KEY NO.	PART NO.	DESCRIPTION	QTY.
1	941588552	Max. Run Time/Performance Label	1
2	205033003	Straight Shaft Assembly (Inc. Key Nos. 3-5)	1
3	941263387	Lower Boom Icon Label	1
4	941851149	Ryobi Expand-it Label	1
5	941263402	Data Label	1
6	660738002	Screw (1/4-20 x 1-1/4 in., Hex Washer Hd.)	1
7	679958001	Compression Spring	1
8	205173008	Grass Deflector Assembly (Inc. Key No. 1 & 9-10)	1
9	638016007	Line Cut-off Blade	1
10	662148001	Screw (M4.5 mm x 1 mm, Pan Hd.)	2
11	660642001	Screw (1/4-20 x 1-1/4 in., Hex Washer Hd.)	1
12	660641001	Screw (10-24 x 5/8 in., Hex Washer Hd.)	1
13	678011001	Flanged Washer	1
14	308210009	Gear Head	1
15	205672002	Bump Feed Trimmer Head Assembly (Inc. Key Nos. 7 & 17)	1
16	638125001	Grass Deflector Clamp	1
17	941097129	String Head Logo Label	1
	Not Shown:		
	999000343	Operator's Manual	

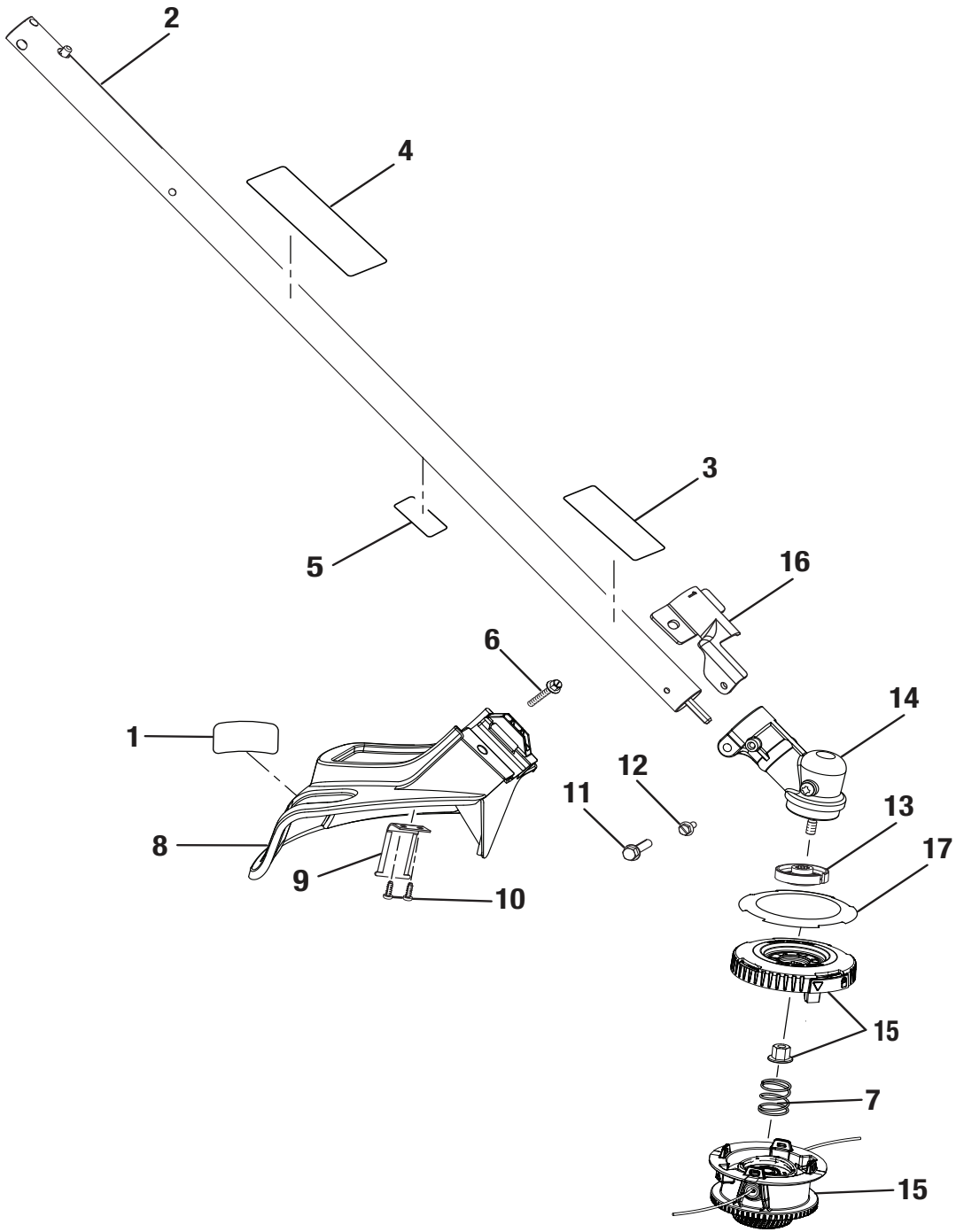

REPAIR SHEET

BRAND		DESCRIPTION
RYOBI		**EXPAND-IT Edger Attachment**
MODEL NO.	MFG. NO.	
RYEDG	**095410109**	

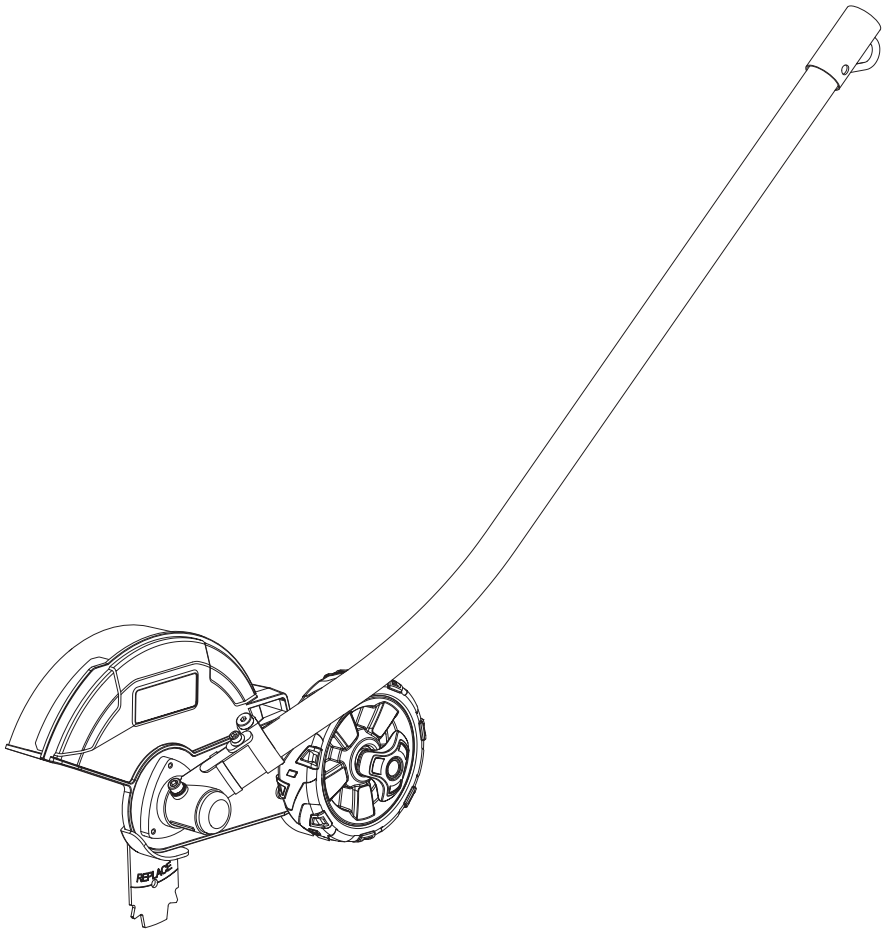

TECHTRONIC INDUSTRIES POWER EQUIPMENT
P.O. Box 1288, Anderson, SC 29622 ■ 1-800-525-2579 ■ **www.ryobitools.com**

7-31-24 (Rev:02)

The model number and manufacturing location will be found on a label attached to the product. Always mention this information in all communications regarding this product and when ordering parts.

RYEDG

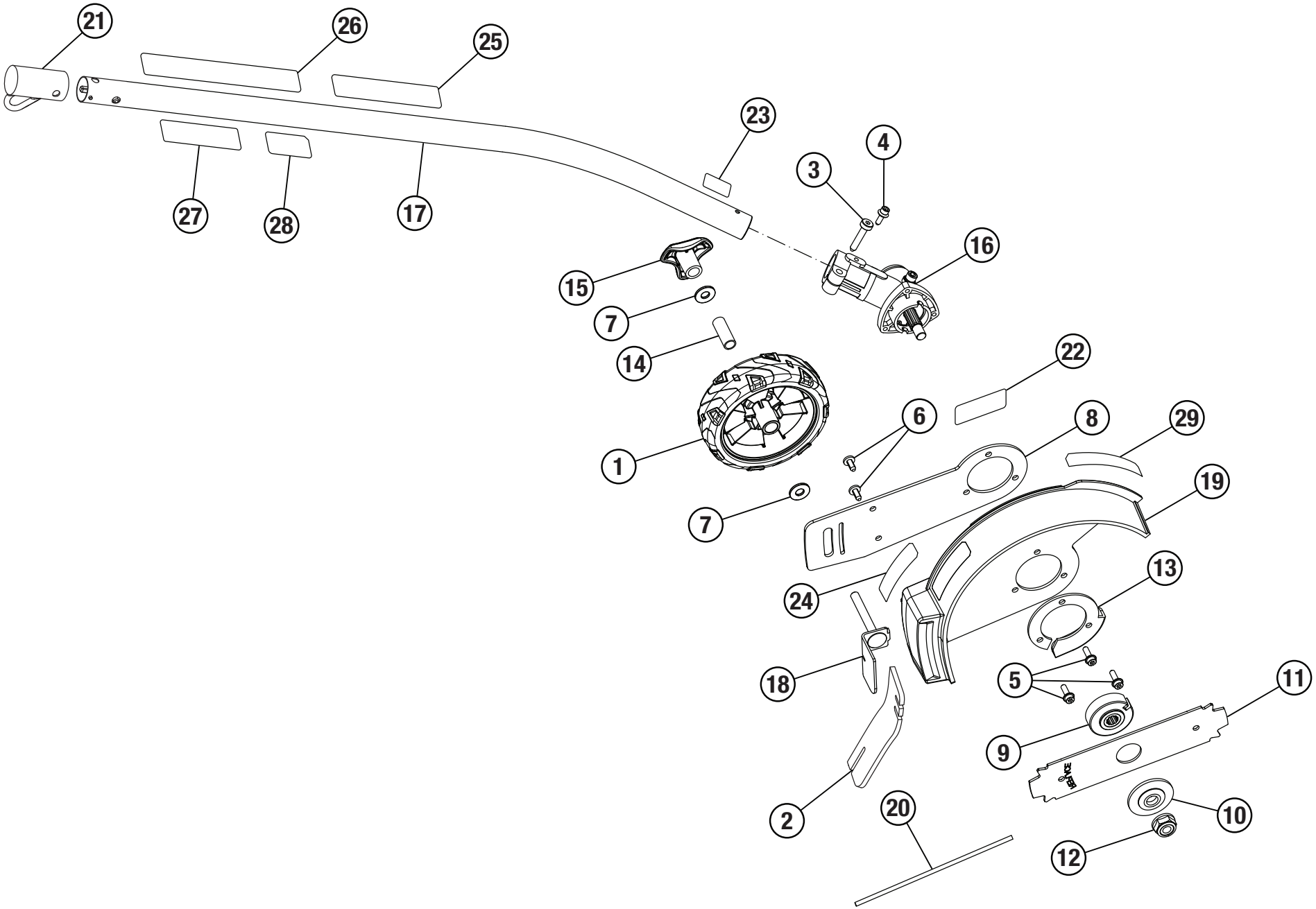
21
26
25
23
4
3
27
28
17
16
15
7
14
22
6
8
29
1
19
7
24
13
18
5
11
9
2
20
10
12

RYOBI

RYEDG

PARTS LIST

KEY NO.	PART NO.	DESCRIPTION	QTY.
1	319305001	Wheel Assembly	1
2	566831001	Mud Flap	1
3	660642002	Screw (1/4-20 x 1.25 in., Hex Recess Hd.)	1
4	660641002	Screw (#10-24 x 0.625 in., Hex. Recess Hd.) w/Conical Washer	1
5	660354001	Screw (M5 x 16 mm, T25 Torx Hd.)	3
6	660621001	Screw (#10-14 x 0.5 in., Double Threaded T25 Torx Hd.)	2
7	636233001	Washer (ID8.5 x OD20.5 x 2t)	2
8	656920001	Wheel Bracket	1
9	613071001	Flange Washer	1
10	613072001	Blade Washer	1
11	638006013	Blade	1
12	678018002	Lock Nut (M10 x 1.25)	1
13	656919001	Skid Plate Washer	1
14	695528002	Spacer Wheel	1
15	541821007	Wing Nut	1
16	312016002	Gear Case Assembly (Inc. Key Nos. 9 - 10, and 12)	1

KEY NO.	PART NO.	DESCRIPTION	QTY.
17	205098003	Boom Assembly (Inc. Key Nos. 21, 23, and 25-28)	1
18	319619001	Foot Block	1
19	205835003	Edger Guard Assembly (Inc. Key Nos. 22, 24, and 29)	1
20	678020001	Holding Pin	1
21	518019004	Hanger Cap	1
22	940705494	Ryobi Logo Label	1
23	941489003	Hot Warning Label	1
24	941110144	Guard Icon Label	1
25	940657026	Icon Warning Label	1
26	941851149	Expand-It Label	1
27	941110145	Data Label	1
28	941110143	QR Label	1
29	940779733	Blade Guide	1
	Not Shown:		
	999000017	Operator's Manual	