

RP0022 ADJUSTABLE CLOSET RODS

APPLICATIONS: Closet & Storage Solutions

CAPACITY: Varies per size

MOUNTING: Direct to wall or cabinetry

FINISHES: White (WT) Platinum (PM)

MATERIAL: Steel

FEATURES:
- 1" diameter
- 22 gauge wall thickness
- Adjusts to spans of 18"-150"
- Durable, scratch-resistant powder coat finish

ITEM	DESCRIPTION	FINISH	UNIT DIMENSIONS (INCHES) L	W	D	UNIT PACK QTY	UNIT WEIGHT LBS	MASTER CARTON DIMENSIONS (INCHES) L	W	D	MASTER PACK QTY	MASTER CARTON LBS	UPC CODE	SCM CODE
ADJUSTABLE ROUND CLOSET RODS WITH SCREWS, 1" DIAMETER, STEEL & PLASTIC, POLY BAGGED														
PB0022-18/30	18" - 30" Adjustable Rod	PM	18.00	1.00	1.00	1	0.80	19.00	10.50	3.87	10	7.70	077355018301	10077355018308
PB0022-30/48	30" - 48" Adjustable Rod	PM	28.00	1.00	1.00	1	1.20	29.00	10.50	3.87	10	11.90	077355030488	10077355030485
PB0022-48/72	48" - 72" Adjustable Rod	PM	41.00	1.00	1.00	1	1.70	42.00	10.50	3.87	10	17.40	077355048728	10077355048725
PB0022-72/96	72" - 96" Adjustable Rod	PM	54.00	1.00	1.00	1	2.20	55.50	10.50	3.87	10	21.60	077355072969	10077355072966
PB0022-72120	72" - 120" Adjustable Rod	PM	66.00	1.00	1.00	1	2.60	66.50	10.50	3.87	10	25.60	077355072129	10077355072126
PB0022-96150	96" - 150" Adjustable Rod	PM	79.00	1.00	1.00	1	3.20	80.00	10.50	3.87	10	31.70	077355096156	10077355096153
PB22-18/30WT	18" - 30" Adjustable Rod	WT	18.00	1.00	1.00	1	0.80	19.00	10.50	3.87	10	7.70	077355022049	10077355022046
PB22-30/48WT	30" - 48" Adjustable Rod	WT	28.00	1.00	1.00	1	1.20	29.00	10.50	3.87	10	11.90	077355022056	10077355022053
PB22-48/72WT	48" - 72" Adjustable Rod	WT	41.00	1.00	1.00	1	1.70	42.00	10.50	3.87	10	17.40	077355022063	10077355022060
PB22-72120WT	72" - 120" Adjustable Rod	WT	66.00	1.00	1.00	1	2.60	66.50	10.50	3.87	10	25.60	077355022087	10077355022084
PB22-9615WT	96" - 150" Adjustable Rod	WT	79.00	1.00	1.00	1	3.20	80.00	10.50	3.87	10	31.70	077355022193	10077355022190
ADJUSTABLE ROUND CLOSET RODS WITH SCREWS, 1" DIAMETER, STEEL														
RP0022-18/30	18" - 30" Adjustable Rod	PM	18.00	1.00	1.00	1	0.80	19.00	10.50	3.87	10	7.70	077355218305	10077355218302
RP0022-30/48	30" - 48" Adjustable Rod	PM	28.00	1.00	1.00	1	1.30	29.50	10.50	3.87	10	13.00	077355230482	10077355230489
RP0022-48/72	48" - 72" Adjustable Rod	PM	41.00	1.00	1.00	1	1.60	42.00	10.50	3.87	10	16.30	077355248722	10077355248729
RP0022-72/96	72" - 96" Adjustable Rod	PM	54.00	1.00	1.00	1	2.20	55.50	10.50	3.87	10	21.60	077355272963	10077355272960
RP0022-72120	72" - 120" Adjustable Rod	PM	66.00	1.00	1.00	1	2.80	66.50	10.50	3.87	10	27.80	077355272123	10077355272120

RP0022 ADJUSTABLE CLOSET RODS

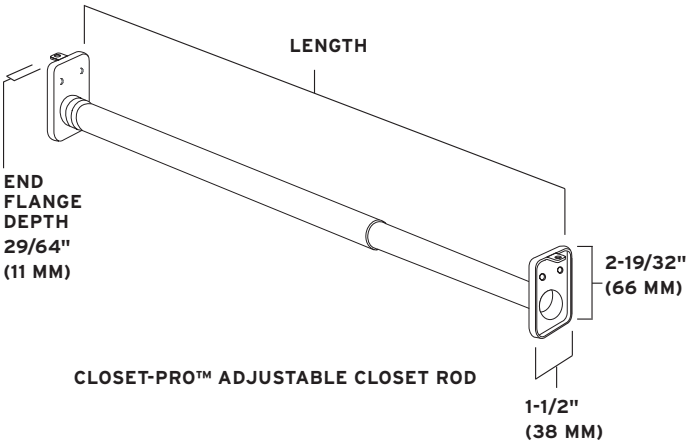

CLOSET-PRO™ ADJUSTABLE CLOSET ROD

INSTALLATION INSTRUCTIONS

1. For maximum loading capacity, closet rods should be mounted into studs or a solid frame.
2. Mark installation locations of flanges and secure them to studs or solid frame.
3. Always install additional supports in center of application if closet rod is longer than 5 feet, or 32" intervals into wall studs if longer than 5 feet.

1. PRODUCT NAME

CLOSET-PRO™ extendable closet rod with end flanges fixed to rod, for use in any closet type setting.

2. MANUFACTURER

Knape & Vogt® Manufacturing Company
2700 Oak Industrial Dr. NE, Grand Rapids, MI USA 49505-6026
616.459.3311 | www.kv.com

3. PRODUCT DESCRIPTION

Basic Use: CLOSET-PRO™ Adjustable Closet Rods are manufactured with end flanges fixed to rod for quick installation and are perfect for any type closet setting.

Composition and Materials: Steel

Sizes

18-30", 30-48", 48-72", 72-96", 72-120", 96-150"

(Some lengths may be available in some finishes).

Finishes: White (WT), Platinum (PM)

4. TECHNICAL DATA

Closet Rods are tested to meet or exceed ANSI performance standards as established by BHMA in the Knape & Vogt (KV) recommended application.

These load limits are intended to be used as general guidelines only, and no warranty – expressed or implied – is made by Knape & Vogt.

Results were obtained by laboratory testing in accordance with ANSI/ BHMA A156.9-2020 performance standard.

Representative testing in a fully configured application is the only way to assure proper performance, durability, and safety.

The aforementioned load limit is intended as a guide only and not as a warranty. Actual load bearing capabilities depend upon the type of cabinet/wall material and use of appropriate mounting fasteners, installation technique, and construction.

Environmental Considerations:

Environment: Excessive humidity, salts, or other chemical agents can corrode the finish and attack metal or plastic components.

Fastening: Inadequate or incorrect fasteners can result in the brackets, flanges and rods pulling loose and causing damage.

Alignment: Improper closet rod alignment can result in a system that is ineffective and unsafe.

5. INSTALLATION

For maximum loading capacity, closet rods should be mounted into studs or a solid frame. Mark installation locations of flanges and secure them to studs or solid frame. Always install additional supports in center of application if closet rod is longer than 5 feet, or 32" intervals into wall studs if longer than 5 feet.

6. AVAILABILITY AND COST

Availability: Knape & Vogt (KV) products are available from stocking distributors and through KV Representatives worldwide.

Cost: Current pricing is available from area KV® Representatives. Please call for the nearest representative at: 1.800.253.1561.

7. WARRANTY

Limited Lifetime Warranty: Knape & Vogt offers its standard Limited Lifetime Warranty to the initial purchaser of commercial products. This warranty covers defects in materials and workmanship which occur during normal use, and the remedy is limited to repair or replacement of defective products, at KV's option. Certain types of defects and damage are excluded from warranty coverage, costs and expenses are not covered, and additional restrictions apply. A copy of the Limited Lifetime Warranty, with all warranty details, limitations and disclaimers, is available on the Customer Care Connection location at www.kv.com or from KV Customer Service, 2700 Oak Industrial Drive, Grand Rapids, MI 49505, 1.800.253.1561.

8. MAINTENANCE

CLOSET-PRO™ adjustable closet rods requires no maintenance. Inspect for proper fit periodically and adjust when necessary. Replace as required or recommended by application.

9. TECHNICAL SERVICES

Knape & Vogt and area representatives can assist with any application. For further information, or for the name of the representative nearest you, please call Knape & Vogt Customer Service: 1.800.253.1561 or visit our website at: www.kv.com.

10. FILING SYSTEMS

Additional product information, data sheets, application sheets, and a full catalog are available upon request from Knape & Vogt.

BHMA | Knape & Vogt shelving products follow the ANSI testing standards established by BHMA.

PRODUCT LITERATURE AVAILABLE AT
WWW.KV.COM >> RESOURCE LIBRARY

2700 Oak Industrial Dr NE
Grand Rapids, MI 49505
www.kv.com | 1.800.253.1561

Knape & Vogt shelving products follow the ANSI testing standards established by BHMA

Knape & Vogt reserves the right to change product specifications at any time without notice and without incurring responsibility for existing units. This information conforms to editorial style prescribed by The Construction Specifications Institute.